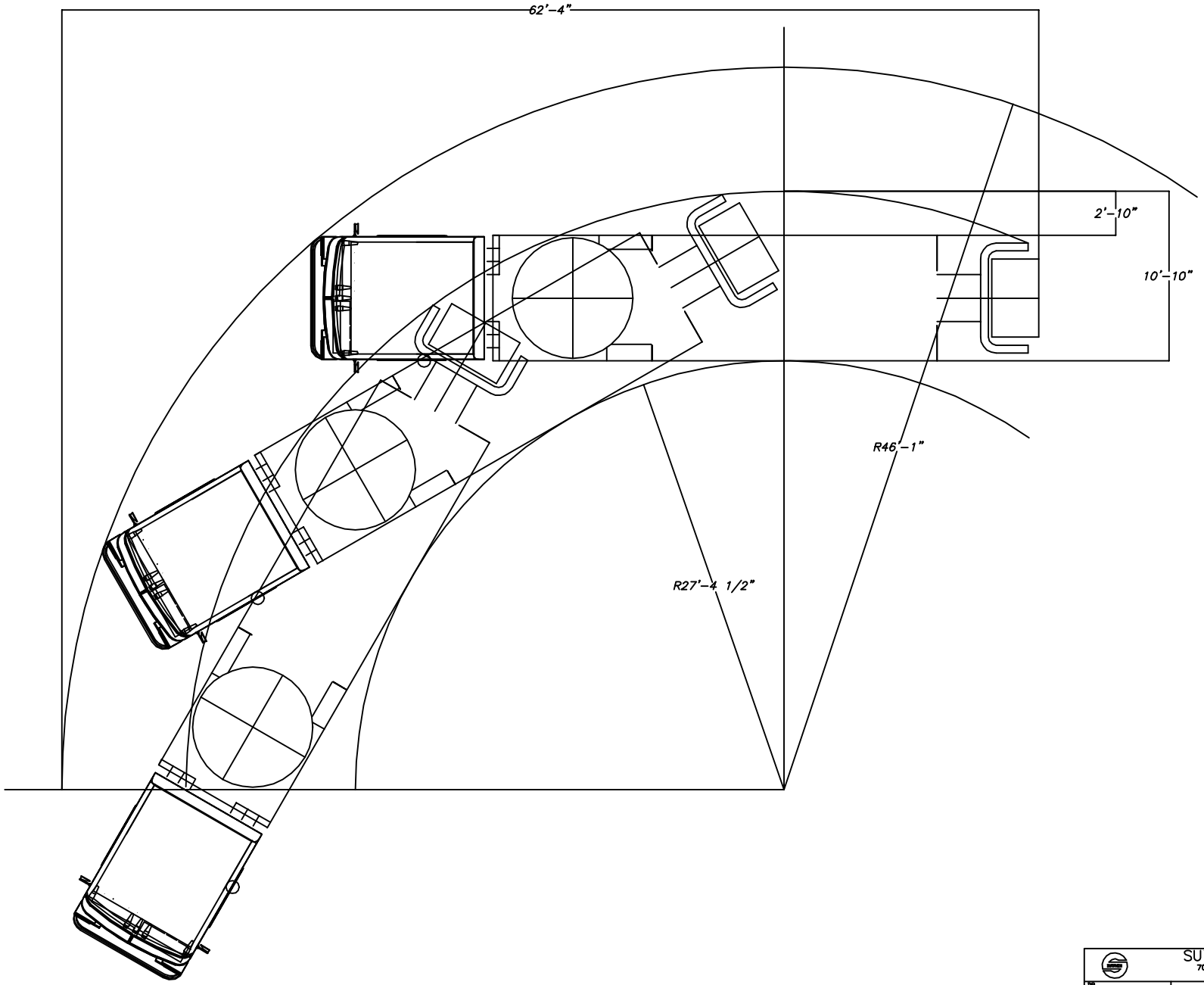

SUTPHEN CORPORATION 7000 COLUMBUS-MARYSVILLE ROAD AMLIN, OHIO 43002			
DR. T. STITES	SUTPHEN 258" W.B. 95 PLATFORM		WEIGHT
DATE 9/22/00			DWG. NO. 258TURN95
SCALE NONE	TOL.	MAT'L.	