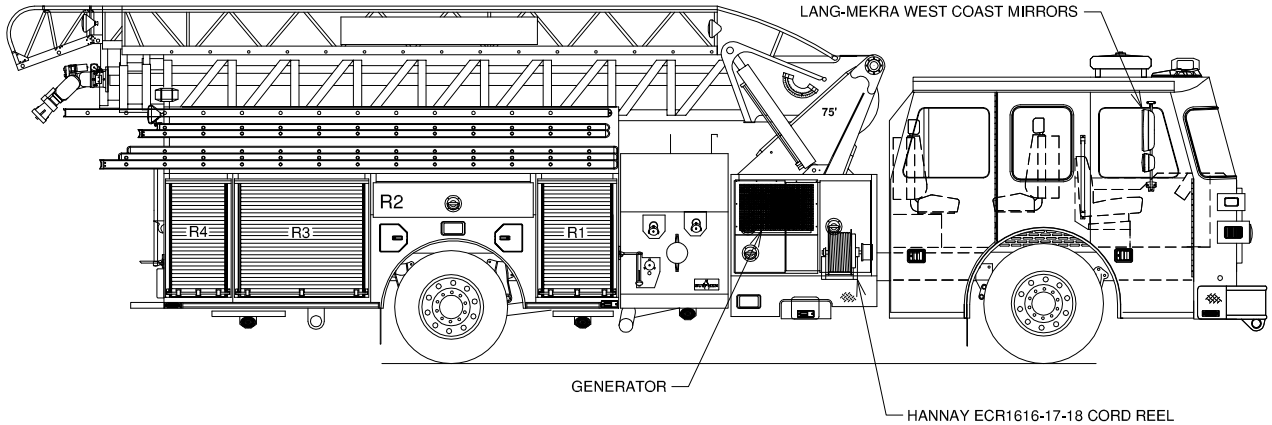

WHELEN FN72QLED LIGHTBAR

COMP'T	DIMENSIONS
L1	30"W x 60"H x 20"D
L2	60"W x 30"H x 20"D
L3	50"W x 60"H x 20"D
L4	25"W x 60"H x 20"D
R1	30"W x 45"H x 25"D
R2	60"W x 15"H x 25"D
R3	50"W x 45"H x 25"D
R4	25"W x 45"H x 25"D
A1	53"W x 30"H x 40"D

197 cubic feet of compartment space
80 cubic feet of hosebed
2 crosslays of 300 of 1 3/4" each
Up to 500 gallon tank
Quint ground ladders

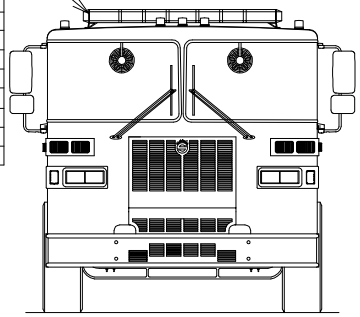

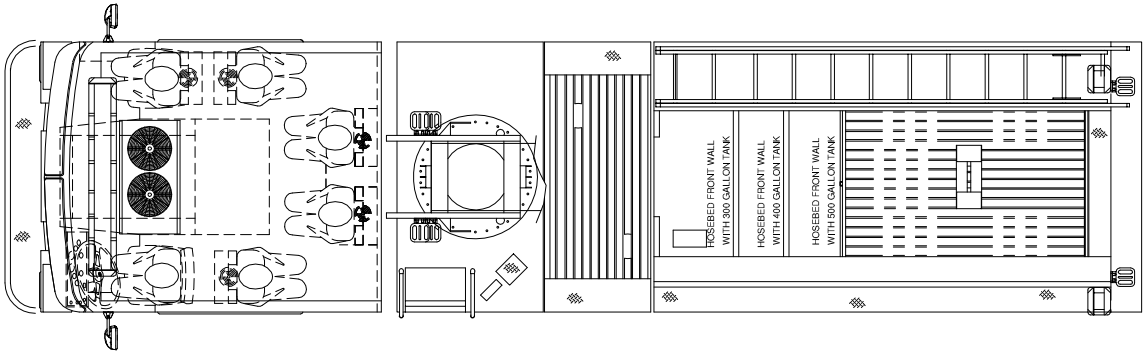

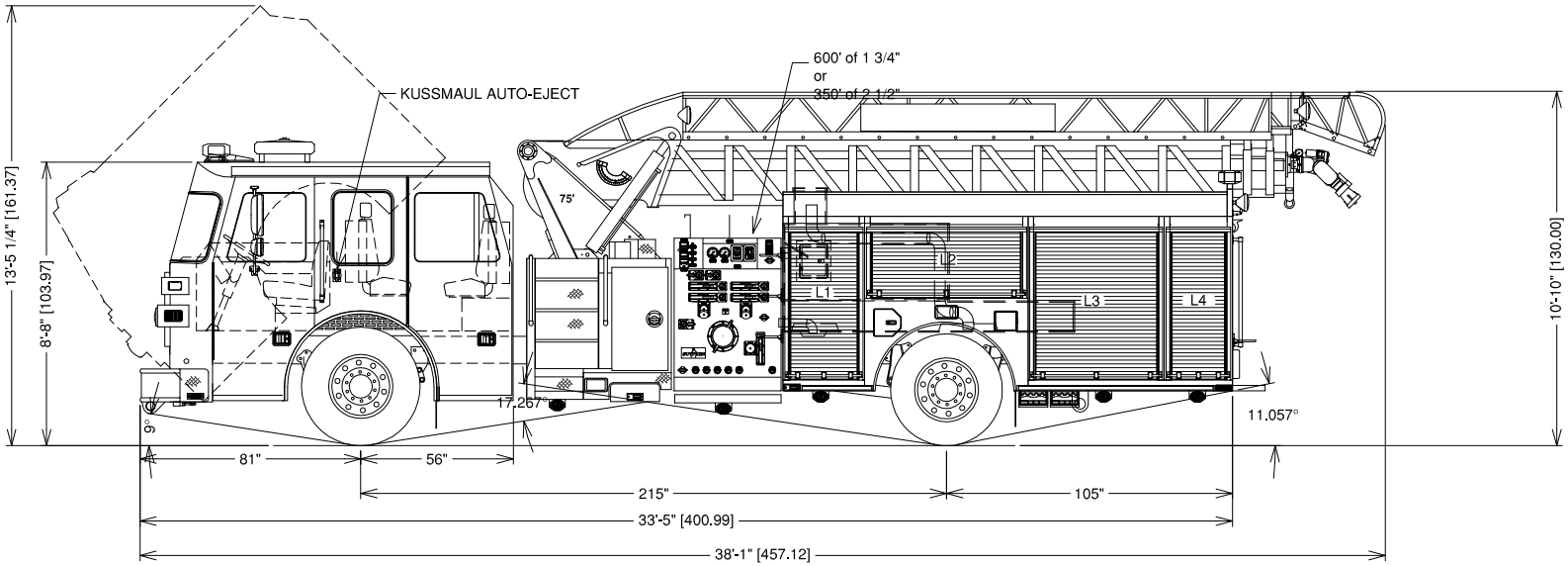

ALCO-LITE QUINT LADDER COMPLIMENT
FL-1 10' FOLDING
PRL-16 16' ROOF
PEL-24 24' 2-SECTION
PEL-35 35' 3-SECTION

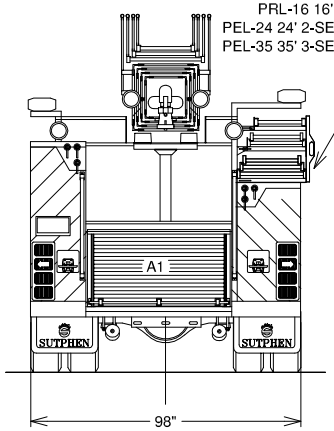

REVISIONS

REV	BY	DATE	DESCRIPTION	REV	BY	DATE	DESCRIPTION

Proprietary data is included in the information disclosed herein and is the sole property of SUTPHEN TOWERS INCORPORATED. This information is submitted in confidence and neither this document nor the information disclosed herein shall be reproduced or transferred to other documents or disclosed to others for manufacturing or for any other purpose except as specifically authorized in writing by SUTPHEN TOWERS INCORPORATED.

SUTPHEN TOWERS INCORPORATED
4500 SUTPHEN COURT (614)876-1262
HILLIARD, OHIO 43026 (614)876-3073 (FAX)

FIRE DEPARTMENT
CITY, STATE
MFR TOWER 70' PLATFORM (NORMAL PROFILE)
RESCUE BODY, LEFT HIGH SIDE, RIGHT LOW SIDE

DRN BY	DATE	SIZE	SCALE	DWG NO.	REV
XXX	YYYYMMDD	C	NTS	SA75	-
CHKD BY	DATE	CONSTRUCTION APPROVAL DRAWING			SHEET 1 OF 1