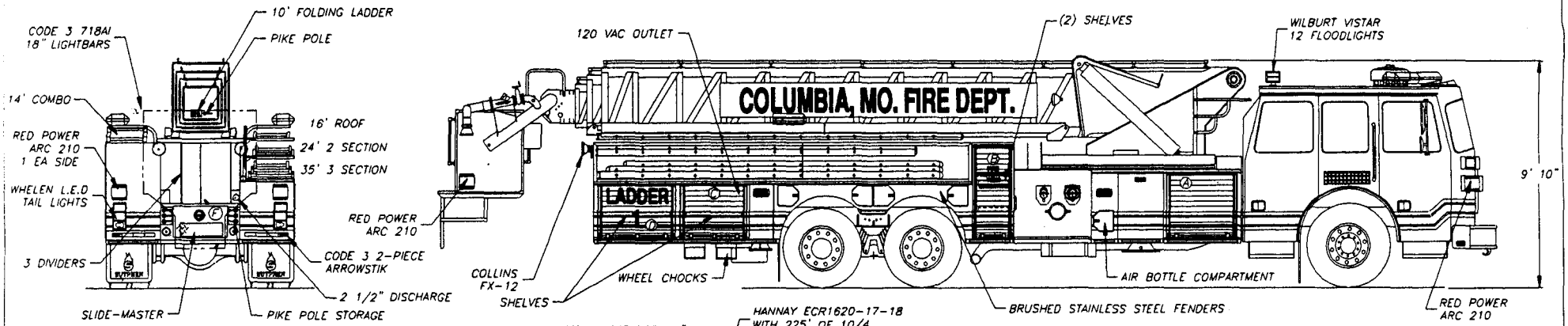

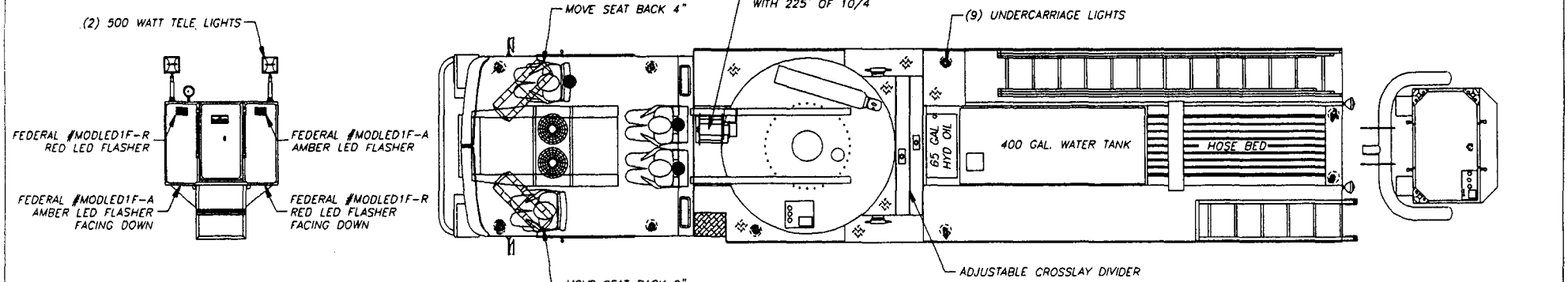

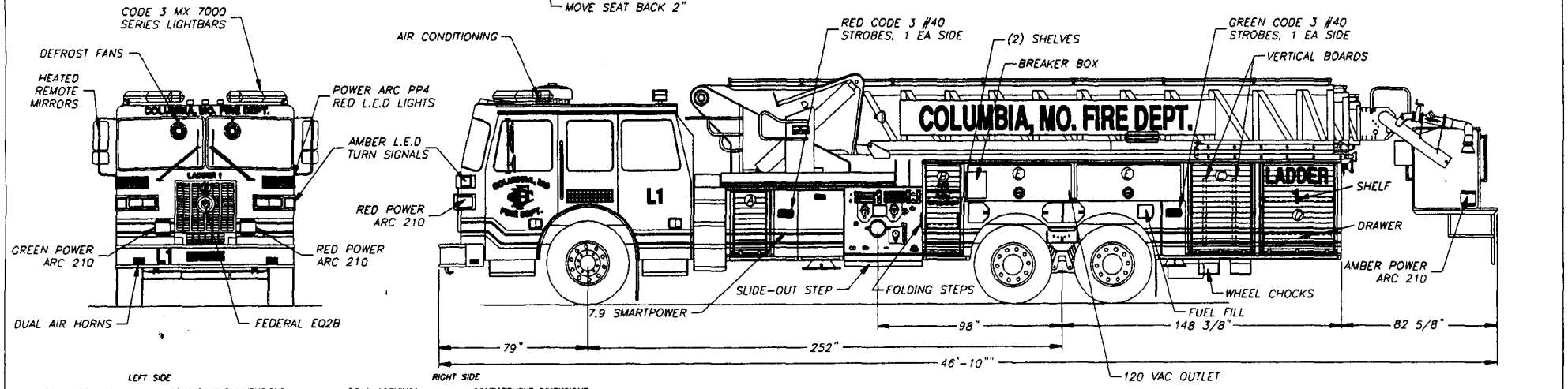

LEFT SIDE

DOOR OPENINGS			COMPARTMENT DIMENSIONS		
COMP'T.	HEIGHT	WIDTH	HEIGHT	WIDTH	DEPTH
A	31	19 3/4	34 3/8	26 5/8	26 1/2
B	45 1/8	16 1/2	48 1/2	22	26 1/2
C	45 1/8	32 1/8	48 1/2	37 3/4	26 1/2
D	45 1/8	39 7/8	48 1/2	45 3/4	26 1/2
E	16 5/8	52 1/4	19 1/8	57 3/4	26 1/2

RIGHT SIDE

DOOR OPENINGS			COMPARTMENT DIMENSIONS		
COMP'T.	HEIGHT	WIDTH	HEIGHT	WIDTH	DEPTH
A	31	36 3/4	34 3/8	42 1/2	26 1/2
B	45 1/2	16 1/2	48 1/2	22	26 1/2
C	24 3/4	32 1/8	28	37 3/4	26 1/2
D	24 3/4	39 7/8	28	45 3/4	26 1/2

REAR COMPARTMENT

DOOR OPENINGS			COMPARTMENT DIMENSIONS		
COMP'T.	HEIGHT	WIDTH	HEIGHT	WIDTH	DEPTH
F	15 3/4	27	14 1/4	25 1/2	88 3/4

Proprietary data is included in the information disclosed herein and is the sole property of THE SUTPHEN CORPORATION. This information is submitted in confidence and neither this document nor the information disclosed herein shall be reproduced or transferred to other documents or disclosed to others for manufacturing or for any other purpose except as specifically authorized in writing by THE SUTPHEN CORPORATION.

The undersigned approves this data for construction in accordance with any changes as indicated on these drawings.

APPROVED BY: _____ DATE: _____
(Authorized Fire Dept. Representative)

SALES REPRESENTATIVE: _____ DATE: _____

REV.	DESCRIPTION	BY	DATE
C	MISC CHANGES PER INSPECTION VISIT	JNH	5/30/01
B	MISC CHANGES PER FDIC	JNH	3/14/01
A	MISC CHANGES PER PRE-CONSTRUCTION	JNH	2/08/01

SUTPHEN CORPORATION
7000 COLUMBUS-MARYSVILLE ROAD
AMLIN, OHIO 43002

DR. J. HAULMAN
DATE 11/21/00
SCALE NONE
TOL.

COLUMBIA, MO.
MODEL 90 LOW RAIL

REL. REQ'D.
DWG. NO. HS-3572