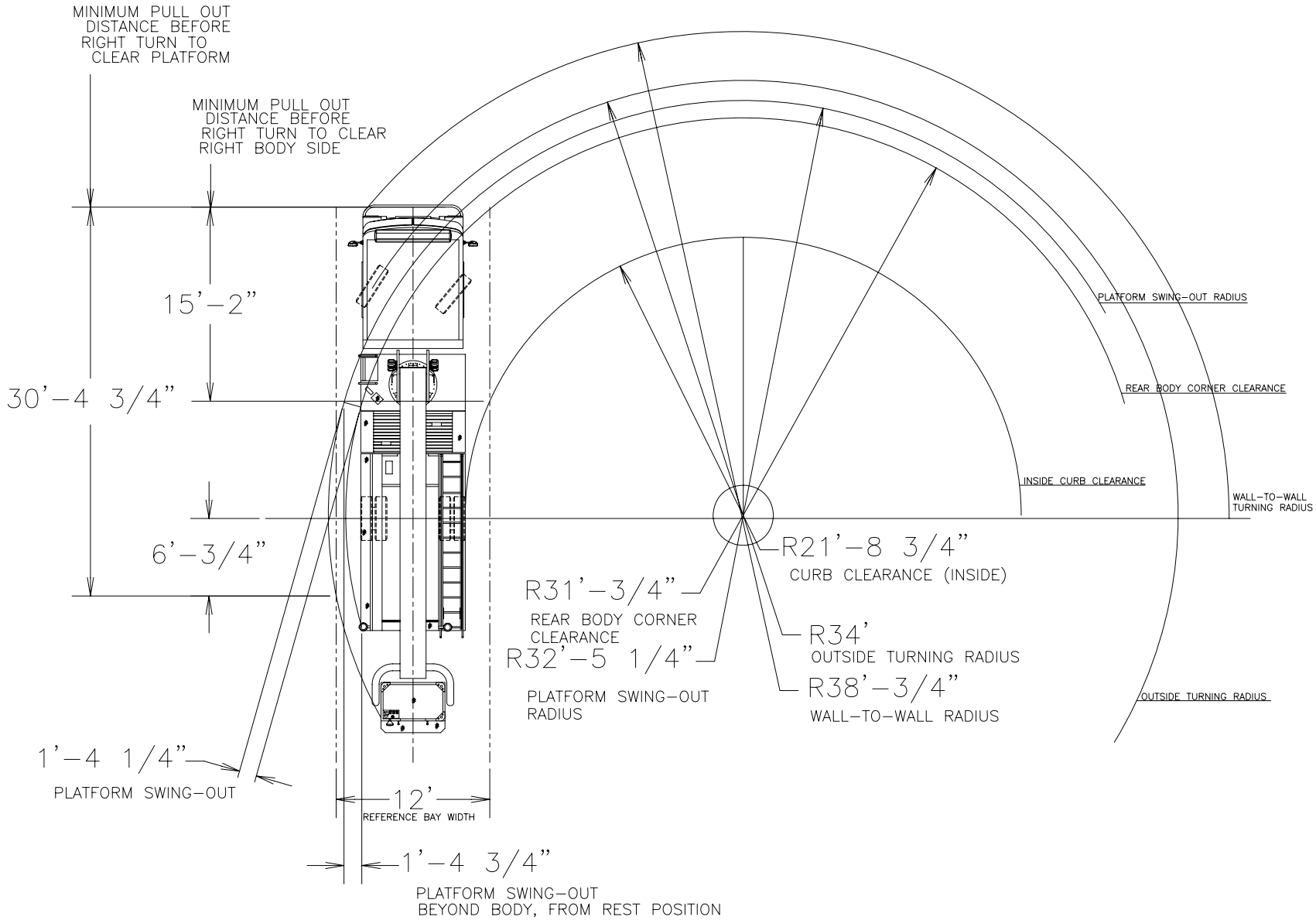

REVISIONS							
REV	BY	DATE	DESCRIPTION	REV	BY	DATE	DESCRIPTION

Proprietary data is included in the information disclosed herein and is the sole property of SUTPHEN TOWERS INCORPORATED. This information is submitted in confidence and neither this document nor the information disclosed herein shall be reproduced or transferred to other documents or disclosed to others for manufacturing or for any other purpose except as specifically authorized in writing by SUTPHEN TOWERS INCORPORATED.

SUTPHEN TOWERS INCORPORATED
4500 SUTPHEN COURT
HILLIARD, OHIO 43026
(614)876-1262
(614)876-3073 (FAX)

70' PLATFORM TURNING CLEARANCE

215" WHEELBASE, RESCUE BODY, STANDARD BUMPER EXTENSION

DRN BY	DATE	SIZE	SCALE	DWG NO.	REV
JGARVER	YYYYMMMDD	C	NTS	11/B/1024	–
CHKD BY	DATE				SHEET 1 OF 1