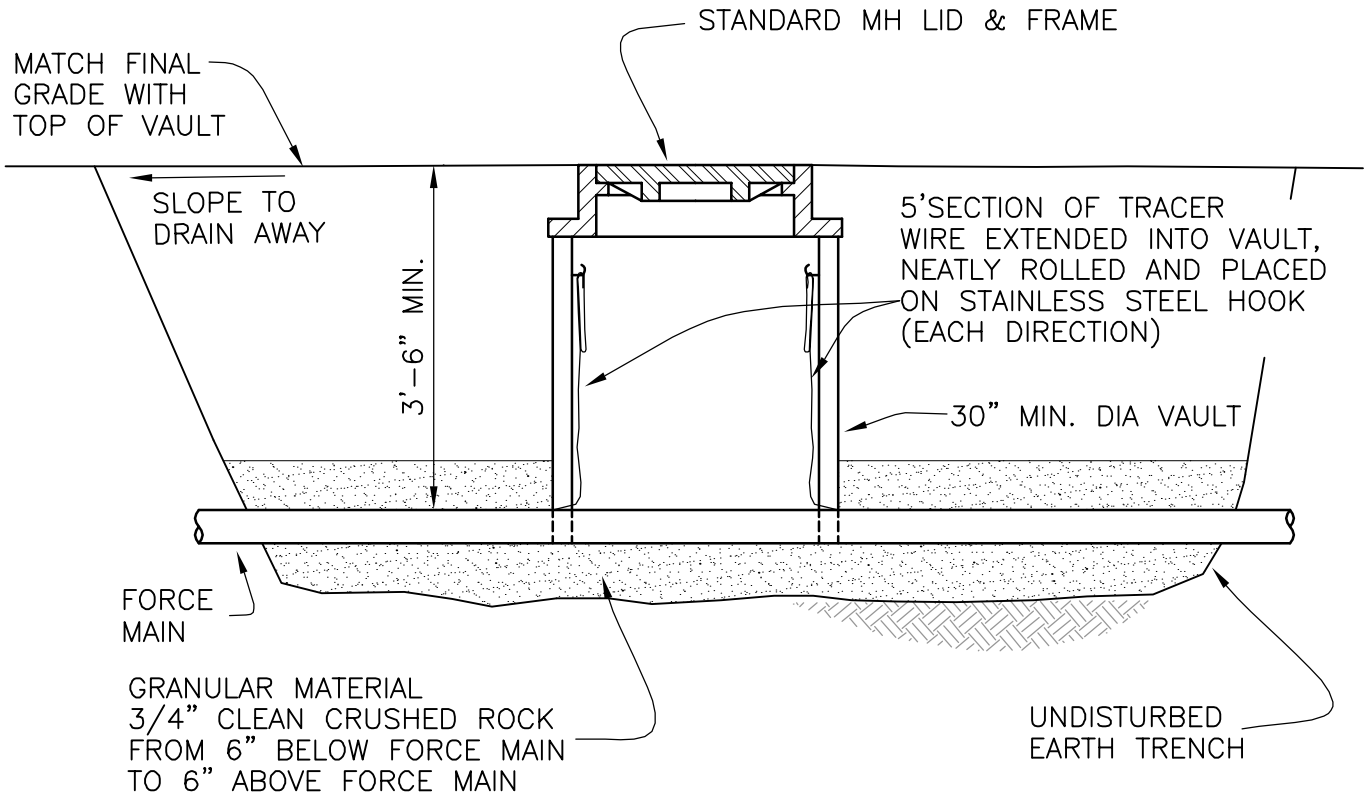

SECTION

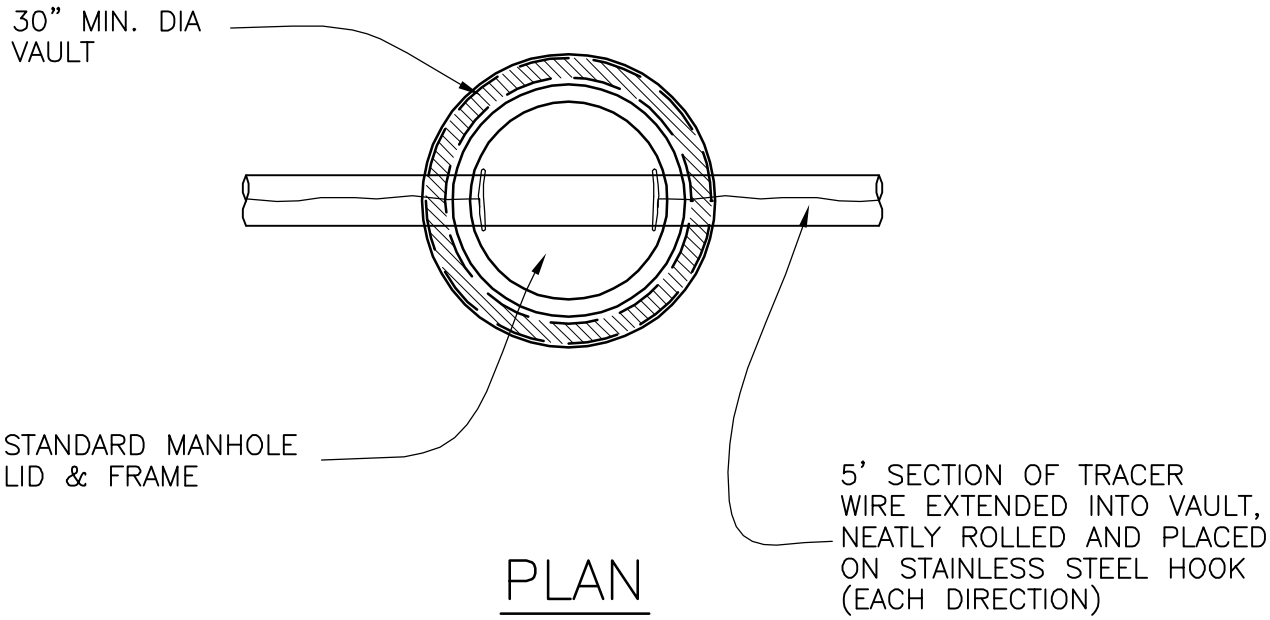

PLAN

DM Approved	5/02/01 Date	City of Columbia Public Works Department	TRACER WIRE ACCESS VAULT	09
Revisions				