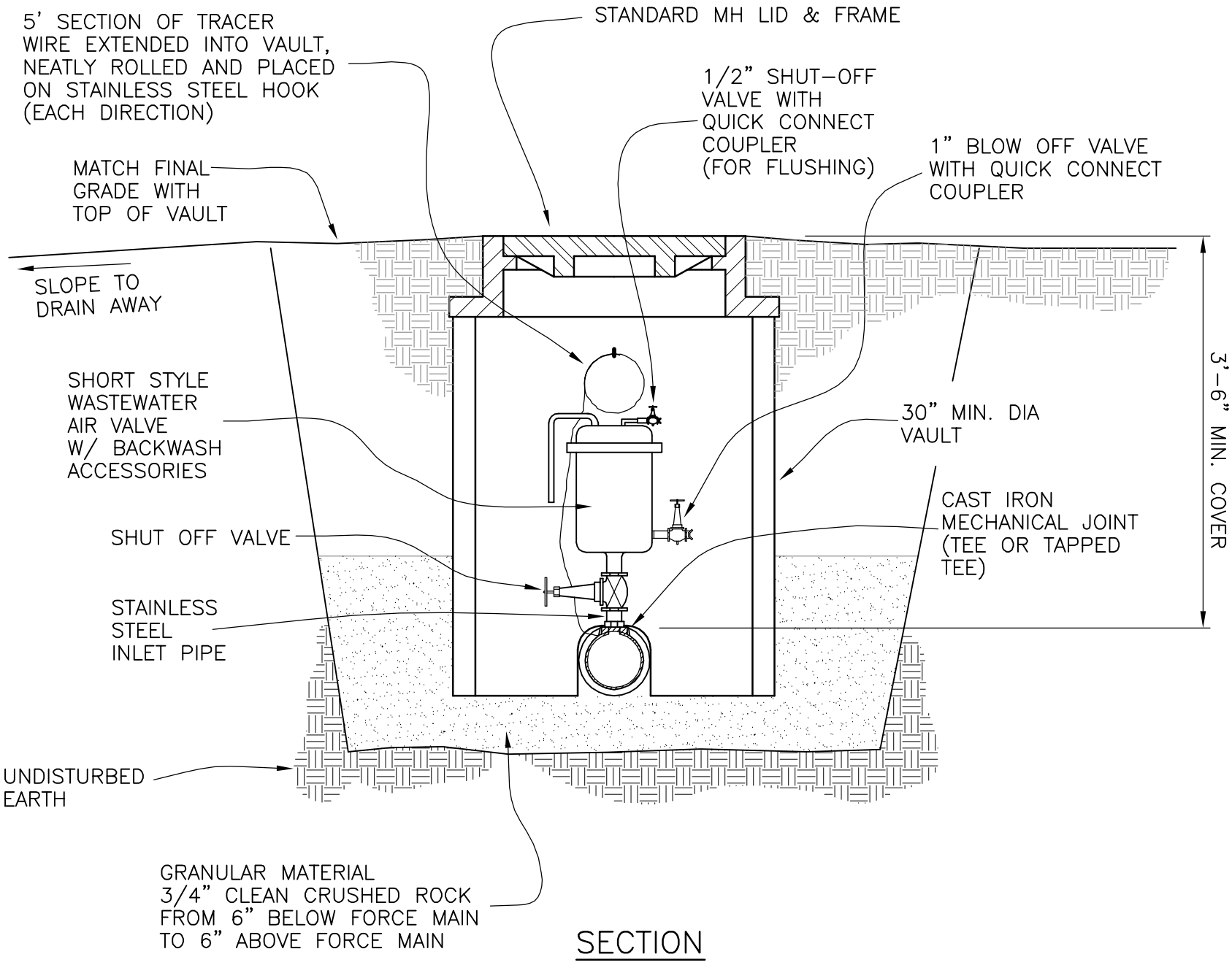

SECTION

Approved 5/02/01 Date

Revisions

City of Columbia Public Works Department

AIR RELEASE VALVE VAULT (SECTION VIEW)

05