NOTE:
1. EXISTING MAIN SEGMENT REPLACEMENT AT DISCRETION OF ENGINEER

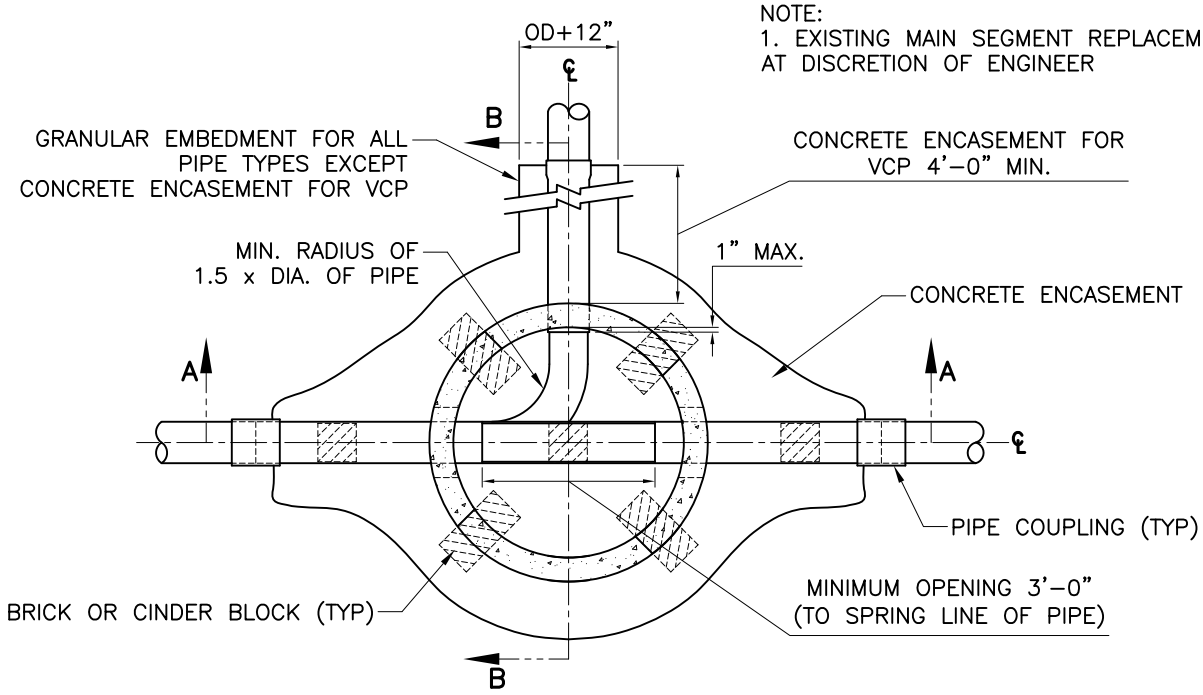

HORIZONTAL SECTION

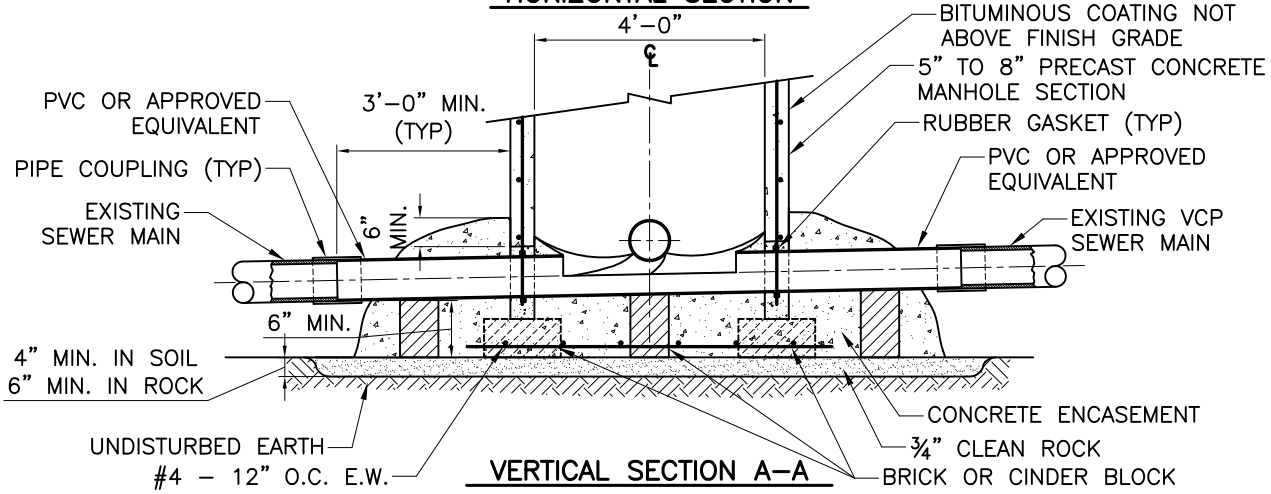

VERTICAL SECTION A–A

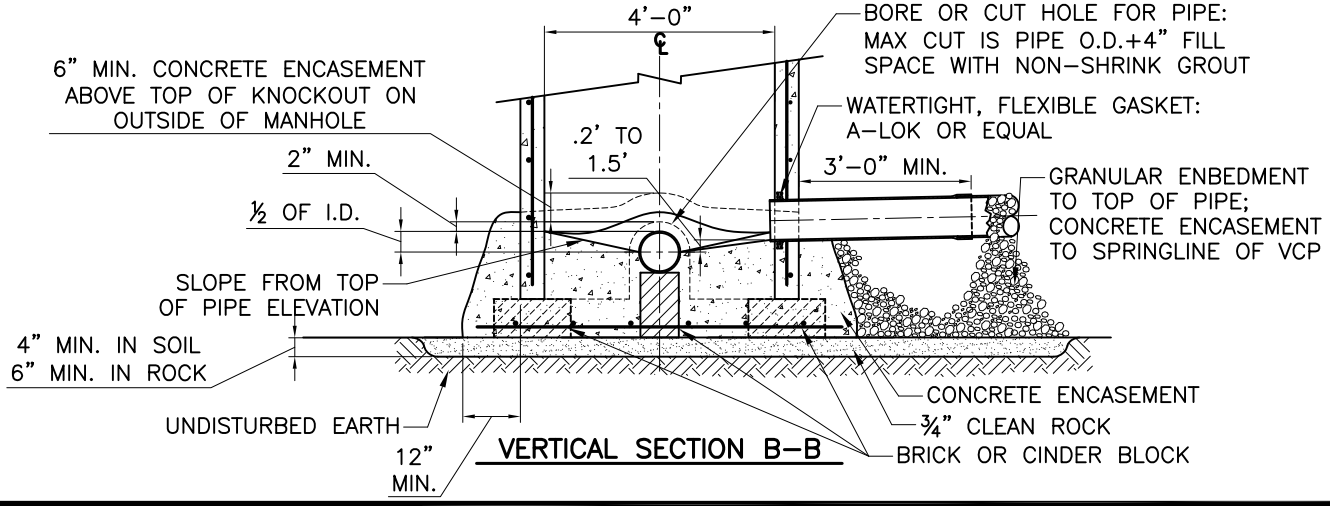

VERTICAL SECTION B–B

JDS Approved	1/1/12 Date	City of Columbia Public Works Department	DOGHOUSE MANHOLE	22
Revisions			