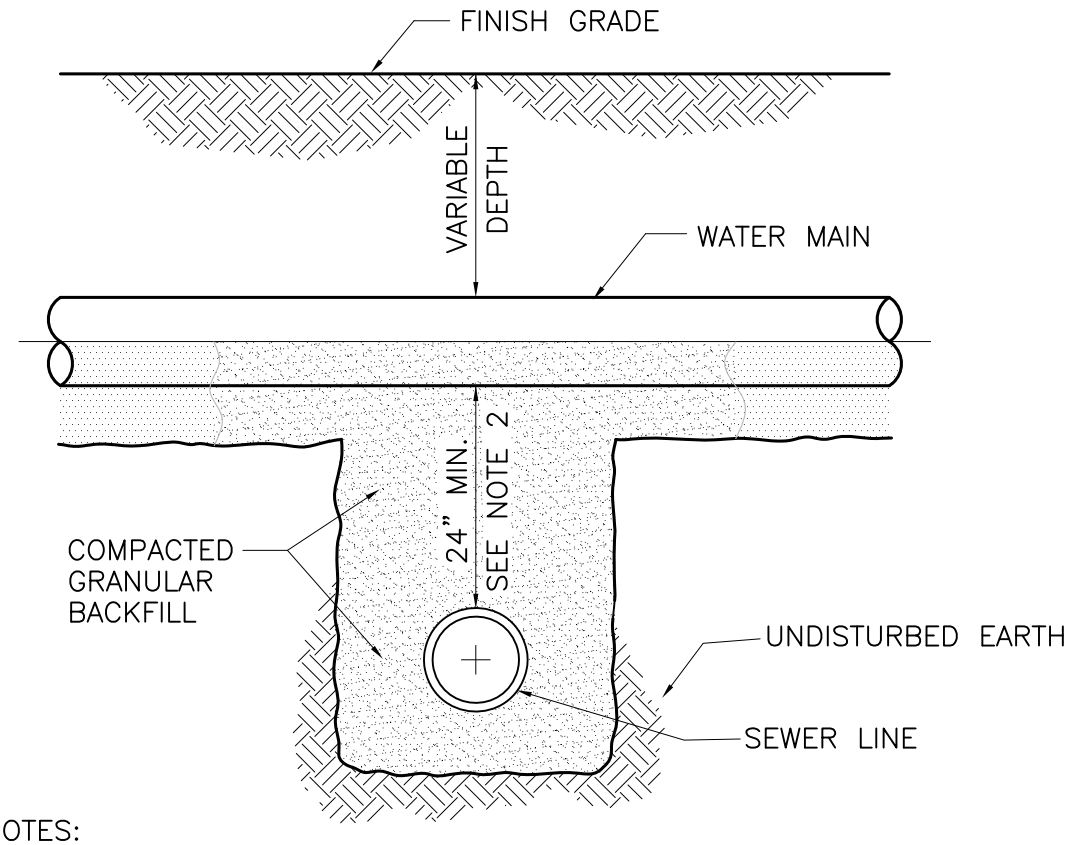

NOTES:

1. SEWERS CROSSING WATER MAINS SHALL BE LAID TO PROVIDE A VERTICAL SEPARATION THAT IS NO LESS THAN 24 INCHES BETWEEN THE OUTSIDE OF THE WATER MAIN AND THE OUTSIDE OF THE SEWER MAIN.

2. THE CROSSING SHALL BE ARRANGED SO THAT THE SEWER LINE CROSSES BELOW THE WATER LINE. CROSSINGS IN WHICH THE SEWER LINE IS ABOVE THE WATER LINE WILL ONLY BE APPROVED ON A CASE BY CASE BASIS.

3. THE CROSSING SHALL BE ARRANGED SO THAT THE ENDS OF A FULL JOINT OF PIPE WILL BE EQUIDISTANT FROM THE WATER MAIN AND AS FAR AS POSSIBLE FROM THE WATER MAIN JOINTS.

4. IF THE VERTICAL SEPARATION BETWEEN THE WATER MAIN AND SEWER MAIN IS LESS THAN 18 INCHES, THE SEWER MAIN SHALL BE D.I.P. OR PRESSURE RATED PVC PIPE WITH A PRESSURE RATING THAT IS EQUAL TO OR GREATER THAN THE WATER MAIN. THE D.I.P. OR PRESSURE RATED P.V.C. MUST BE EXTENDED A DISTANCE 10 FEET ON BOTH SIDES OF THE WATER MAIN. THE TRANSITION BETWEEN PIPE MATERIALS SHALL BE ACCOMPLISHED WITH A RESTRAINED MECHANICAL TYPE JOINT OR FITTING. FLEXIBLE TYPE (FERNCO) FITTINGS ARE NOT ACCEPTABLE.

5. PRESSURE SEWER LINE AND WATER LINE CROSSINGS SHALL BE REVIEWED ON A CASE BY CASE BASIS.

JDS Approved	1/1/12 Date	City of Columbia Public Works Department	GRAVITY SEWER AND WATER LINE CROSSING	20
Revisions				