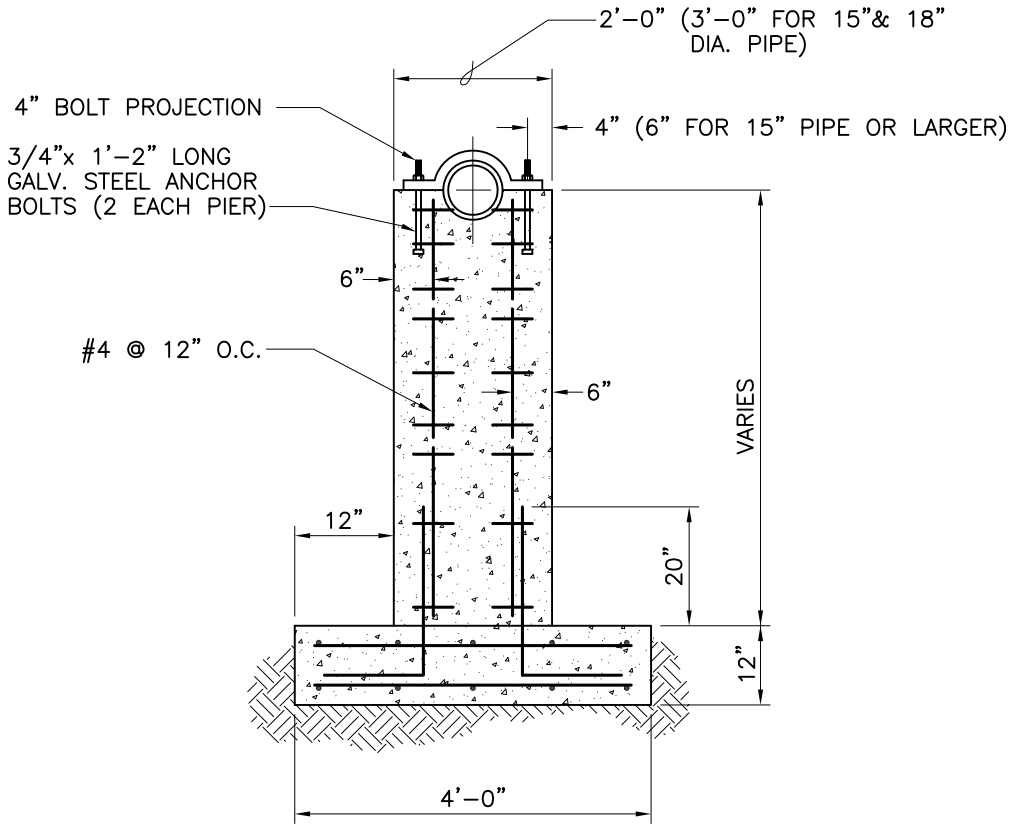

FRONT ELEVATION

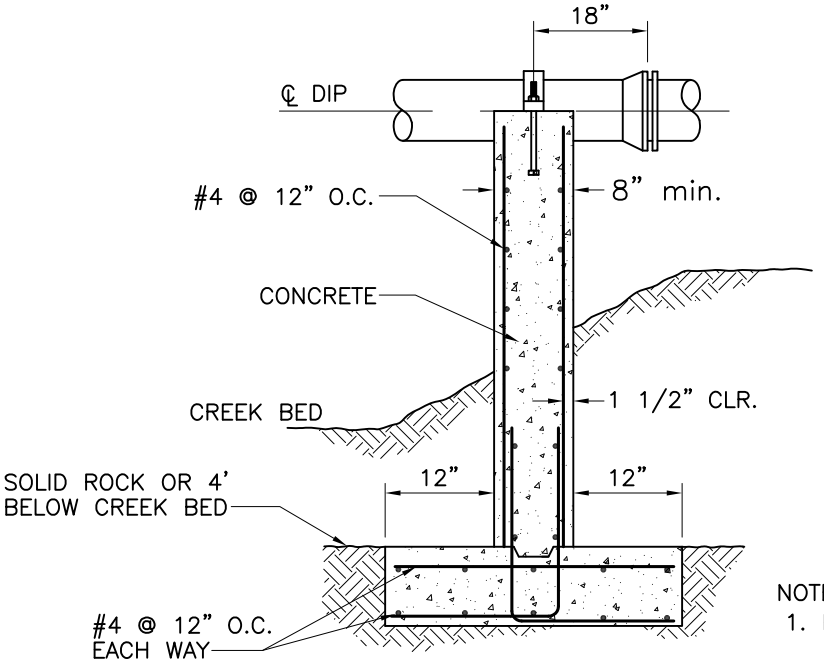

SIDE ELEVATION

NOTE:

1. PIERS SHALL BE LOCATED AS NEAR TO THE BANK AS POSSIBLE.
2. TOP OF FOOTING AT SOLID ROCK OR 4 FT. BELOW CREEK BED.

JDS Approved	1/1/12 Date	City of Columbia Public Works Department	PIER DETAIL	18
Revisions				