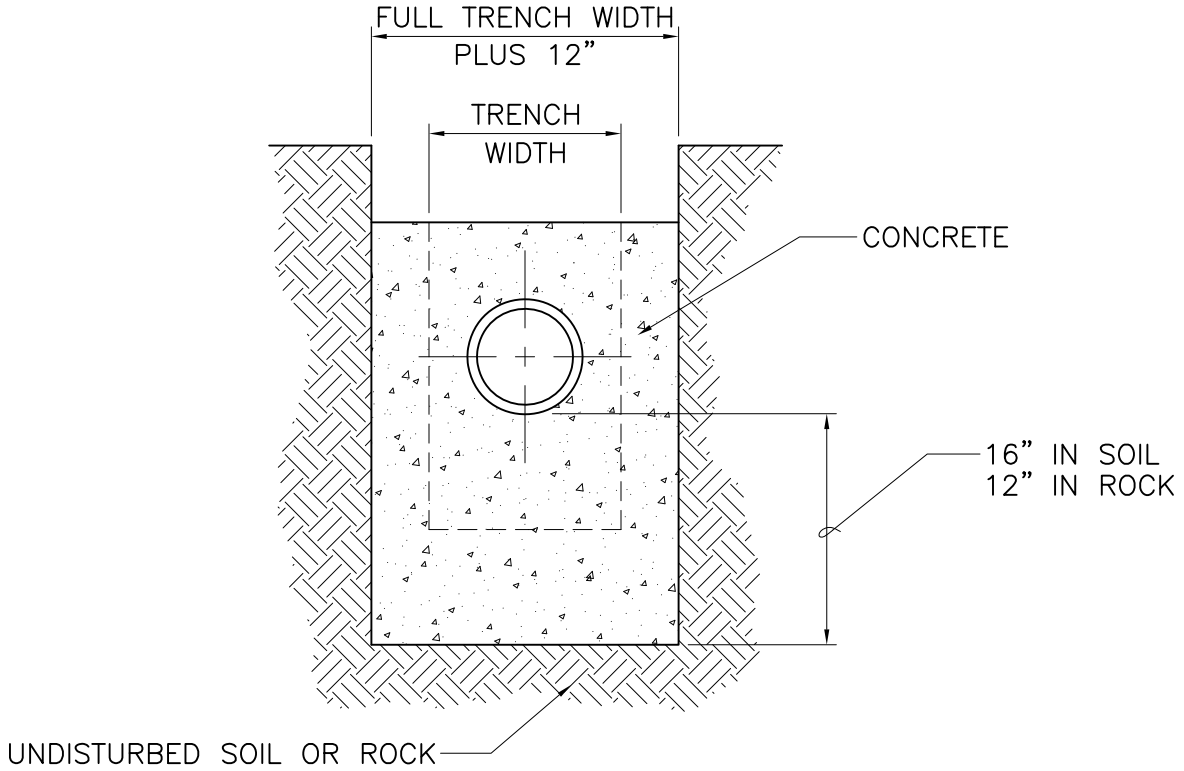

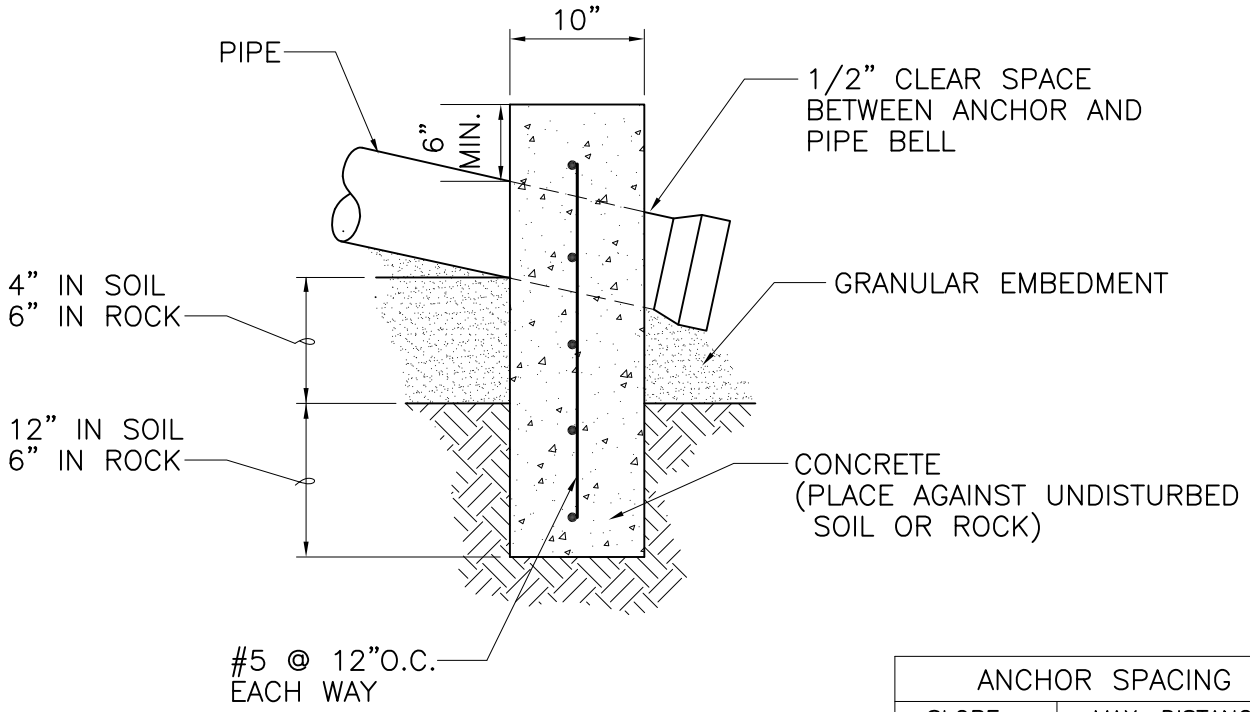

SIDE ELEVATION

ANCHOR SPACING	
SLOPE	MAX. DISTANCE
20%–35%	36'
35%–50%	24'
>50%	12' OR ONE PER JOINT OF PIPE

JDG Approved	1/1/12 Date	City of Columbia Public Works Department	ANCHOR DETAIL	17
Revisions				