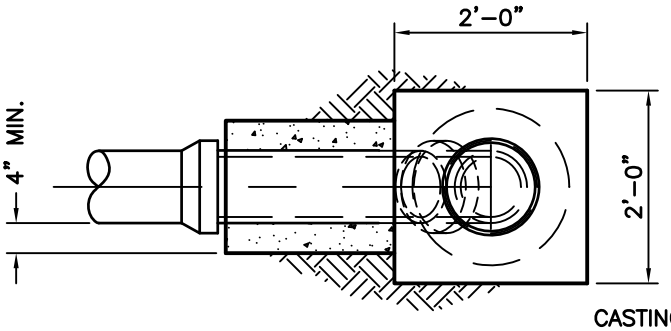

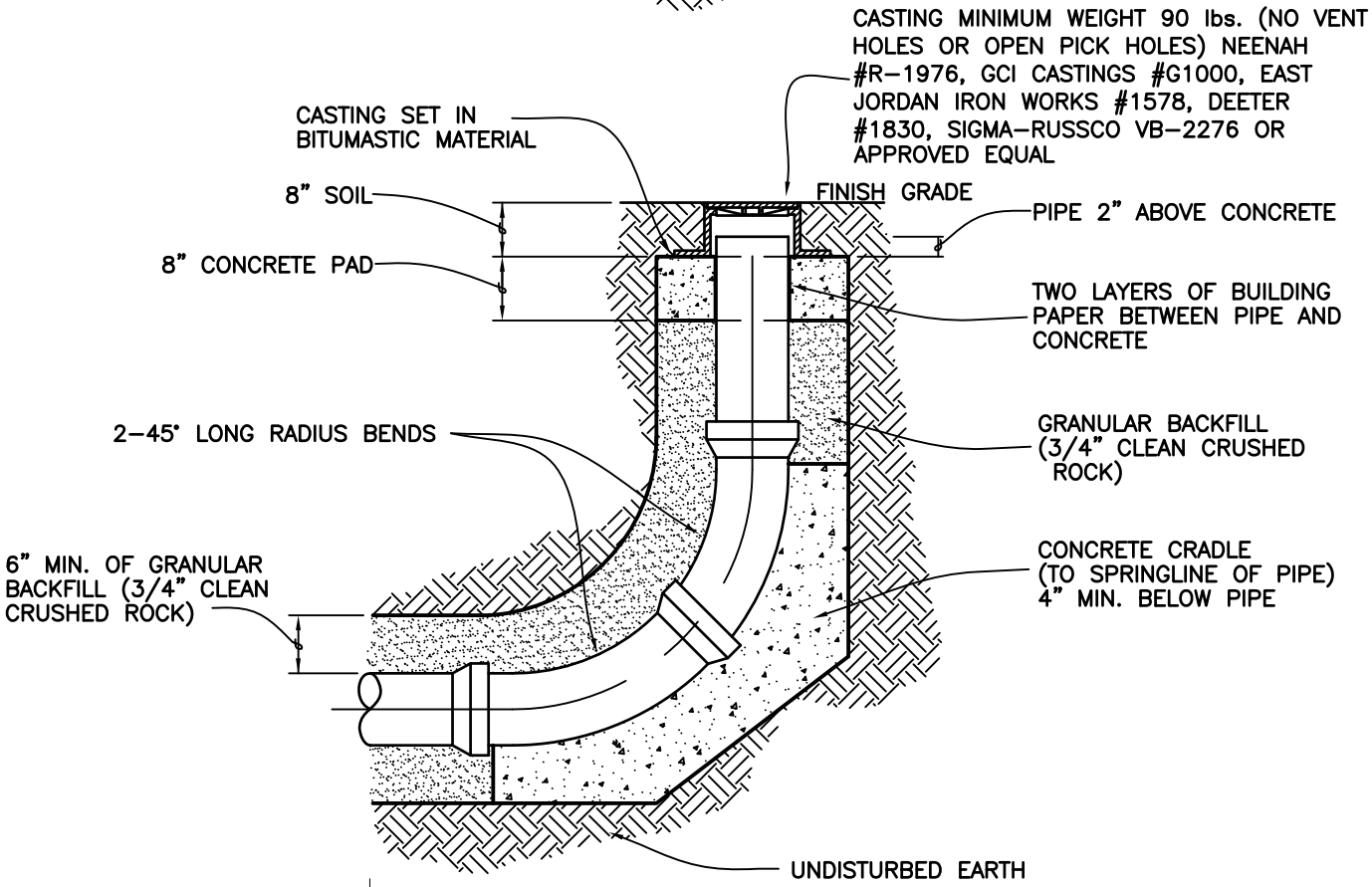

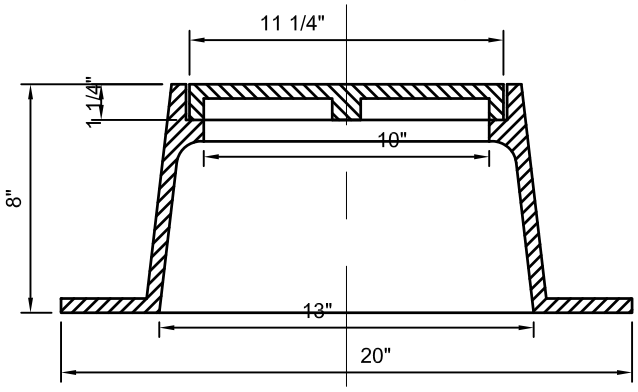

FRAME & LID

NOTE:
DISTANCE FROM CENTER OF DOWNSTREAM MANHOLE TO CENTER OF CLEANOUT SHALL BE 150 FEET OR LESS.

JDG Approved	1/1/12 Date	City of Columbia Public Works Department	STANDARD CLEANOUT	12
Revisions				