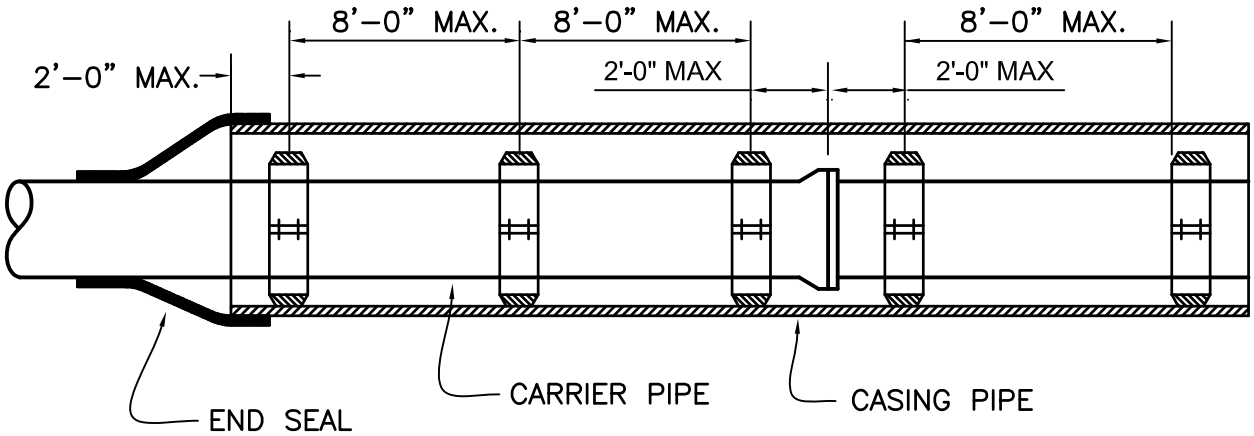

TYPE I SPACERS

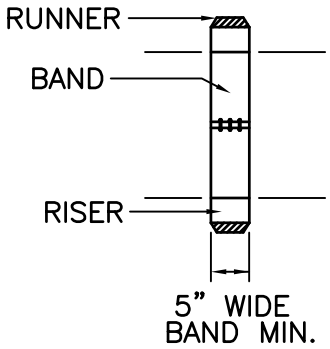

TYPE II SPACERS

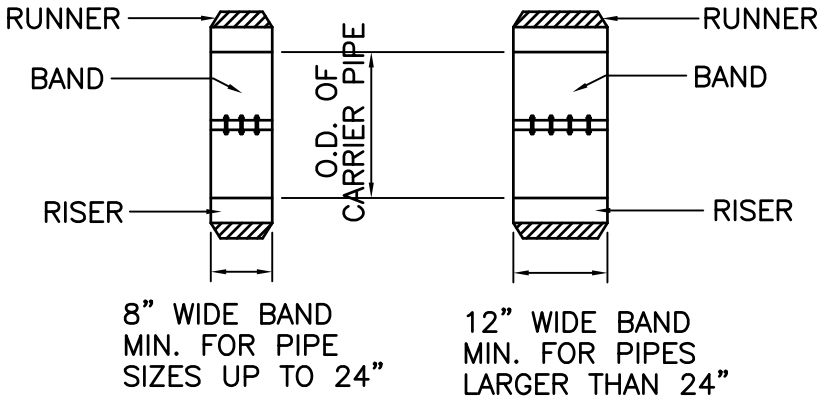

SIZES 14" THRU 36"

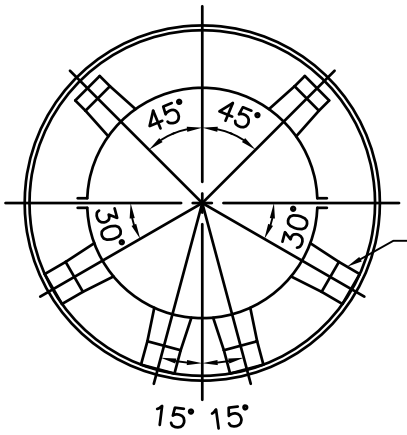

SIZES 4" THRU 12"

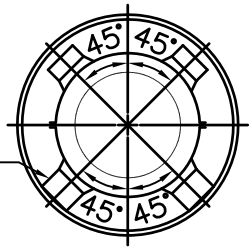

RISER

Approved 1/1/12 Date	City of Columbia Public Works Department	PIPE ENCASEMENT (Steel)	11
Revisions			