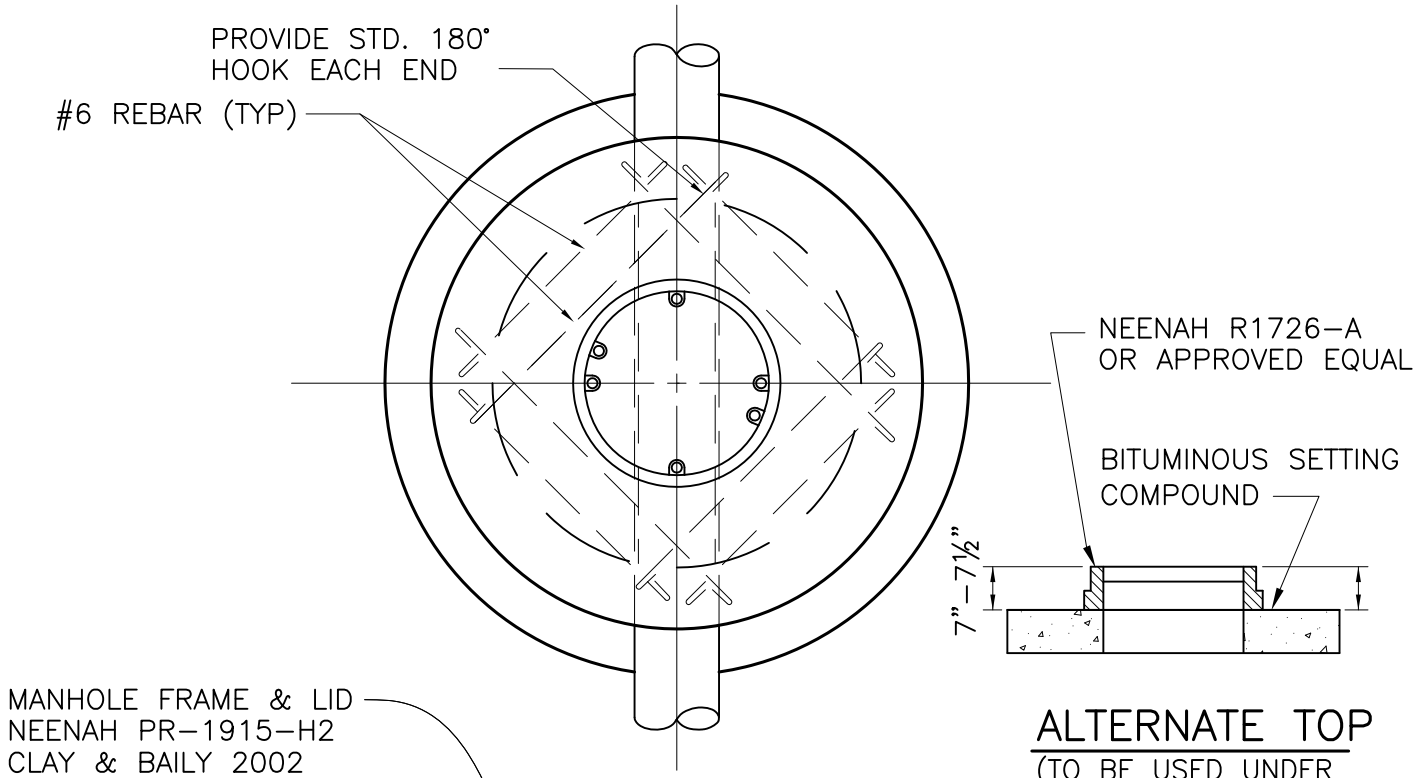

ALTERNATE TOP
(TO BE USED UNDER PAVEMENTS ONLY)

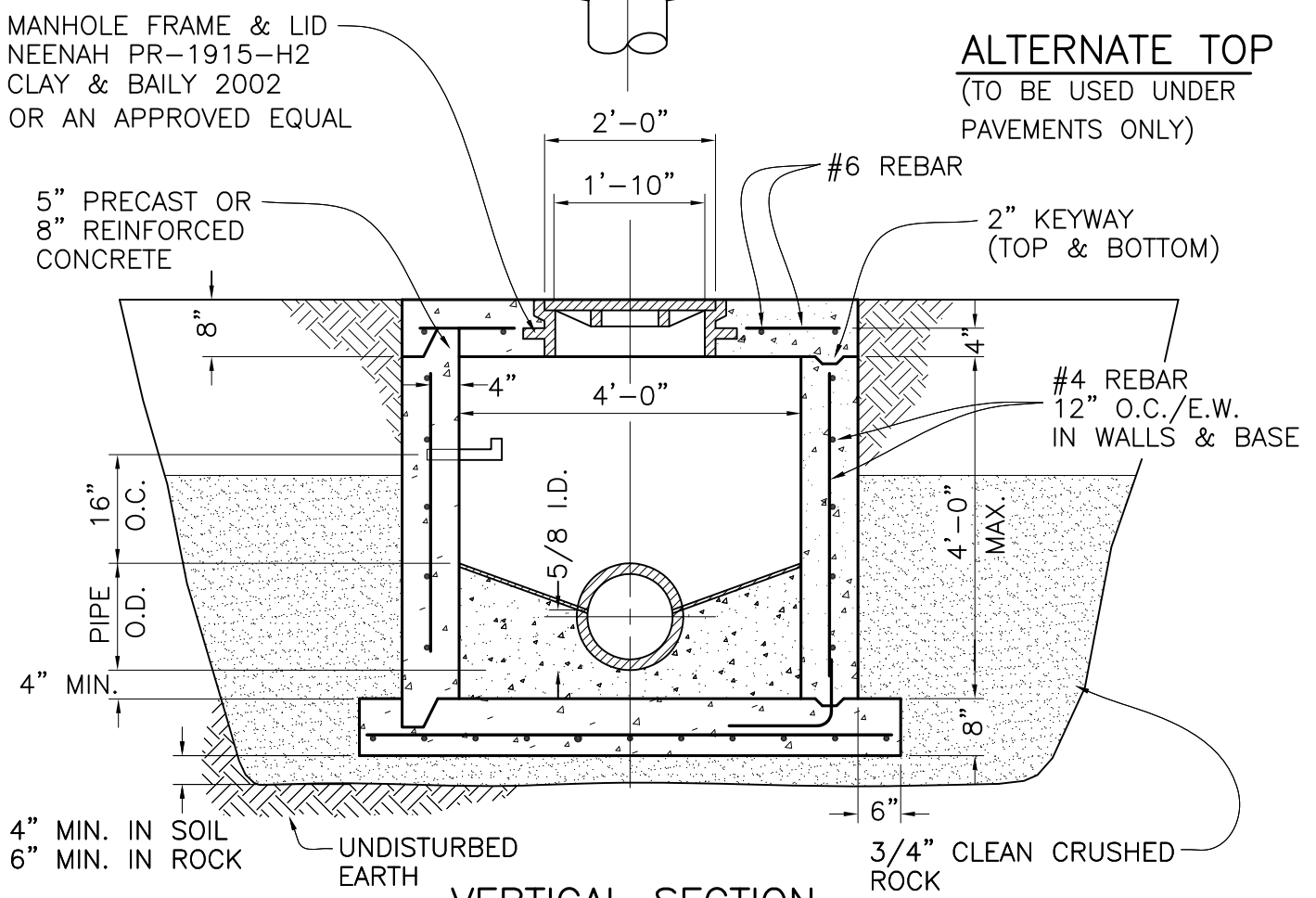

VERTICAL SECTION

JDS Approved	1/1/12 Date	City of Columbia Public Works Department	FLAT TOP SHALLOW MANHOLE	2
Revisions				