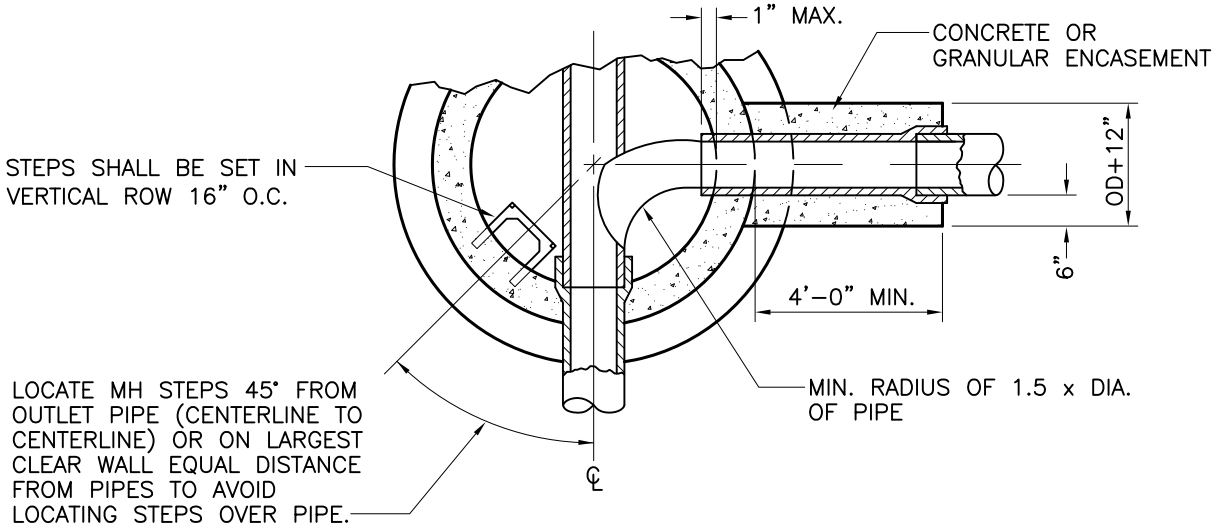

HORIZONTAL SECTION

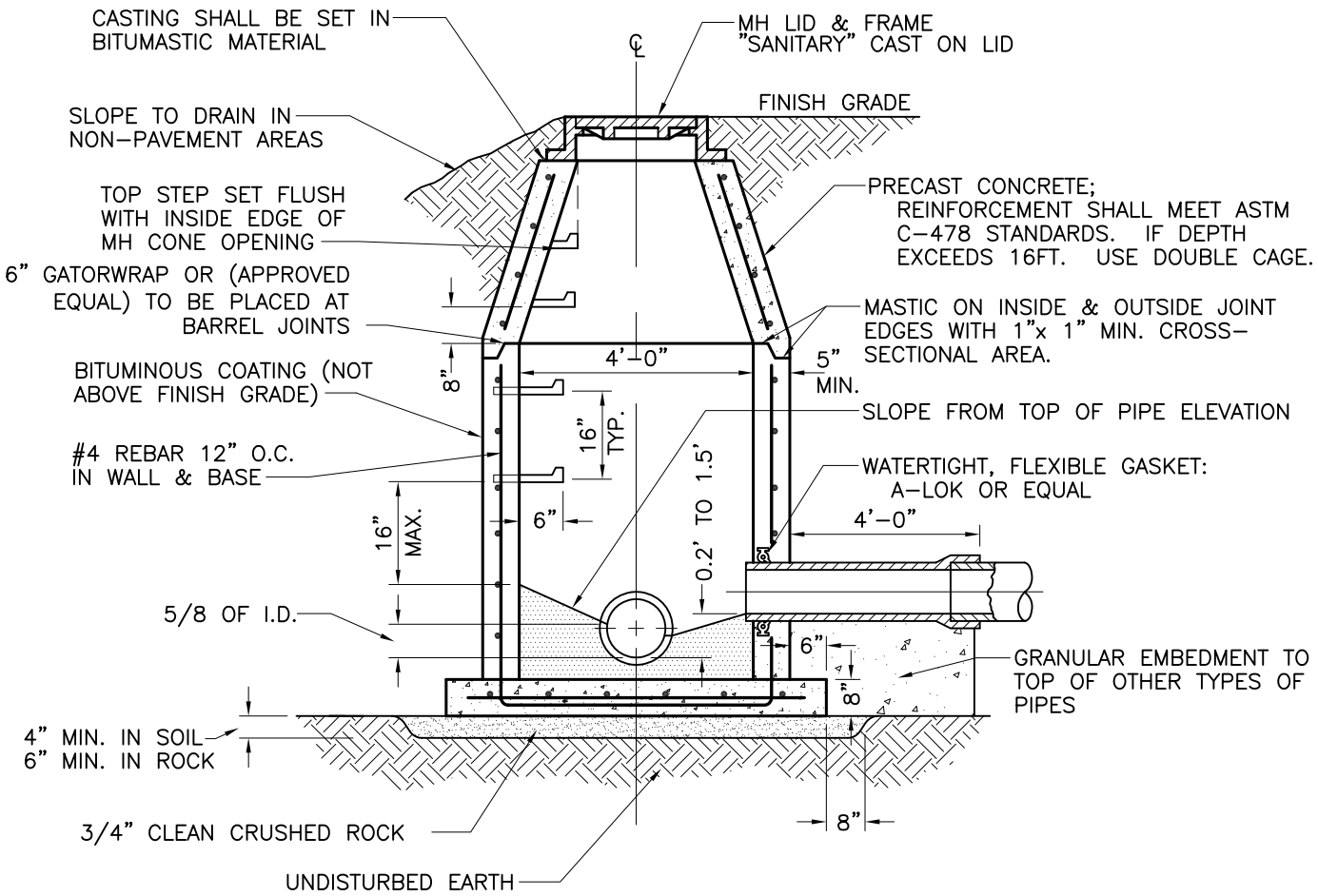

VERTICAL SECTION

JDG 6/1/12 Approved Date Revisions	City of Columbia Public Works Department	STANDARD MANHOLE	1