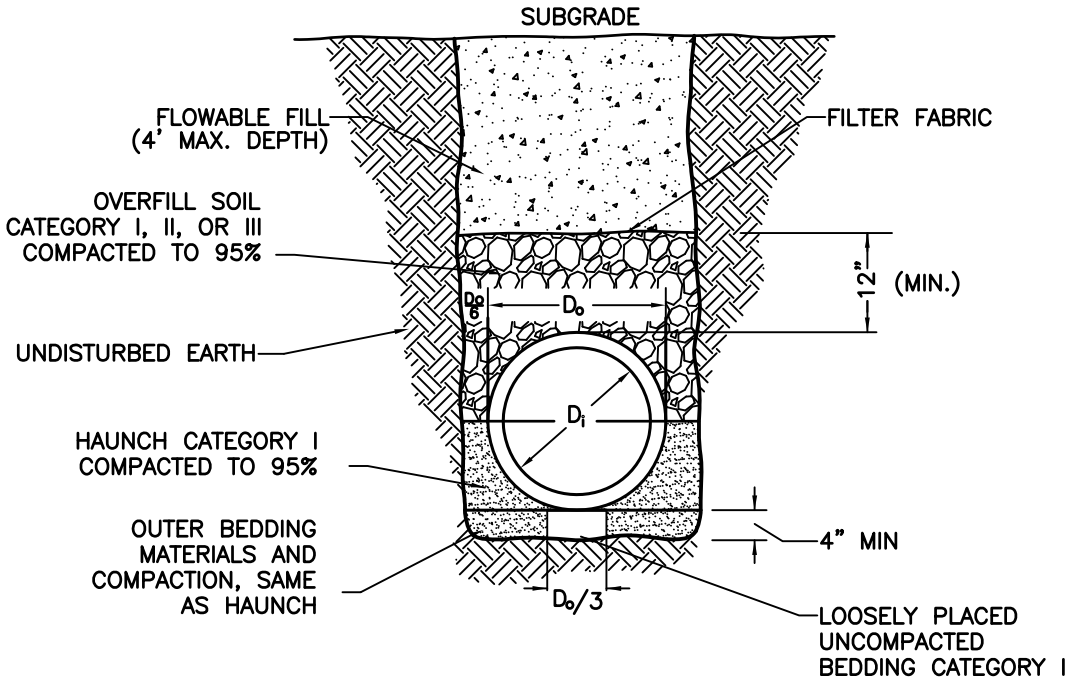

RIGID PIPE

PIPE DIAMETER	PAYLINE/ MIN. TRENCH WIDTH	MAX. TRENCH WIDTH
12"–36"	D_o+12"	D_o+24"
42"–72"	D_o+(D_o/3)	D_o+30"
72"+	D_o+(D_o/3)	D_o+48"

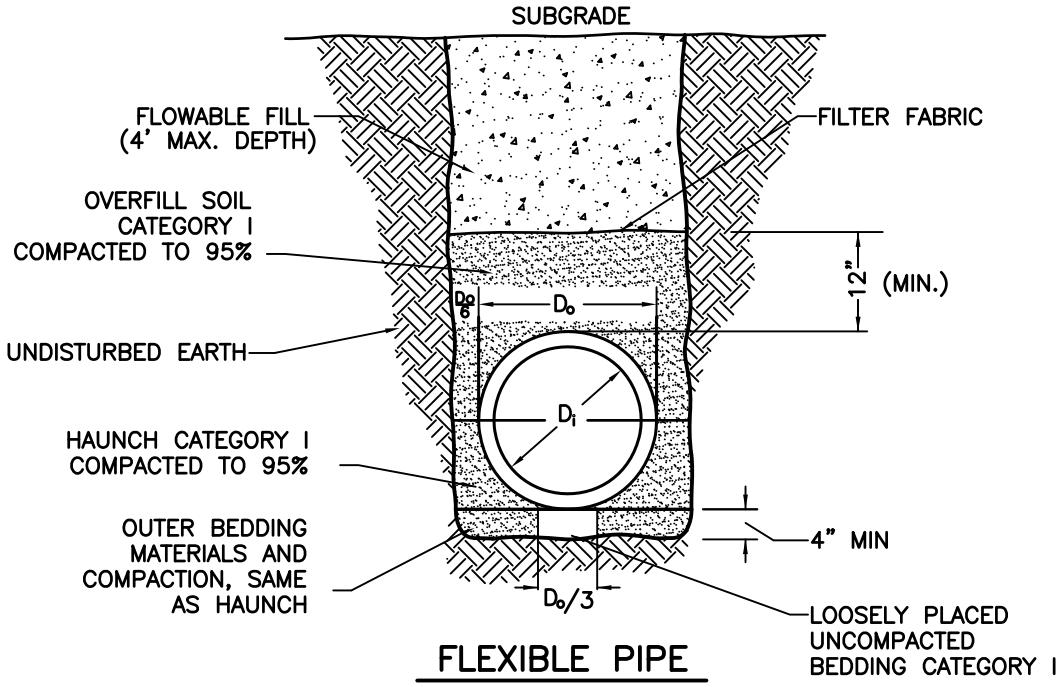

FLEXIBLE PIPE

JDG Approved	6/1/12 Date	City of Columbia Public Works Department	PIPE EMBEDMENT (In the Right of Way)	540.01
Revisions				