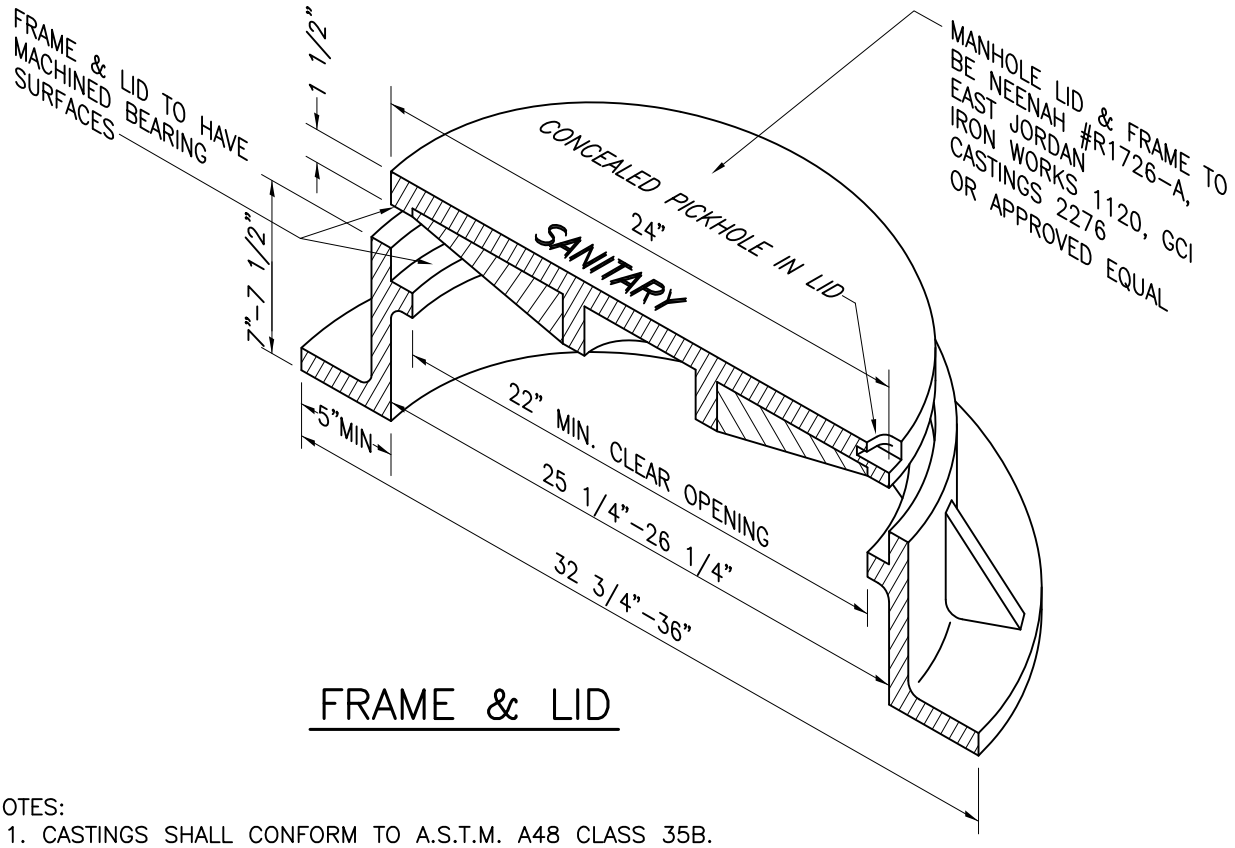

FRAME & LID

NOTES:

1. CASTINGS SHALL CONFORM TO A.S.T.M. A48 CLASS 35B.
2. LIDWEIGHT 135 lbs. MINIMUM. TOTAL MINIMUM WEIGHT OF 350 lbs.
3. WATERTIGHT LID AND FRAME TO BE NEENAH #R-1916-F, OR APPROVED EQUAL
4. MANHOLE STEP AMERICAN STEP ML-10-NCR OR APPROVED EQUAL
5. BOLT DOWN LIDS SHALL HAVE FRAMES BOLTED TO THE CONE SECTION

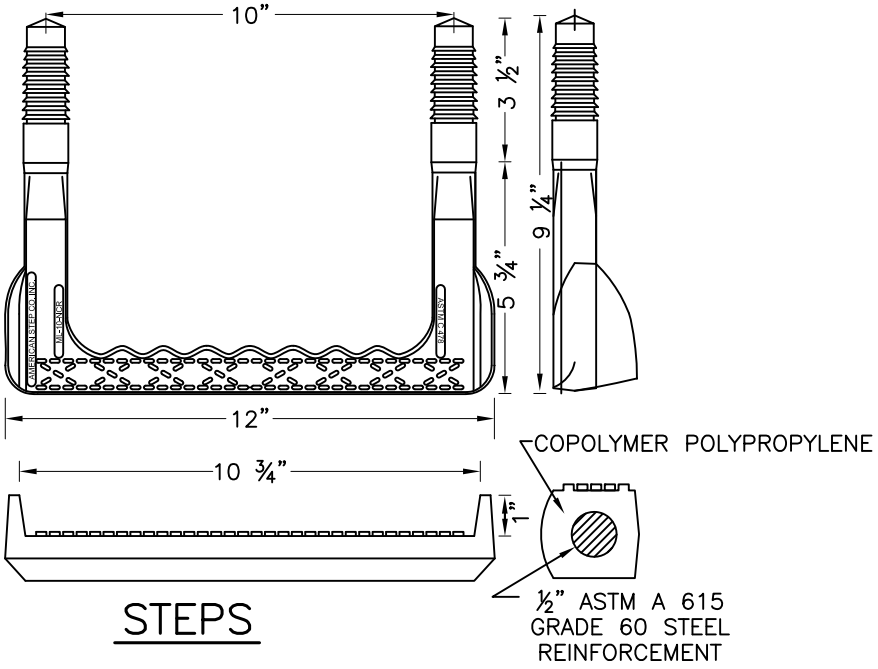

STEPS

Approved 6/1/12 Date	City of Columbia Public Works Department	MANHOLE CASTINGS (Frame, Lid & Steps)	8
Revisions			