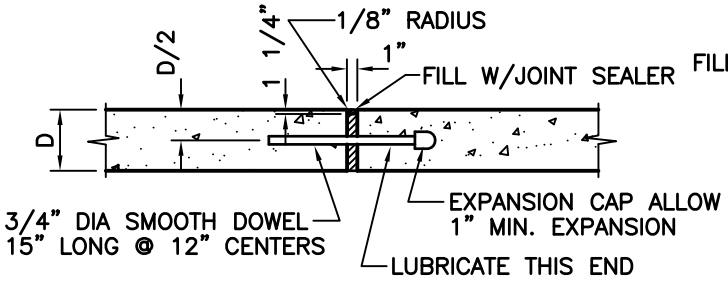

TYPE A
EXPANSION JOINT

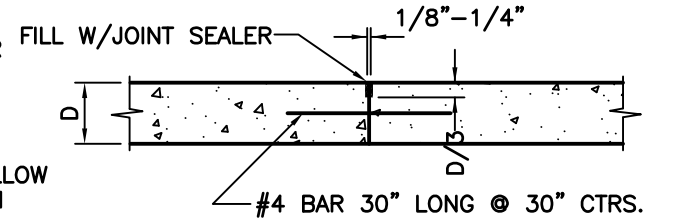

TYPE Ⓒ – CONSTRUCTED WITHOUT TIE BAR
TYPE ⓒⓢ – REQUIRES TIE BAR

TYPE C & CS
SAWED

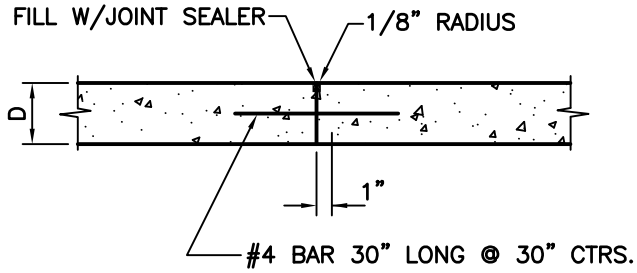

TYPE BS
KEYED CONSTRUCTION JOINT
(With Steel)

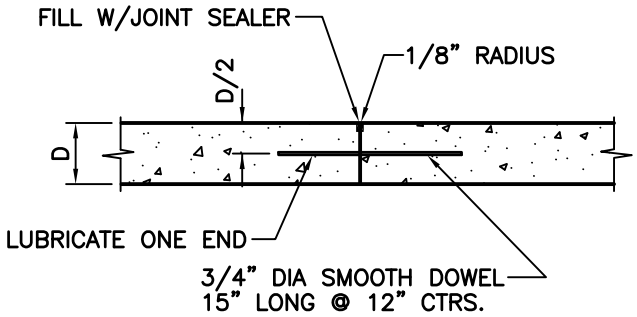

TYPE D
TRANSVERSE CONSTRUCTION JOINT

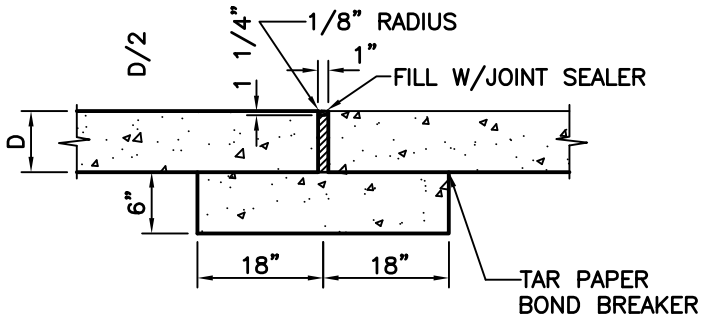

TYPE A ALTERNATE
CONCRETE SILL

Approved 6/1/12 Date	City of Columbia Public Works Department	JOINT DETAILS (P.C. Concrete Pavement)	200.01B
Revisions			