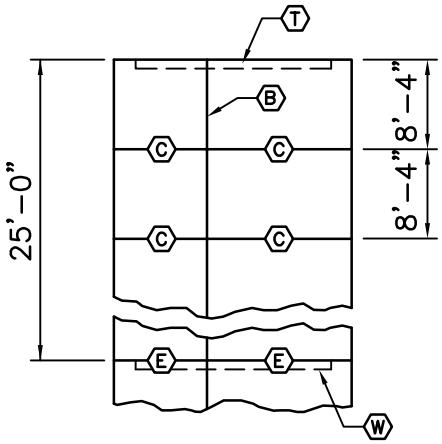

PLAN VIEW

LEGEND

- (C) SAW JOINT, FILL WITH BITUMASTIC JOINT SEALANT – SEE DETAIL.
- (E) 1/2" EXPANSION JOINT AT 50' INTERVALS.
- (T) TOE WALL TO BE CONSTRUCTED AT INLET & OUTLET END OF PAVED DITCHES.
- (B) KEY JOINT (SEE DETAIL)
- (W) CUT–OFF WALL @ 25'–0" SPA.

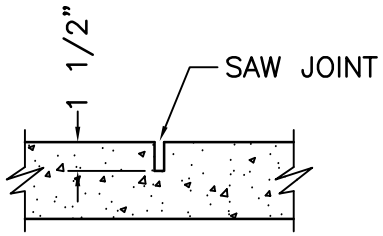

C JOINT DETAIL

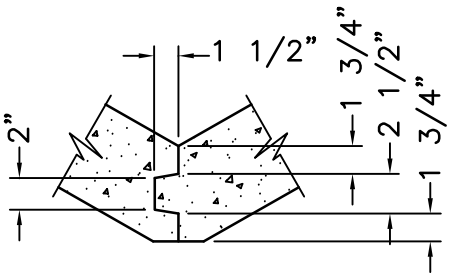

B JOINT DETAIL

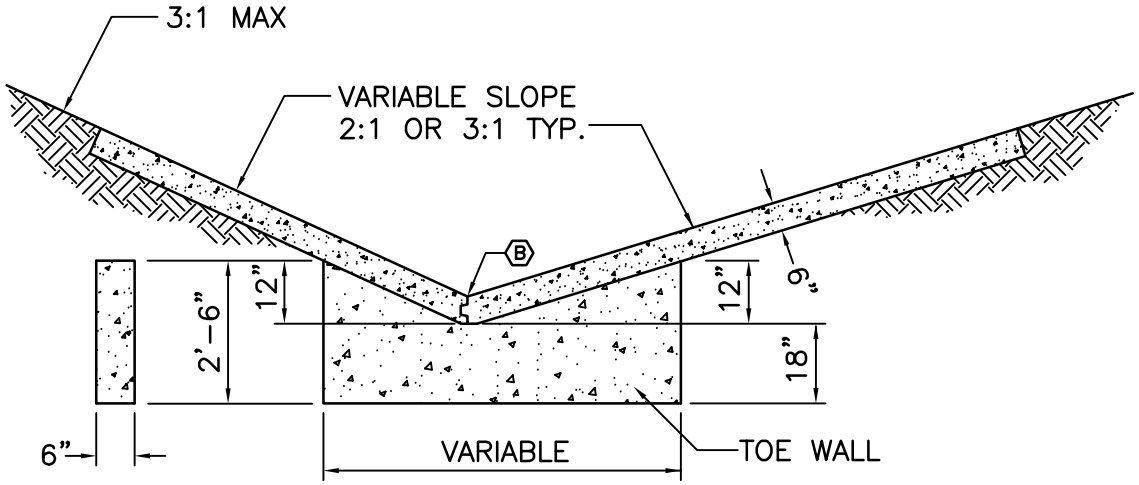

END SECTION

SECTION THROUGH SWALE

SHOWING TOE WALL OR CUT–OFF WALL

NOTE:
CONCRETE SHALL BE CLASS E

Approved 1/1/12 Date

Revisions

City of Columbia
Public Works Department

CONCRETE SWALE
(V-Type)

530.01