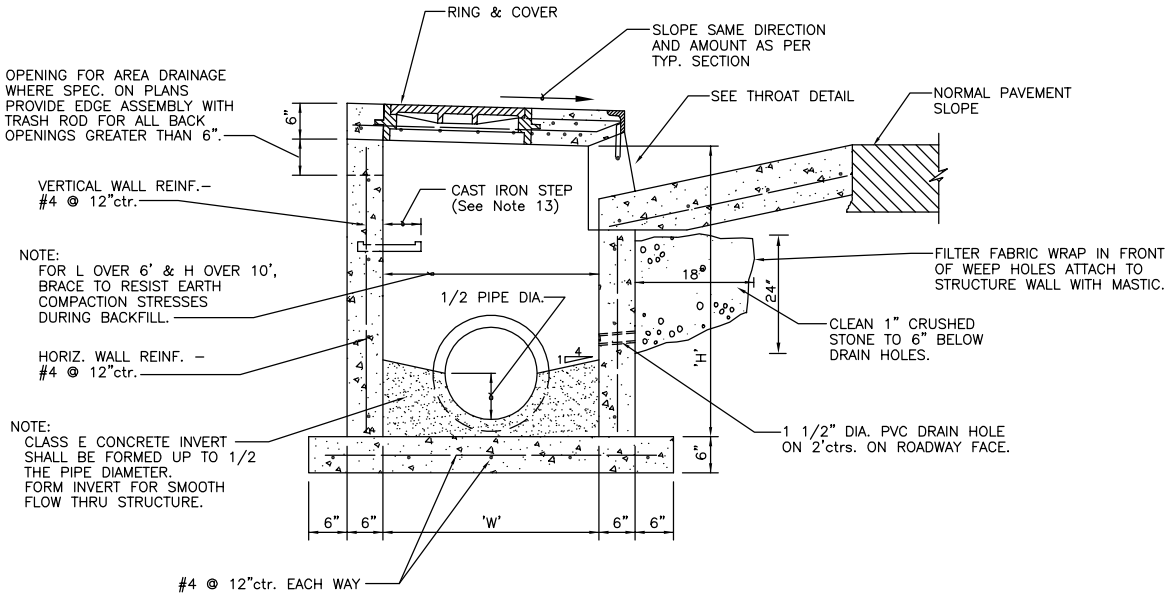


SECTION D–D

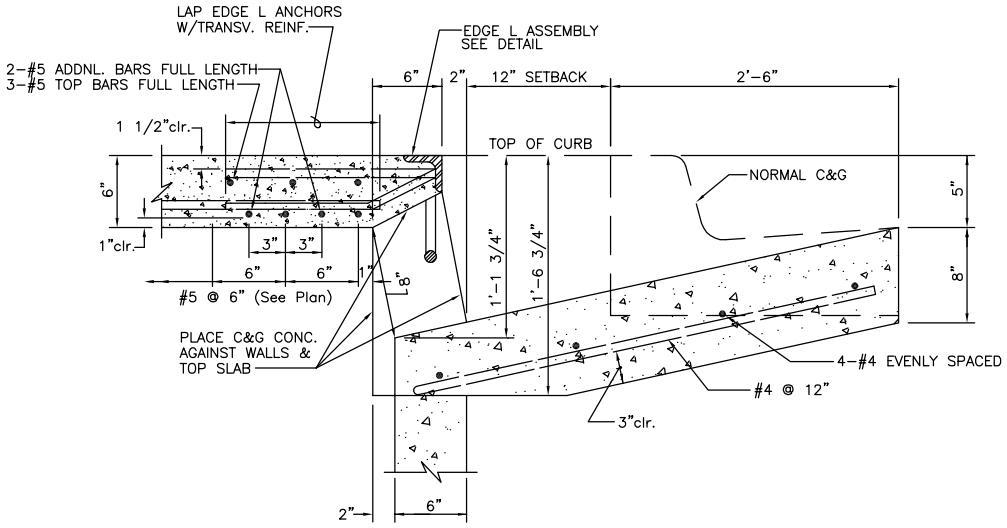


THROAT DETAIL

| | | | |
|---|---|---|---|
| JDG<br>Approved | 1/1/12<br>Date | City of Columbia<br>Public Works Department | TYPE M INLET<br>SECTION AND DETAIL | 505.01C |
| Revisions | | | | |