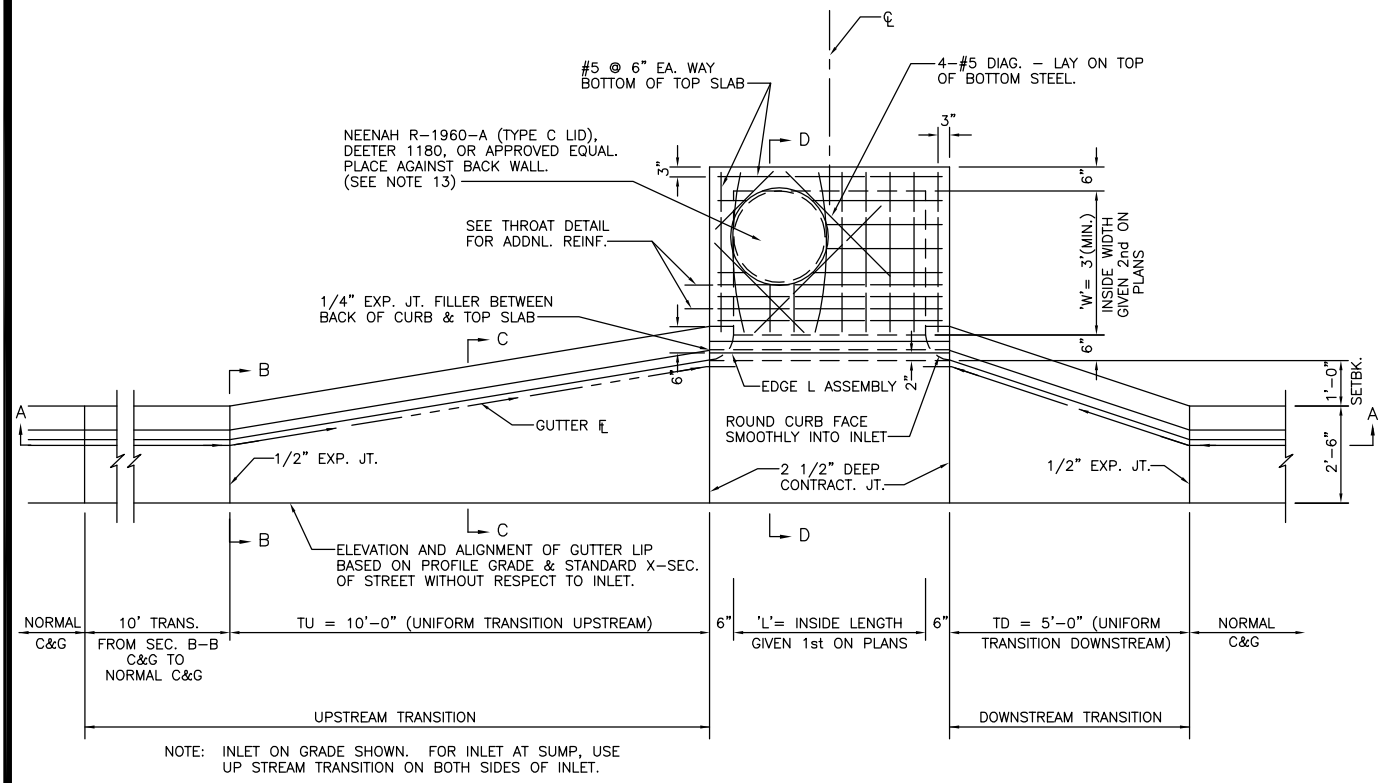

NOTE: INLET ON GRADE SHOWN. FOR INLET AT SUMP, USE UP STREAM TRANSITION ON BOTH SIDES OF INLET.

PLAN

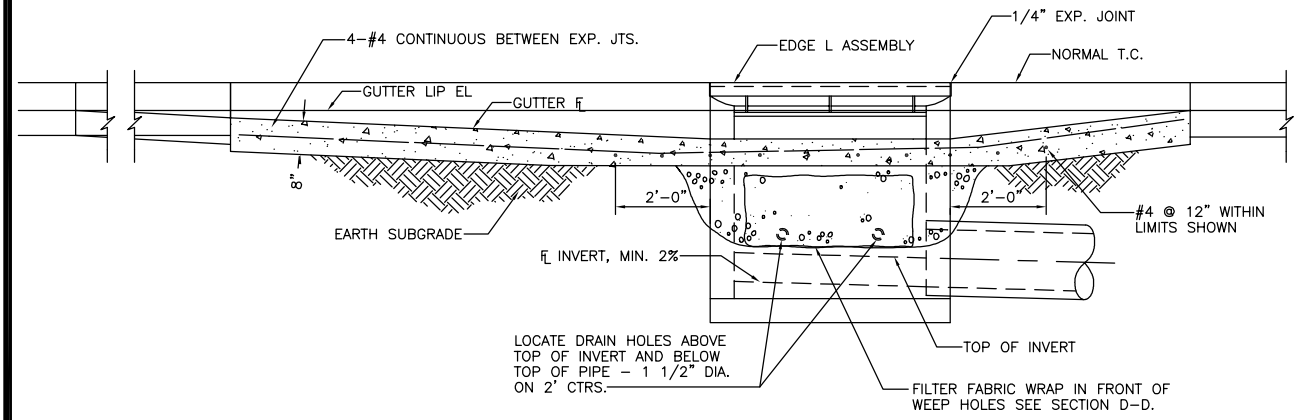

SECTION A-A

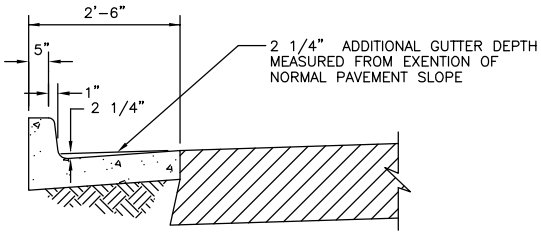

SECTION B-B

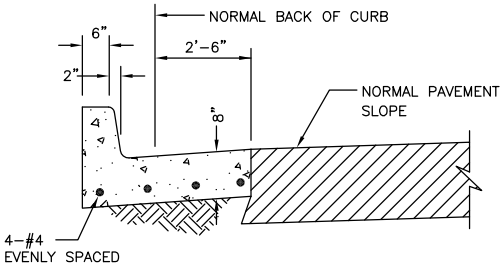

SECTION C-C

JDG Approved	1/1/12 Date	City of Columbia Public Works Department	TYPE M INLET (Plan & Sections)	505.01A
Revisions				