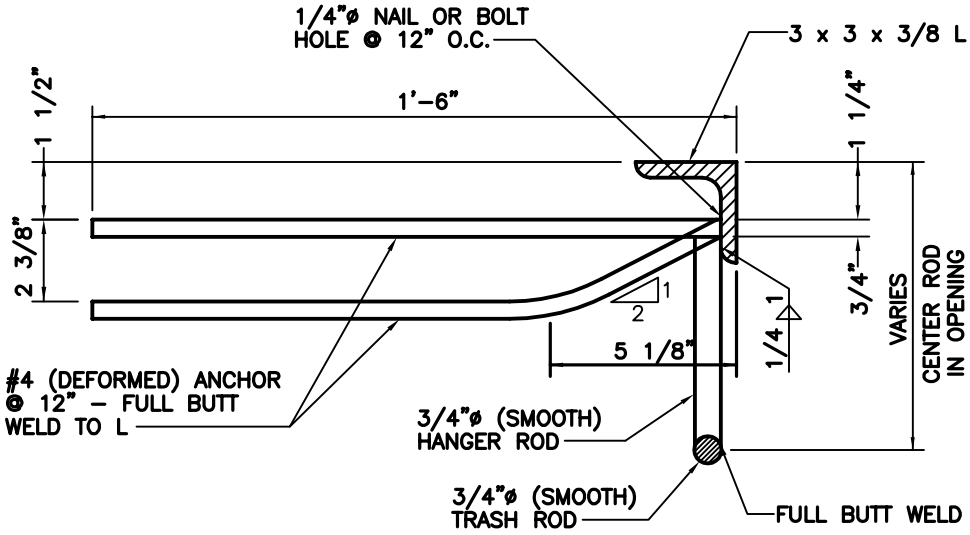

SECTION

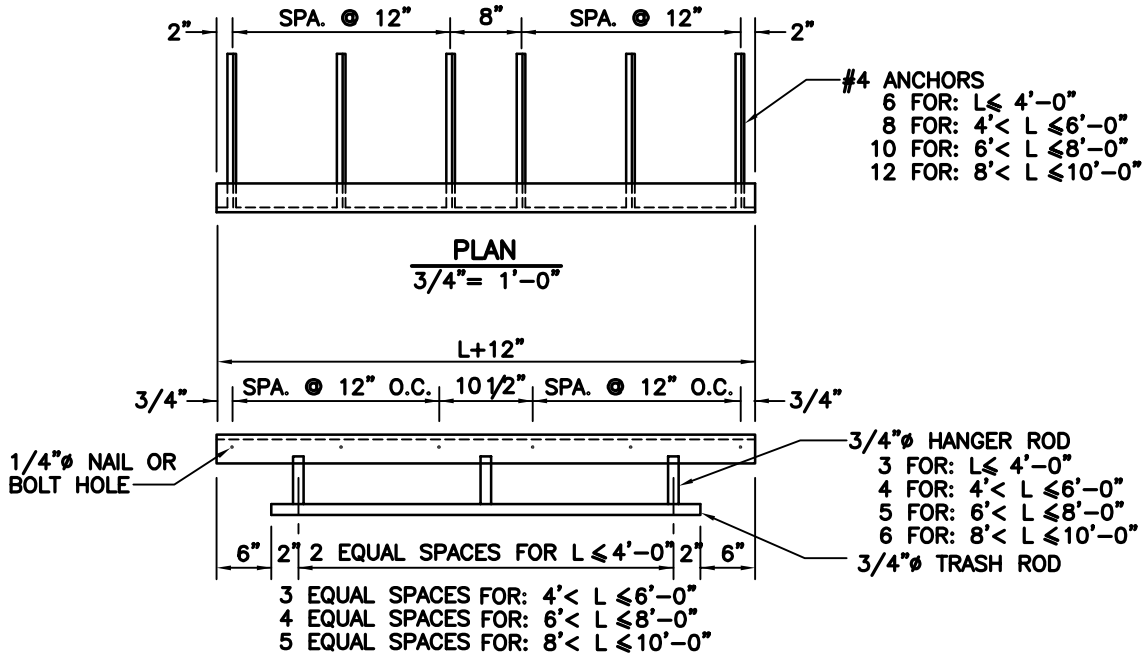

FRONT ELEV.

NOTES:

1. STRUCTURAL STEEL SHALL BE GRADE A-36
2. EXPOSED STEEL SURFACES TO BE FINISHED SMOOTH.
3. HOT DIP GALVANIZE ASSEMBLY. CHIPPING NOT REQUIRED ON ANCHOR WELDS.
4. NAILS OR BOLTS USED TO ANCHOR ANGLE ASSEMBLY TO FORM SHALL BE REMOVED OR CUT OFF FLUSH WITH SURFACE OF ANGLE. DO NOT MAR GALVANIZING.
5. DIMENSION "L" REPRESENTS THE INSIDE INLET DIMENSION.

JDG Approved	1/1/12 Date	City of Columbia Public Works Department	INLET OPENING TRASH RACK	500.03
Revisions				