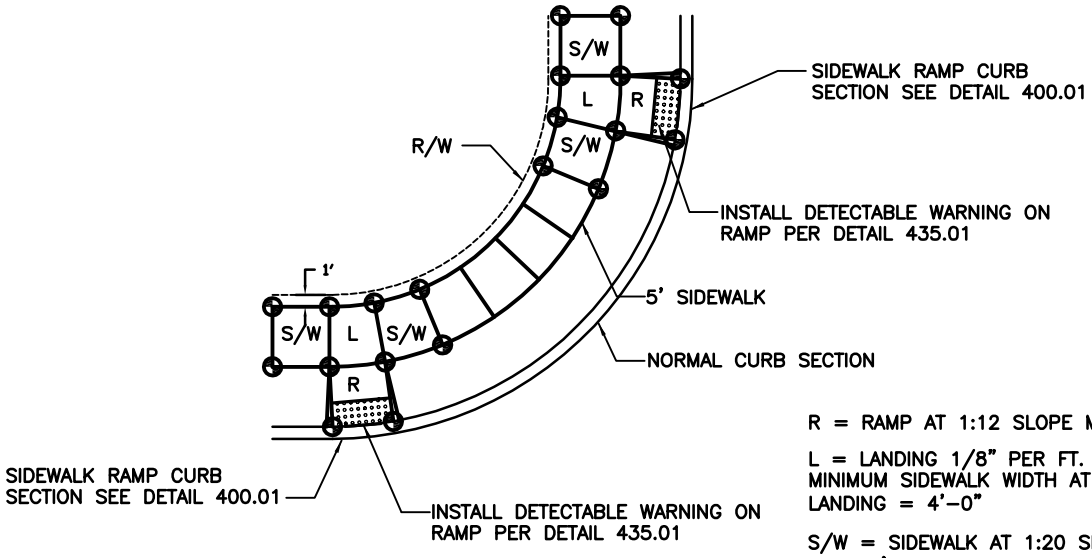

R = RAMP AT 1:12 SLOPE MAX

L = LANDING 1/8" PER FT. CROSS SLOPE
MINIMUM SIDEWALK WIDTH AT
LANDING = 4'-0"

S/W = SIDEWALK AT 1:20 SLOPE MAX
FOR 20' MAX LONGITUDINALLY

1. ⊕ DENOTES SPOT ELEVATION REQUIRED

TYPE "A" SIDEWALK WITH GRASS PARKWAY

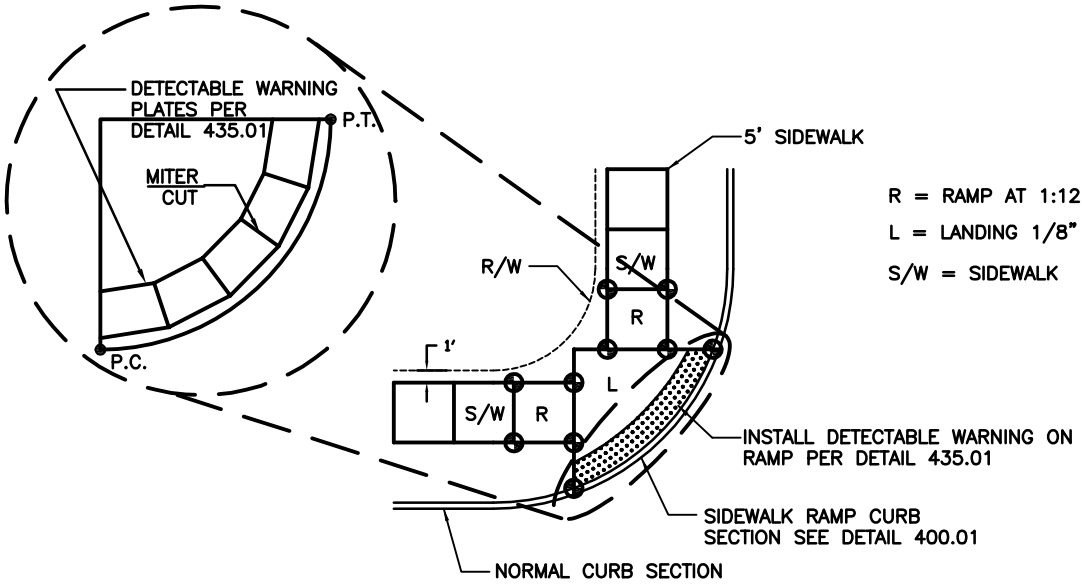

R = RAMP AT 1:12 SLOPE MAX

L = LANDING 1/8" PER FT. CROSS SLOPE

S/W = SIDEWALK

1. ⊕ DENOTES SPOT ELEVATION REQUIRED

TYPE "B" SIDEWALK WITH GRASS PARKWAY

NOTE:
1. LANDING CROSS SLOPE SHALL NOT EXCEED 2.00%.

JDG Approved	1/1/12 Date	City of Columbia Public Works Department	SIDEWALK RAMP PLAN VIEW Sidewalk with Grass Parkway (Type A &B)	430.03
Revisions				