City of Columbia

701 East Broadway, Columbia, Missouri 65201

Agenda Item Number: B 146-15
Department Source: Public Works
To: City Council
From: City Manager & Staff
Council Meeting Date: 6/1/2015
Re: Waterline Replacement Contract with Consolidated Public Water Supply District No. 1 - Scott Boulevard Phase 3 (Vawter School Road to Route KK)

Documents Included With This Agenda Item

Council memo, Resolution/Ordinance, Exhibit to Resolution/Ordinance
Supporting documentation includes: Map

Executive Summary

Authorizing a waterline replacement contract with Consolidated Public Water Supply District No. 1 (CPWSD No. 1) relating to the Scott Boulevard Phase 3 Road Improvement project.

Discussion

The City proposes to relocate the existing 8" waterline beginning approximately 400 feet south of the roundabout at Vawter School Road, and continuing south for approximately 300 feet. A new 8" waterline will be installed commencing at the Kurzejeski property, and extending southerly to the Consolidated Public Water Supply District No. 1 property located north of Thornbrook Ridge. Additionally, the City will install a new 12" waterline commencing at the Columbia Public School property south of Thornbrook Terrace and extending southerly to the south side of the future roundabout at State Route KK.

City staff and representatives of CPWSD No. 1 have negotiated an agreement under which the City will replace the waterline as part of the Scott Boulevard Phase 3 project in accordance with plans and specifications prepared by City staff and reviewed by CPWSD No. 1 appointed consultant engineers. The City will pay all engineering fees, attorney fees and other reasonable costs and expenses incurred by CPWSD No. 1 for a not to exceed amount of $25,000.00.

Fiscal Impact

Short-Term Impact: The City will pay all engineering fees, attorney fees and other reasonable costs and expenses incurred by CPWSD No. 1 for a not to exceed amount of $25,000.00 to be paid from the Scott Boulevard Phase 3 capital improvement project account.

Long-Term Impact: Minimal costs.

City of Columbia

701 East Broadway, Columbia, Missouri 65201

Vision, Strategic & Comprehensive Plan Impact

Vision Impact: Economic Development, Transportation.
Strategic Plan Impact: Economic Development, Growth Management, Infrastructure.
Comprehensive Plan Impact: Land Use & Growth Management, Infrastructure, Mobility, Connectivity, and Accessibility, Economic Development.

Suggested Council Action

Passage of the ordinance authorizing a waterline replacement contract with Consolidated Public Water Supply District No. 1 relating to the Scott Boulevard Phase 3 Road Improvement project.

Legislative History

5/04/15 (Ord 22424) Authorizing a pole removal and relocation agreement with Union Electric Company relating to the Scott Boulevard Phase 3 Street Improvement Project
2/02/15 (Ord 22357) Declaring the need to acquire additional easements for construction of the Scott Boulevard Phase 3 Street Improvement Project, from Vawter School Road to Route KK
2/02/15 (Ord 22356) Declaring the need to acquire additional easements for construction of the Scott Boulevard Phase 3 Street Improvement Project
11/17/14 (Ord 22272) authorizing the acquisition of easements for the Scott Blvd Phase 3 Project
04/03/14 Interested parties meetings (2)
09/17/12 (R153-12) Authorizing engineering services agreement with Burns & McDonnell for preliminary & final design of Scott Boulevard bridge over Mill Creek, Scott Boulevard Phase 3 Project
4-20-09 (R52-09) Public hearing for construction of street improvements to Scott Boulevard (Phase 2) Brookview Terrace to Vawter School Road, and (Phase 3) Vawter School Rd to State Rt KK
12-02-08 - Interested parties meeting (1)

Department Approved

City Manager Approved

Introduced by _____

First Reading _____ Second Reading _____

Ordinance No. _____ Council Bill No. _____B 146-15_____

AN ORDINANCE

authorizing a contract with Consolidated Public Water Supply District No. 1 of Boone County, Missouri for replacement of a waterline along Scott Boulevard as part of the Scott Boulevard Phase 3 roadway improvement project; and fixing the time when this ordinance shall become effective.

BE IT ORDAINED BY THE COUNCIL OF THE CITY OF COLUMBIA, MISSOURI, AS FOLLOWS:

SECTION 1. The City Manager is hereby authorized to execute a contract with Consolidated Public Water Supply District No. 1 of Boone County, Missouri for replacement of a waterline along Scott Boulevard as part of the Scott Boulevard Phase 3 roadway improvement project. The form and content of the contract shall be substantially in the same form as set forth in "Attachment A" attached hereto.

SECTION 2. This ordinance shall be in full force and effect from and after its passage.

PASSED this _____ day of _____, 2015.

ATTEST:

_____ _____

City Clerk Mayor and Presiding Officer

APPROVED AS TO FORM:

_____

City Counselor

WATERLINE REPLACEMENT CONTRACT
(Scott Boulevard Phase 3)

THIS CONTRACT, made and entered into this _____ day of _____, 2015, by and between the CITY OF COLUMBIA, MISSOURI, a municipal corporation, hereinafter called "CITY," and CONSOLIDATED PUBLIC WATER SUPPLY DISTRICT NO. 1 OF BOONE COUNTY, MISSOURI, a Missouri public corporation, hereinafter called "DISTRICT:"

W I T N E S S E T H:

WHEREAS, the CITY has prepared plans for Road Improvements to be made in the Scott Boulevard road right-of-way (herein "Road Improvements"); and

WHEREAS, in connection with the aforesaid Road Improvements the parties desire to agree to the provisions contained herein in regard to replacing, relocating and abandoning portions of the existing waterlines of the DISTRICT.

NOW, THEREFORE, in consideration of the respective covenants of the parties and other valuable consideration, the receipt and sufficiency of which are hereby acknowledged, the undersigned do hereby mutually agree as follows:

1. REPLACEMENT: That in connection with making the aforesaid Road Improvements the CITY shall at CITY'S expense perform the following work:

a) Relocate the existing eight inch (8") waterline, of the DISTRICT between Roadway Improvement Plans Station 44 and 47; and

b) Install a new eight inch (8") waterline commencing at Kurzejeski Property at Roadway Improvement Plans Station 55 and extending southerly to the Consolidated Public Water Supply District No. 1 Property located north of Thornbrook Ridge; and

c) Install a new twelve inch (12") waterline commencing at Columbia Public School Property south of Thornbrook Terrace and extending southerly to the south side of the future roundabout at State Route KK and Scott Boulevard; and

d) Relocate the existing eight inch (8") waterline, of the DISTRICT from the new roundabout at Scott Boulevard in an westerly direction along the south right of way of State Route KK towards River Hills Road; and

e) Replace the existing fence at the DISTRICT property north of Thornbrook Ridge

The aforesaid work shall be performed in accordance with the plans attached hereto as Exhibit "A" and in accordance with the specifications attached hereto as Exhibit "B."

The CITY shall coordinate with DISTRICT anywhere existing grading is altered to ensure forty-eight inches (48") of burial depth over the eight inch (8") waterline that was installed as part of Scott Boulevard Phase 2 roadway project. If necessary the existing eight inch (8") waterline will be relocated; and

The CITY shall coordinate with DISTRICT anywhere existing grading is altered to ensure forty-eight inches (48") of burial depth over twelve inch (12") waterline that is installed between Roadway Improvement Plans Station 94 and 134. If necessary the existing twelve inch (12") waterline will be relocated.

2. EASEMENTS: That concurrently with the execution of this Contract, DISTRICT shall execute and deliver to CITY the original copy of the Street Easement attached hereto as Exhibit "C," Temporary Construction Easement attached hereto as Exhibit "D," Utility Easement attached hereto as Exhibit "E," and made a part hereof.

That before commencing the aforesaid work, CITY shall procure execution of the original copy of each of the Easement for Utility Purposes attached hereto as Exhibit "F," Exhibit "G," Exhibit "H" and Exhibit "I" and record the same in the office of the Recorder of Deeds of Boone County, Missouri. CITY agrees that it will not execute any document terminating or amending any of the aforesaid easements before the work specified herein has been completed without the prior written consent of DISTRICT.

3. INSPECTION: CITY agrees to give to DISTRICT not less than seventy-two (72) hours prior written notice of CITY'S intention to perform work in replacing the

aforesaid waterlines and DISTRICT shall have the right to have a representative present to inspect the replacement work as the same is being done.

4. DISTRICT COST: That the CITY shall pay to DISTRICT all engineering fees, attorney fees and other reasonable costs and expenses incurred by DISTRICT in connection with the matters referred to herein and CITY shall pay said amount to DISTRICT upon being furnished with an itemized list of said costs and expenses, the total amount of said costs and expenses shall not exceed the sum of $25,000.00.

5. WATER SERVICE DISRUPTION: CITY agrees that in performing the aforesaid work CITY will perform said work in such a manner as to minimize the disruption of water service to the customers of the DISTRICT.

6. WATERLINE TESTING: DISTRICT will furnish water to the aforesaid waterlines in connection with flushing and testing said waterlines in accordance with the rules and regulations of the Missouri Department of Natural Resources.

7. OWNERSHIP: That upon completion of the aforesaid work in accordance with the provisions contained herein the aforesaid replaced waterlines shall be deemed transferred to and become the waterlines of the DISTRICT.

8. CORRECTIVE WORK: CITY shall promptly give DISTRICT written notice of when the Scott Boulevard project has been completed. CITY shall repair or replace at CITY'S expense any defective work or materials installed under this Contract which arise or become apparent within one (1) year after the completion of the aforesaid Road Improvements and in addition CITY shall perform such backfilling work, erosion control work and cleanup work which the DISTRICT determines is needed within one (1) year after the Road Improvements have been completed. CITY agrees to indemnify and hold DISTRICT harmless from any loss or damage arising out of or resulting from the failure of the CITY to perform when due its obligations under this paragraph provided that DISTRICT notifies CITY of such loss or damage within one (1) year of completion of the Scott Boulevard project.

9. ENFORCEMENT IN EQUITY: It is agreed that in the event of any controversy concerning the rights or obligations of the parties hereto under this contract, such rights or obligations may be enforceable in law or in equity, or both;

provided however, such remedies shall be cumulative and not exclusive, and shall be in addition to any other remedies which the parties may have.

10. LITIGATION EXPENSES: In the event of any litigation between the parties in regard to the provisions of this contract, the prevailing party in said litigation shall have the right to recover from the other party all reasonable litigation expenses including a reasonable attorney fee.

11. JURISDICTION AND VENUE: The jurisdiction and venue of any dispute under the terms of this contract shall be in the Circuit Court of Boone County, Missouri.

12. SUCCESSORS AND ASSIGNS: This contract shall be binding upon the parties hereto and their successors and assigns.

IN WITNESS WHEREOF, the parties have hereunto executed this contract the day and year first above written.

CITY:

CITY OF COLUMBIA, MISSOURI

BY: _____
MIKE MATTHES, City Manager

ATTEST:

_____
SHEELA AMIN, City Clerk

APPROVED AS TO FORM:

_____
NANCY THOMPSON, City Counselor

I hereby certify that the above expenditure is within the purpose of the appropriation to which it is charged, Account No. 440-8800-528.49-90, C00274, and that there is an unencumbered balance to the credit of such appropriation sufficient to pay therefor.

_____
JOHN BLATTEL, Director of Finance

DISTRICT:

CONSOLIDATED PUBLIC WATER SUPPLY DISTRICT NO. 1 OF BOONE COUNTY, MISSOURI

BY: _____
JEROME GLASCOCK, President

ATTEST:

_____
JANET SEARS, Clerk

STATE OF MISSOURI)
) SS.
COUNTY OF BOONE)

On this _____ day of _____, 2015, before me appeared MIKE MATTHES, to be personally known, who, being by me duly sworn, did say that he is the City Manager of the City of Columbia, Missouri, and that the seal affixed to the foregoing instrument is the corporate seal of the City and that this instrument was signed and sealed on behalf of the City by authority of its City Council and the City Manager acknowledged this instrument to be the free act and deed of the City.

IN TESTIMONY WHEREOF, I have hereunto set my hand and affixed my official seal, at my office in Columbia, Missouri, the day and year first above written.

My commission expires:

_____

_____
Notary Public

STATE OF MISSOURI)
) SS.
COUNTY OF BOONE)

On this _____ day of _____, 2015, before me appeared JEROME GLASCOCK, to me personally known, who, being by me duly sworn, did say that he is the President of CONSOLIDATED PUBLIC WATER SUPPLY DISTRICT NO. 1 OF BOONE COUNTY, MISSOURI, a Missouri public corporation, and that the seal affixed to the foregoing instrument is the corporate seal of said corporation and that said instrument was signed and sealed in behalf of said corporation by authority of its Board of Directors and the said President acknowledged said instrument to be the free act and deed of said corporation.

IN TESTIMONY WHEREOF, I have hereunto set my hand and affixed my official seal, at my office in Columbia, Missouri, the day and year first above written.

My commission expires:

_____

_____
Notary Public

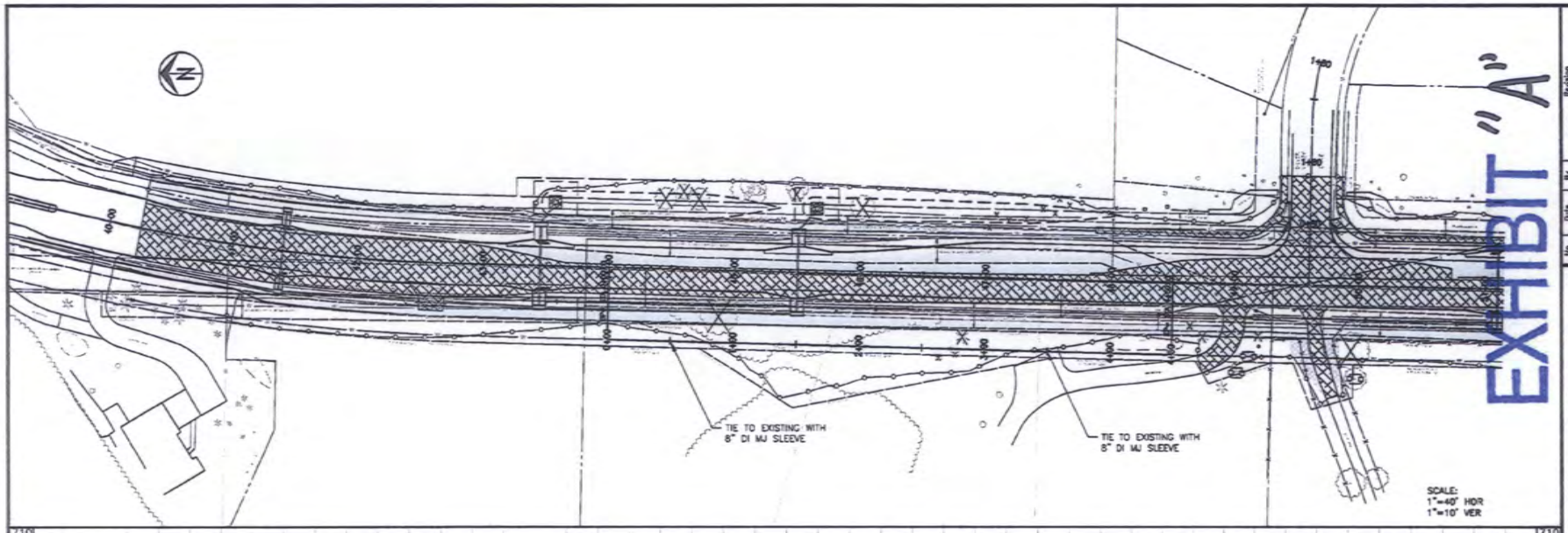

EXHIBIT "A"

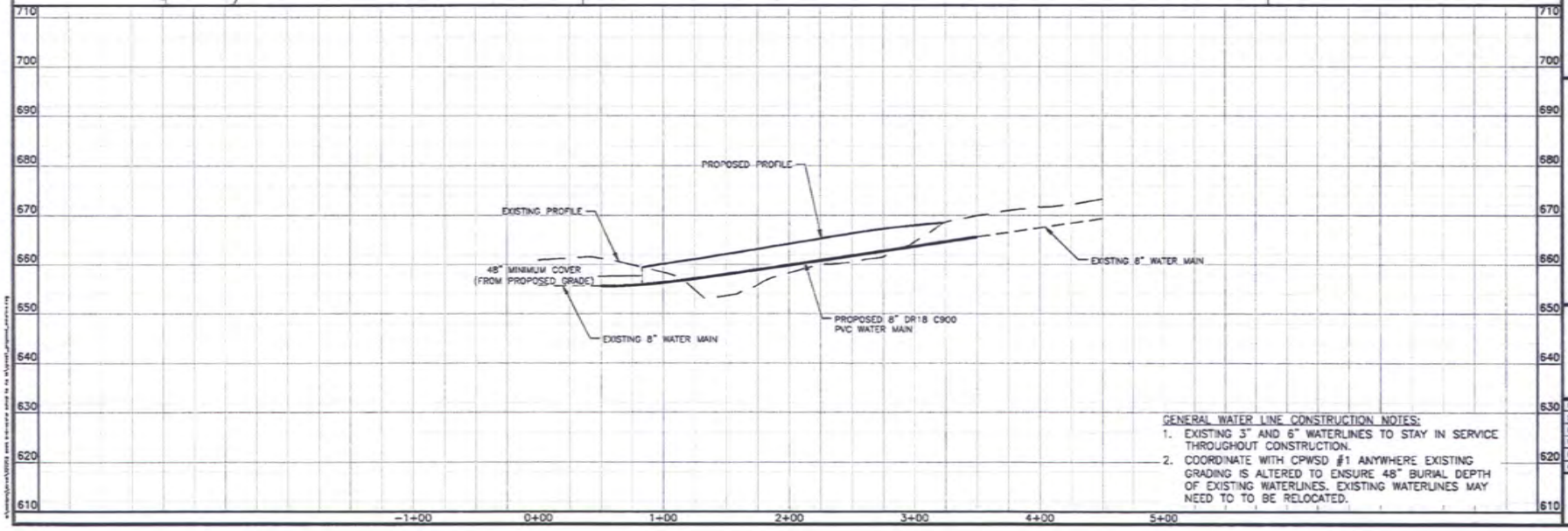

GENERAL WATER LINE CONSTRUCTION NOTES:

1. EXISTING 3" AND 6" WATERLINES TO STAY IN SERVICE THROUGHOUT CONSTRUCTION.
2. COORDINATE WITH CPWSD #1 ANYWHERE EXISTING GRADING IS ALTERED TO ENSURE 48" BURIAL DEPTH OF EXISTING WATERLINES. EXISTING WATERLINES MAY NEED TO TO BE RELOCATED.

No.	Date	By	Revision

SCOTT BOULEVARD PHASE III

Consolidated Public Water Supply District No. 1
Waterline Replacement Plan & Profile
Alignment B

City of Columbia, Missouri

Department of Public Works

File No.	32-02-02
Scale:	As Shown
Date:	4/16/2015
Des.	B.F.R.
Dwn.	B.F.R.
Ckd.	CPWSD 1

Sheet
1 of 9

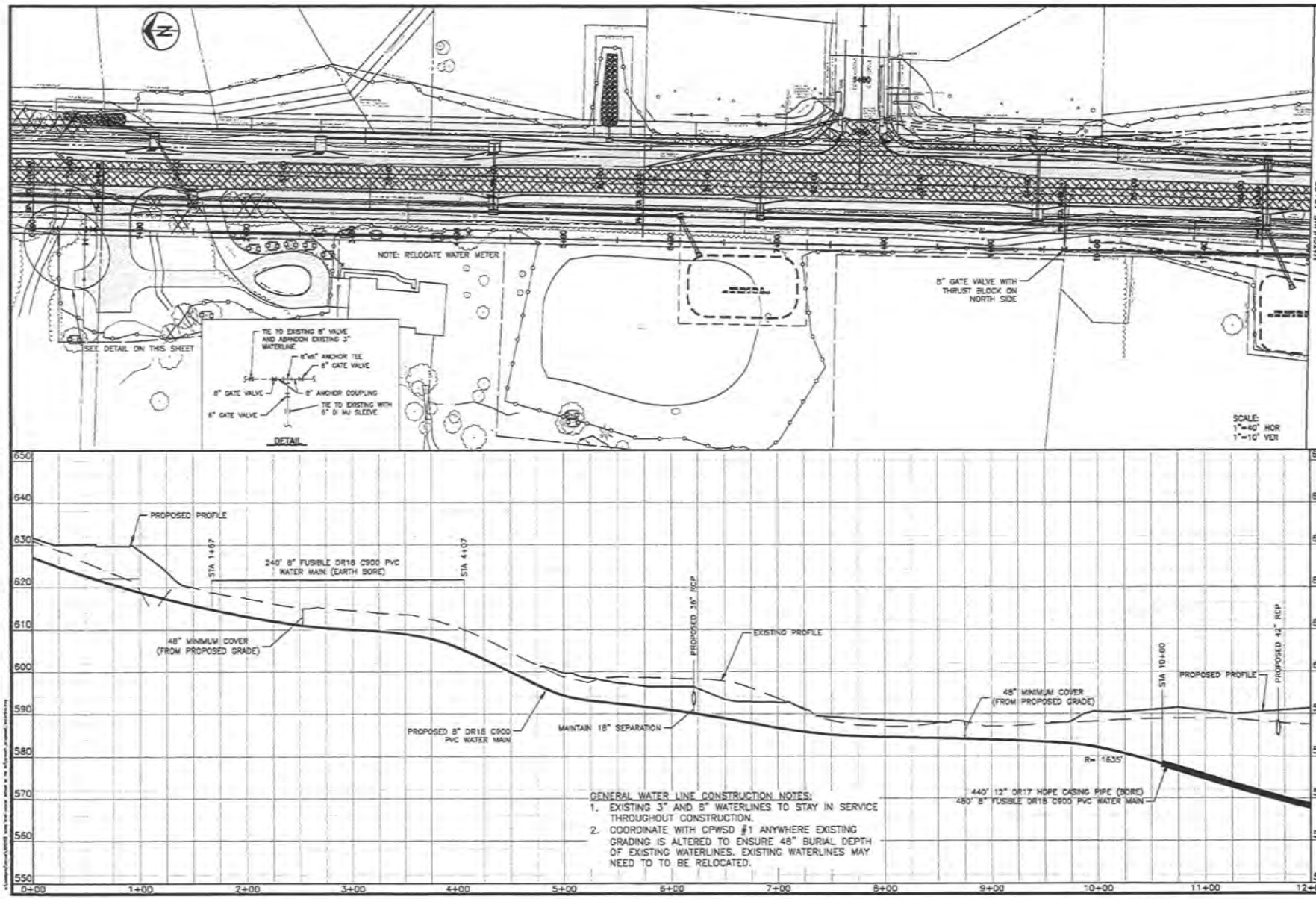

No.	Date	By	Revision

SCOTT BOULEVARD PHASE III

Consolidated Public Water Supply District No. 1
Waterline Replacement Plan & Profile
Alignment A - Sta. 0+00 to Sta. 12+00

City of Columbia, Missouri

Department of Public Works

File No.	22-02-02
Scale:	As Shown
Date:	4/15/2015
Des.	S.F.R.
Dwn.	S.F.R.
Chk.	CPWSD 1

Sheet 2 of 9

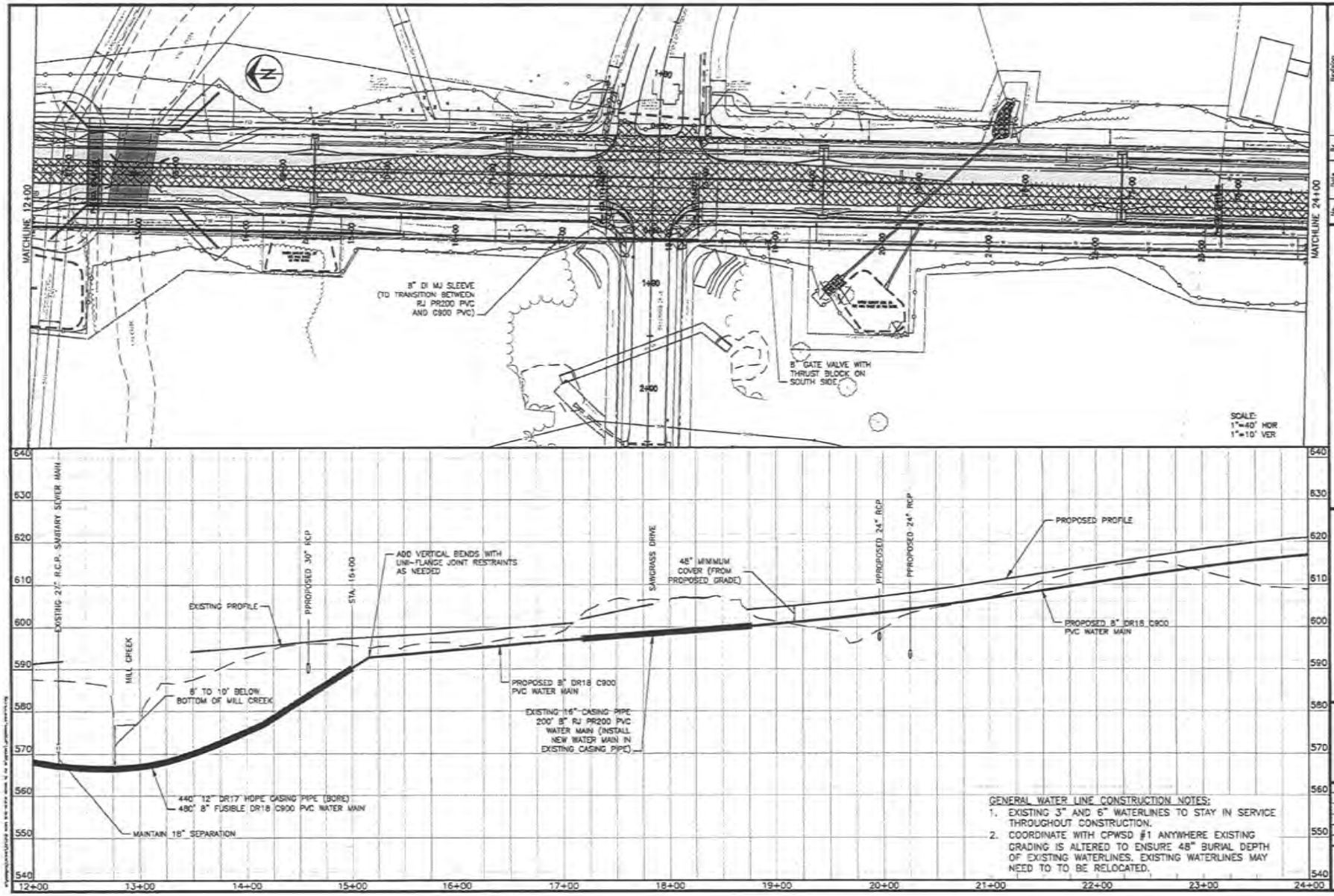

GENERAL WATER LINE CONSTRUCTION NOTES:

1. EXISTING 3" AND 6" WATERLINES TO STAY IN SERVICE THROUGHOUT CONSTRUCTION.
2. COORDINATE WITH CPWSD #1 ANYWHERE EXISTING GRADING IS ALTERED TO ENSURE 48" BURIAL DEPTH OF EXISTING WATERLINES. EXISTING WATERLINES MAY NEED TO TO BE RELOCATED.

No.	Date	By	Revision

SCOTT BOULEVARD PHASE III

Consolidated Public Water Supply District No. 1
Waterline Replacement Plan & Profile
Alignment A - Sta. 12+00 to Sta. 24+00

City of Columbia, Missouri

Department of Public Works

File No.	32-02-02
Scale:	As Shown
Date:	4/16/2015
Des.	B.F.R.
Dwn.	B.F.R.
Chk.	CPWSD 1

Sheet 3 of 9

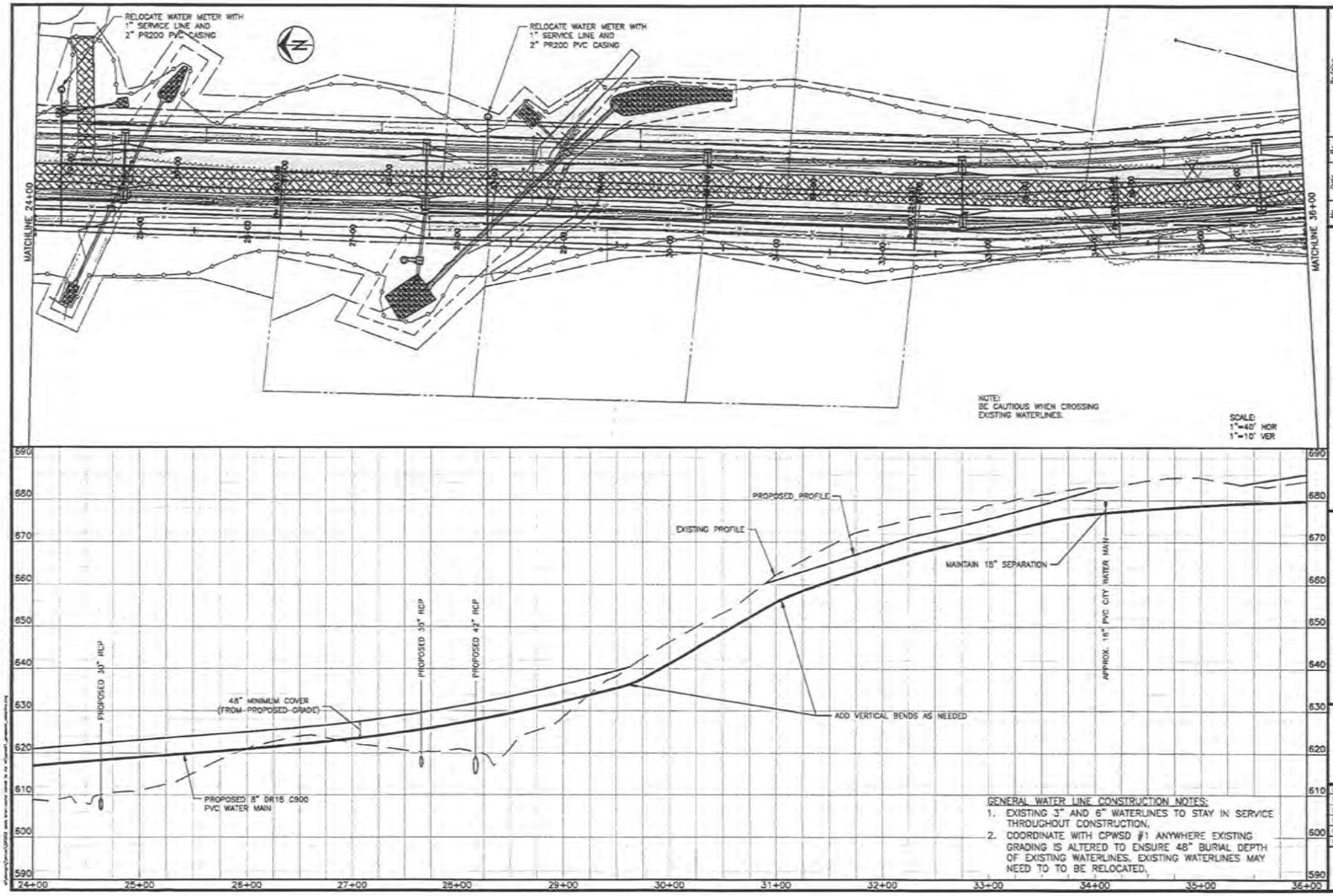

GENERAL WATER LINE CONSTRUCTION NOTES:

1. EXISTING 3" AND 6" WATERLINES TO STAY IN SERVICE THROUGHOUT CONSTRUCTION.
2. COORDINATE WITH CPWSD #1 ANYWHERE EXISTING GRADING IS ALTERED TO ENSURE 48" BURIAL DEPTH OF EXISTING WATERLINES. EXISTING WATERLINES MAY NEED TO TO BE RELOCATED.

No.	Date	By	Revision

SCOTT BOULEVARD PHASE III

Consolidated Public Water Supply District No. 1
Waterline Replacement Plan & Profile
Alignment A - Sta. 24+00 to Sta. 36+00

City of Columbia, Missouri

Department of Public Works

File No.	32-62-02
Scale:	As Shown
Date:	4/16/2015
Des.	B.F.K.
Dwn.	B.F.K.
Chk.	CPWSD 1

Sheet 4 of 9

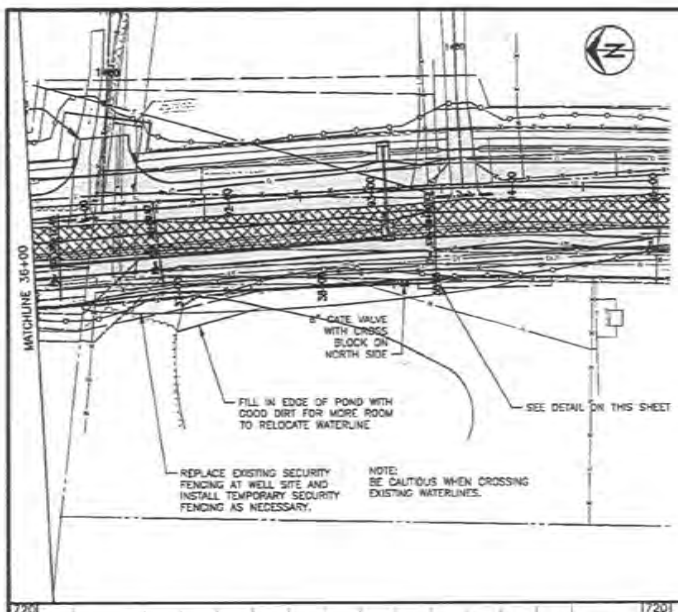

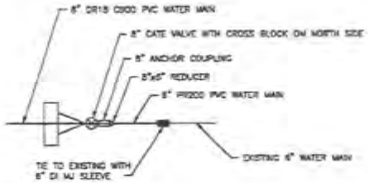

DETAIL

SCALE:
1"=40' HOR
1"=10' VER

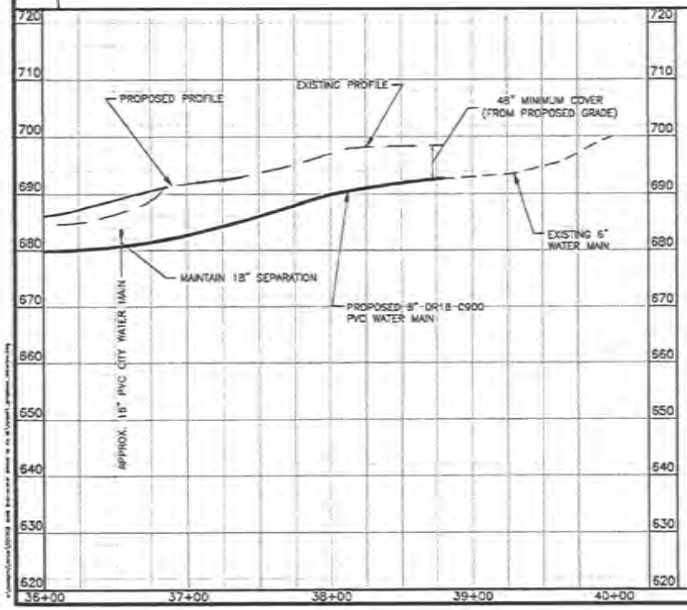

GENERAL WATER LINE CONSTRUCTION NOTES:

1. EXISTING 3" AND 6" WATERLINES TO STAY IN SERVICE THROUGHOUT CONSTRUCTION.
2. COORDINATE WITH CPWSD #1 ANYWHERE EXISTING GRADING IS ALTERED TO ENSURE 48" BURIAL DEPTH OF EXISTING WATERLINES. EXISTING WATERLINES MAY NEED TO TO BE RELOCATED.

No.	Date	By	Revision

SCOTT BOULEVARD PHASE III

Consolidated Public Water Supply District No. 1
Waterline Replacement Plan & Profile
Alignment A - Sta. 36+00 to E.O.P. Sta. 38+60.73

City of Columbia, Missouri

Department of Public Works

File No.	32-02-02
Scale:	As Shown
Date:	4/15/2013
Des.	S.F.R.
Dwn.	S.F.R.
Chk.	CPWSD 1

Sheet
5 of 9

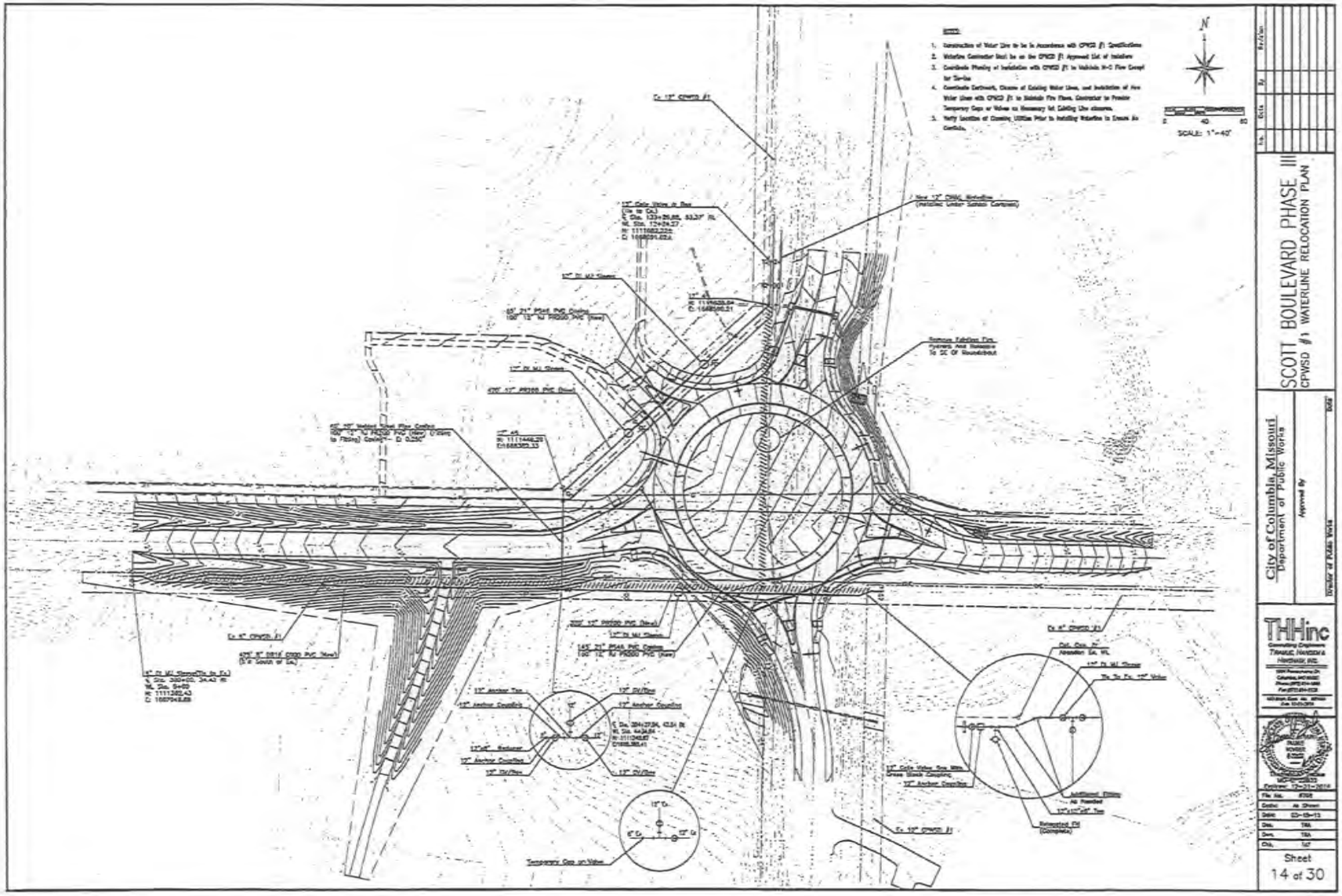

City of Columbia, Missouri
Department of Public Works

Approved By

Director of Public Works

Date

SCOTT BOULEVARD PHASE III
CPWSD #1 WATERLINE RELOCATION PLAN

THHinc
Consulting Engineers
TRAVIS, HANSON & HAWKINS, INC.

File No.	8708
Scale	As Shown
Date	03-19-13
Des.	TRA
Dwn.	TRA
Chk.	MT

Sheet
14 of 30

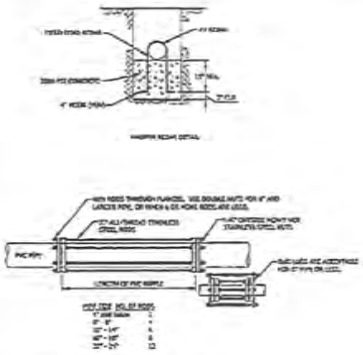

HARPIN REBAR DETAIL

TIEBACK ROD & HARPIN REBAR DETAILS

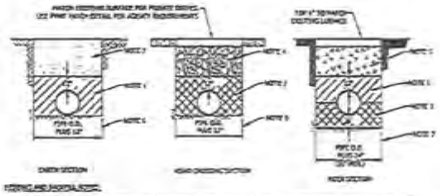

DIRT SECTION

ROAD CROSSING SECTION

ROCK SECTION

PIPE TRENCHING DETAIL

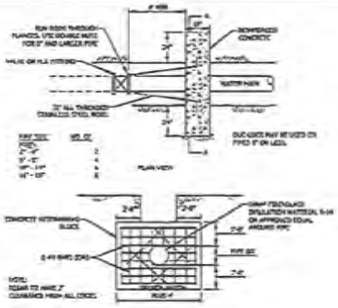

PLAN VIEW

SECTION A-A

RESTRAINING BLOCK DETAIL

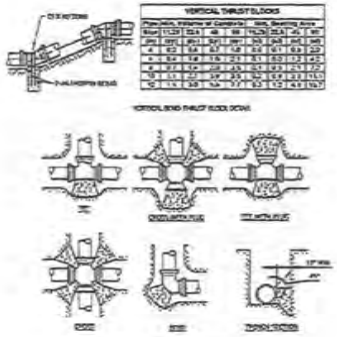

VERTICAL BEND THRUST BLOCK DETAIL

HORIZONTAL BEND THRUST BLOCK DETAIL

THRUST BLOCKING DETAIL

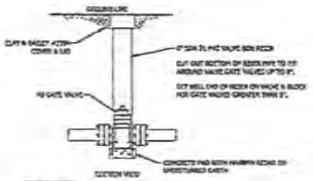

SECTION VIEW

GATE VALVE AND VALVE BOX DETAIL

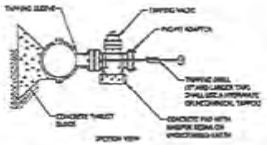

SECTION VIEW

TAPPING SLEEVE AND VALVE ASSEMBLY

GENERAL CONSTRUCTION NOTES

STANDARD CONSTRUCTION DETAILS

CONSOLIDATED WATER

SCOTT BOULEVARD PHASE III

Consolidated Public Water Supply District No. 1

Detail Sheet

City of Columbia, Missouri

Department of Public Works

Sheet 6 of 9

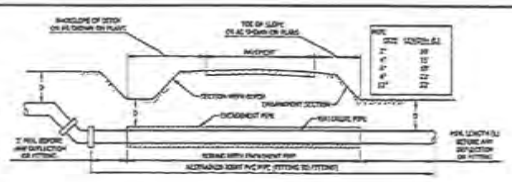

TYPICAL BORING UNDER STATE HIGHWAY

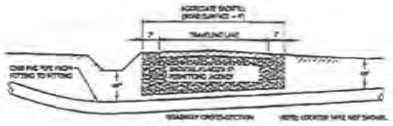

TYPICAL OPEN CUT ROAD CROSSING

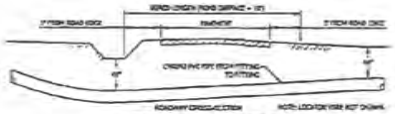

TYPICAL BORED ROAD CROSSING

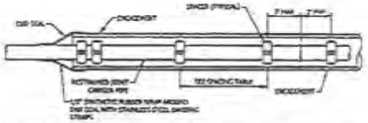

SPACING TABLE		

ENCASEMENT PIPE SPACER DETAIL

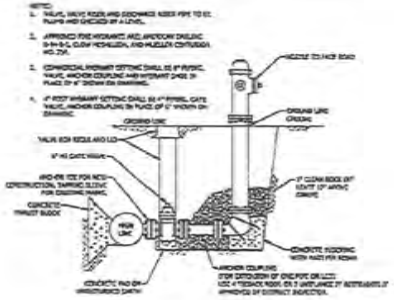

FIRE HYDRANT DETAIL

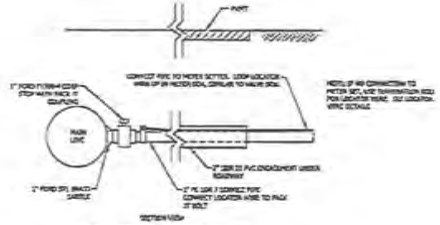

1" SERVICE LINE ROADWAY CROSSING

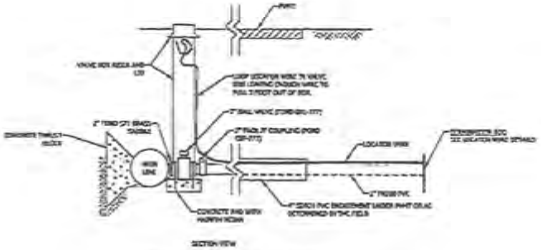

2" SERVICE LINE ROADWAY CROSSING DETAIL

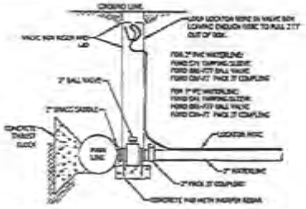

2" CONNECTION TO MAIN

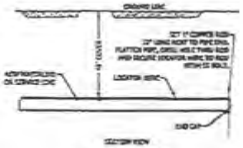

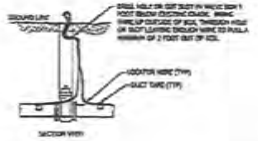

LOCATOR WIRE DETAILS

STANDARD CONSTRUCTION DETAILS

CONSOLIDATED WATER

JULY 2014

2

Revision	Date	By	Rev.

SCOTT BOULEVARD PHASE III

Consolidated Public Water Supply District No. 1

Detail Sheet

City of Columbia, Missouri

Department of Public Works

File No.	22-02-03
Scale	As Shown
Date	4/16/2015
Des.	B.F.B.
Dwn.	B.F.B.
Chk.	DWG 1

Sheet

7 of 9

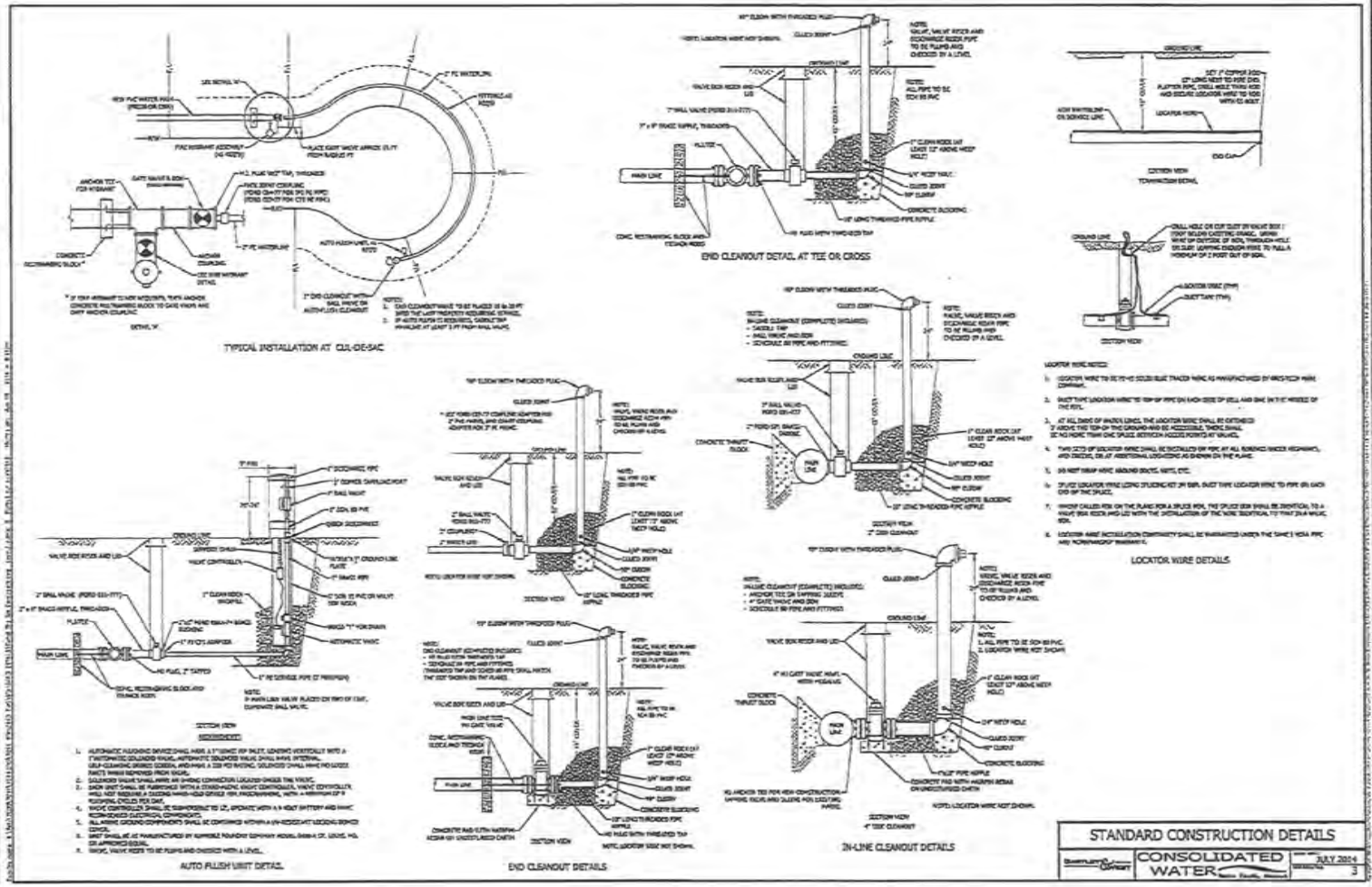

STANDARD CONSTRUCTION DETAILS

CONSOLIDATED WATER

JULY 2004

No.	Date	By	Revision

SCOTT BOULEVARD PHASE III

Consolidated Public Water Supply District No. 1

Detail Sheet

City of Columbia, Missouri

Department of Public Works

File No.	20-02-02
Scale:	As Shown
Date:	4/19/2010
Des.	B.F.R.
Dwn.	B.F.R.
Chk.	DRCD 1

Sheet

8 of 9

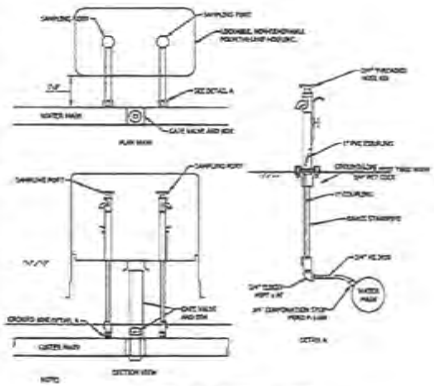

WATER SAMPLING STATION

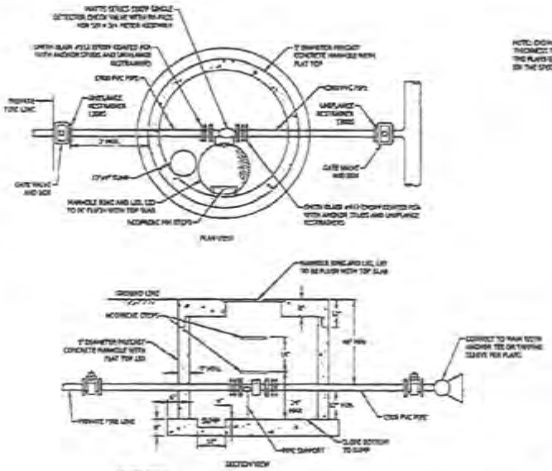

DETECTOR CHECK VALVE MANHOLE

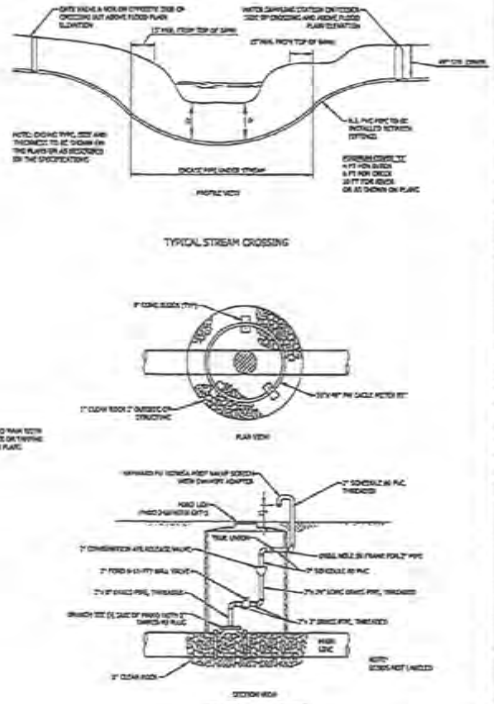

TYPICAL STREAM CROSSING

AIR RELEASE PIT DETAIL

STANDARD CONSTRUCTION DETAILS

CONSOLIDATED WATER

JULY 2014

4

SCOTT BOULEVARD PHASE III

Consolidated Public Water Supply District No. 1

Detail Sheet

City of Columbia, Missouri

Department of Public Works

Sheet 9 of 9

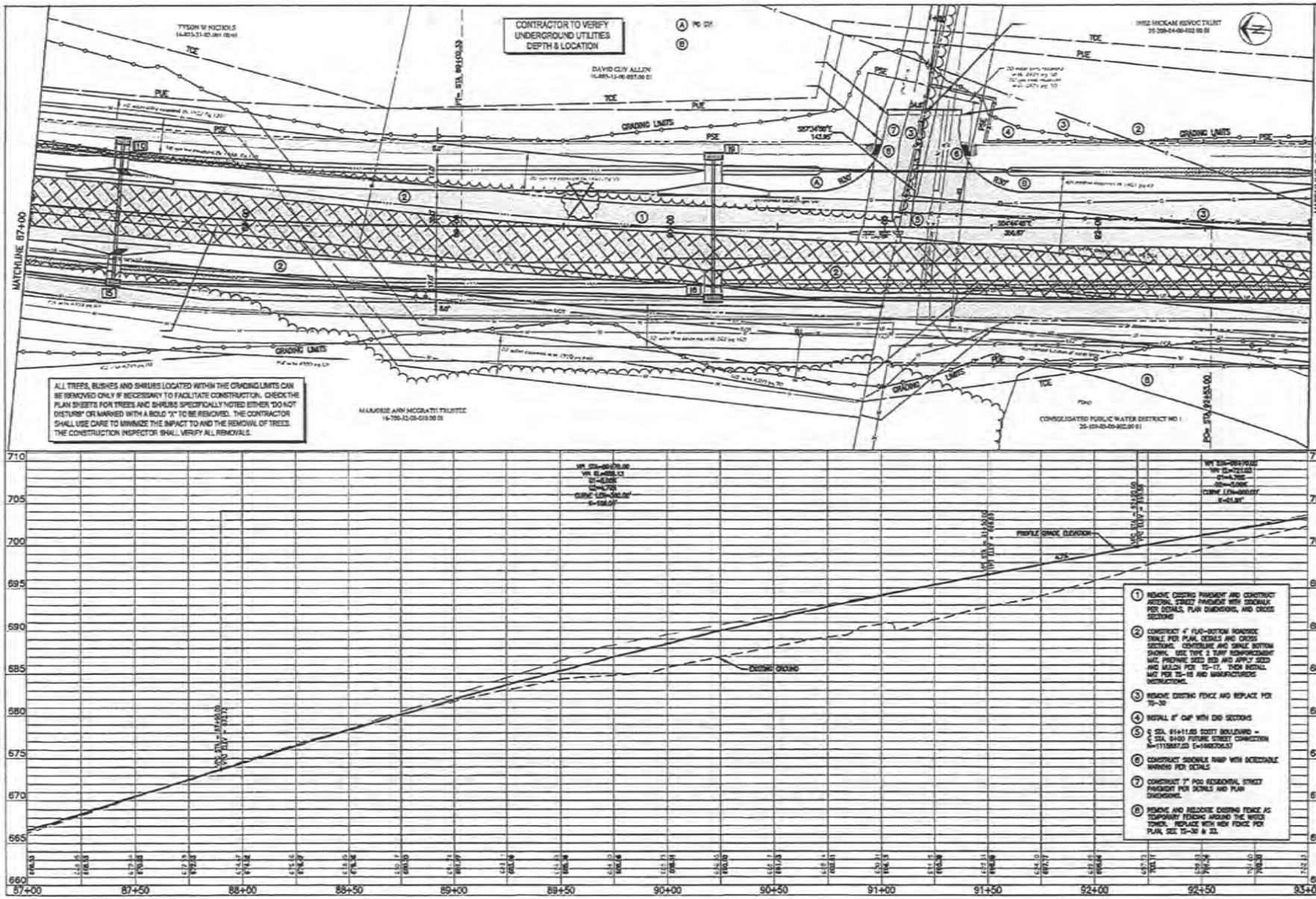

No.	Date	By	Revision

SCOTT BOULEVARD PHASE III

Consolidated Public Water Supply District No. 1
Fence Relocation Plan Sheet

City of Columbia, Missouri

Department of Public Works

File No.	32-03-03
Scale	1" = 20'
Date	X/XX/XX
Des.	A.K.H.
Dwn.	J.L.R.
Chk.	S.A.R.

Sheet 21 of ???

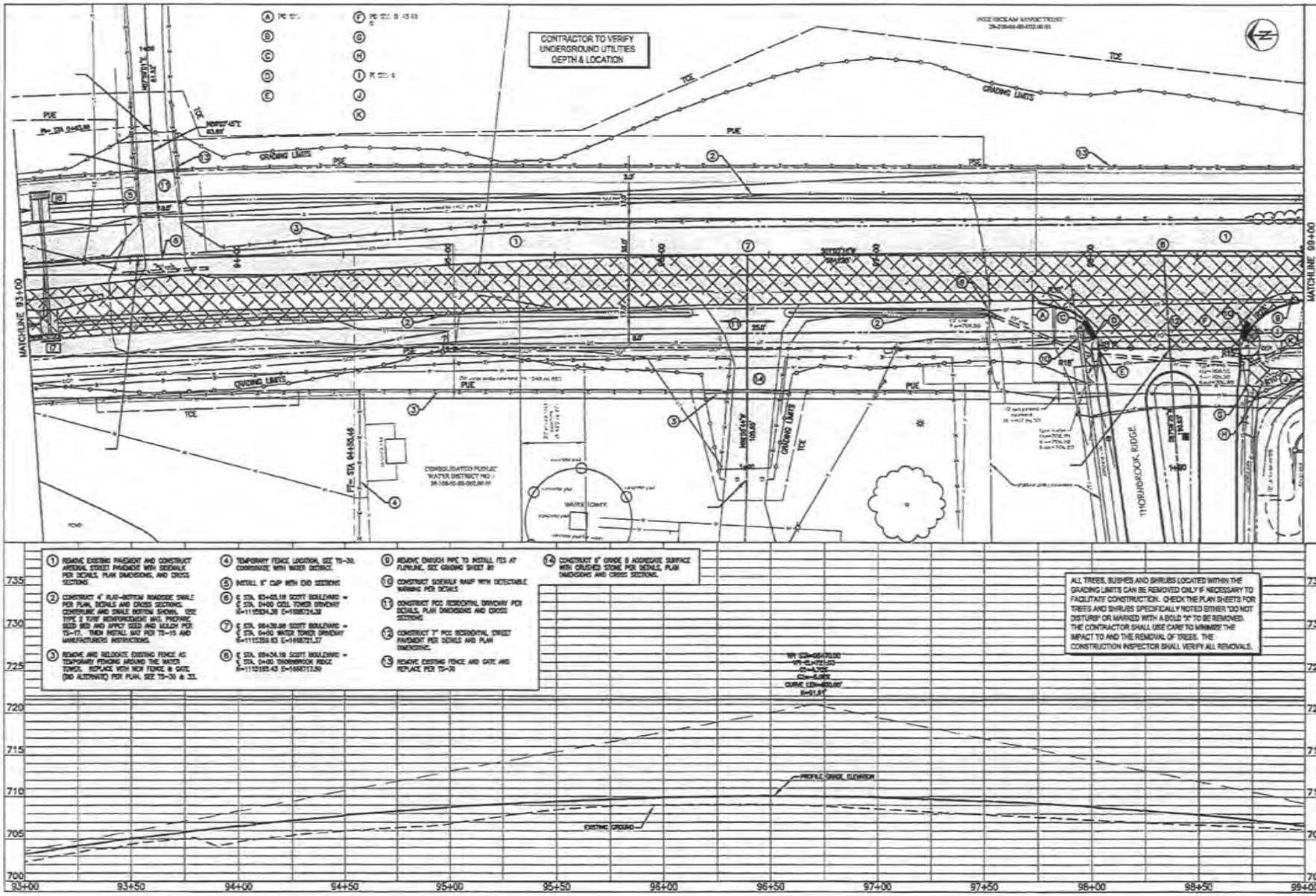

1. REMOVE EXISTING PAVEMENT AND CONSTRUCT ARTERIAL STREET PAVEMENT WITH SIDEWALK PER DETAILS, PLAN DIMENSIONS, AND CROSS SECTIONS.
2. CONSTRUCT 4' FLAT-BOTTOM ROADSIDE SWALE PER PLAN, DETAILS AND CROSS SECTIONS. CENTERLINE AND SWALE BOTTOM SHOWN. USE TYPE 2 TURF REINFORCEMENT MAT. PREPARE SEED BED AND APPLY SEED AND MULCH PER TS-17. THEN INSTALL MAT PER TS-15 AND MANUFACTURERS INSTRUCTIONS.
3. REMOVE AND RELOCATE EXISTING FENCE AS TEMPORARY FENCING AROUND THE WATER TOWER. REPLACE WITH NEW FENCE & GATE (BID ALTERNATE) PER PLAN, SEE TS-30 & 33.
4. TEMPORARY FENCE LOCATION, SEE TS-30. COORDINATE WITH WATER DISTRICT.
5. INSTALL 8" CUP WITH END SECTIONS
6. ℄ STA. 93+05.18 SCOTT BOULEVARD = ℄ STA. 0+00 CELL TOWER DRIVEWAY N=1115534.38 E=1668724.38
7. ℄ STA. 95+30.00 SCOTT BOULEVARD = ℄ STA. 0+00 WATER TOWER DRIVEWAY N=1115359.93 E=1668721.37
8. ℄ STA. 99+34.18 SCOTT BOULEVARD = ℄ STA. 0+00 THORNBROOK RIDGE N=1115185.43 E=1668717.50
9. REMOVE CMUGH PIPE TO INSTALL TES AT FLOWLINE, SEE GRADING SHEET 80
10. CONSTRUCT SIDEWALK RAMP WITH DETECTABLE WARNING PER DETAILS
11. CONSTRUCT PCC RESIDENTIAL DRIVEWAY PER DETAILS, PLAN DIMENSIONS AND CROSS SECTIONS
12. CONSTRUCT 7" PCC RESIDENTIAL STREET PAVEMENT PER DETAILS AND PLAN DIMENSIONS.
13. REMOVE EXISTING FENCE AND GATE AND REPLACE PER TS-30
14. CONSTRUCT 6" GRADE 5 AGGREGATE SURFACE WITH CRUSHED STONE PER DETAILS, PLAN DIMENSIONS AND CROSS SECTIONS.

ALL TREES, BUSHES AND SHRUBS LOCATED WITHIN THE GRADING LIMITS CAN BE REMOVED ONLY IF NECESSARY TO FACILITATE CONSTRUCTION. CHECK THE PLAN SHEETS FOR TREES AND SHRUBS SPECIFICALLY NOTED EITHER "DO NOT DISTURB" OR MARKED WITH A BOLD "X" TO BE REMOVED. THE CONTRACTOR SHALL USE CARE TO MINIMIZE THE IMPACT TO AND THE REMOVAL OF TREES. THE CONSTRUCTION INSPECTOR SHALL VERIFY ALL REMOVALS.

No.	Date	By	Revision

SCOTT BOULEVARD PHASE III

Consolidated Public Water Supply District No. 1
Fence Relocation Plan Sheet

City of Columbia, Missouri

Department of Public Works

File No.	32-02-02
Scale:	1" = 20'
Date:	X/XX/XX
Des.	A.N.N.
Dwn.	A.L.N.
Chk.	S.A.B.

Sheet
22 of ???

CONSOLIDATED WATER
Boone County, Missouri

WATER DISTRIBUTION SPECIFICATIONS
2013

CONSOLIDATED
PUBLIC WATER SUPPLY DISTRICT NO. 1
BOONE COUNTY, MISSOURI

STATE OF MISSOURI
KENNETH A. STUMPF
ENGINEER NO. E-19168
REGISTERED PROFESSIONAL ENGINEER

3-26-13

KENNETH A. STUMPF
PE LICENSE NO. E-19168

BARTLETT & WEST, INC.
MISSOURI CERTIFICATE OF AUTHORITY NO. 000167
1719 SOUTHRIDGE DRIVE, SUITE 100
JEFFERSON CITY, MO 65109

EXHIBIT "B"

SECTION 02512

WATER DISTRIBUTION SYSTEM
TABLE OF CONTENTS

1. GENERAL 2

1.1 SCOPE 2
1.2 SUBMITTALS 2

2. TRENCH EXCAVATION & BACKFILL 2

2.1 CONSTRUCTION STAKING 2
2.2 SITE PREPARATION 2
2.3 UNDERGOUND UTILITY LOCATIONS 2
2.4 SEPARATION OF WATER MAINS, SANITARY SEWERS AND STORM SEWERS 2
2.5 PIPE TRENCH EXCAVATION 3
2.6 BEDDING 5
2.7 BACKFILLING 6

3. PIPE, JOINTS AND FITTINGS 7

3.1 GENERAL 7
3.2 REFERENCES 7
3.3 PIPE 7
3.4 CASING PIPE 8
3.5 PIPE JOINTS 9
3.6 FITTINGS 10

4. VALVES, STRUCTURES AND APPURTENANCES 11

4.1 VALVES 11
4.2 VALVE BOX 12
4.3 DETECTOR CHECK VALVE 12
4.4 FIRE HYDRANT 12
4.5 AUTOMATIC FLUSHING UNIT 12
4.6 CLEANOUT 12
4.7 AIR RELEASE VALVE 12
4.8 WATER SAMPLING STATION 13
4.9 SERVICE METER & PIT 13

5. INSTALLATION 13

5.1 PIPES, FITTINGS, AND STRUCTURES 13
5.2 POLYETHYLENE WRAP (POLYWRAP) 15
5.3 LOCATOR WIRE 16
5.4 TAPPING SLEEVES 16
5.5 TAPPING SADDLES 16
5.6 TIEBACK RODS 16
5.7 CONCRETE THRUST BLOCKING 17

6. PIPE BORING 18

6.1 GENERAL REQUIREMENTS 18
6.2 CASING AND SPACER DATA 18
6.3 CASING INSTALLATION 19
6.4 PVC CARRIER PIPE INSTALLATION IN CASING 19
6.5 DIRECTIONAL BORING 19

7. TESTING OF PIPELINE 20

7.1 FIELD INSPECTION 20
7.2 WATER FOR TESTING 21
7.3 LINE CLEANING 21
7.4 DISINFECTING NEW WATER MAINS 21

7.5 DISINFECTION AFTER CONNECTION/REPAIR TO EXISTING WATERLINES 22
7.6 LEAKAGE TESTING 23

8. SITE RESTORATION 24

8.1 CLEAN UP 24
8.2 REVEGETATION 25

1. GENERAL

1.1 SCOPE

The work included in these specifications consists of the construction of a new water system. The work consists of the complete and satisfactory construction, testing and sterilization of the system, ready for use as shown and specified. Construction plans indicate all work that is to be performed.

The work includes the furnishing of all materials, tools, and equipment to install new water pipe, fittings, valves, valve covers, hydrants, meters and all incidental and miscellaneous work necessary to complete the project.

1.2 SUBMITTALS

Contractor shall submit to the District for review all materials proposed for the project, including pipe, valves, fire hydrants, fittings, and other items. Gravel, concrete, asphalt and seeding does not have to be submitted, but will be approved by the District Inspector prior to installation.

2. TRENCH EXCAVATION & BACKFILL

2.1 CONSTRUCTION STAKING

The District will stake water lines, hydrants, structures, etc. shown on the drawings. Service meter pits and service connections to mains will be field determined by the District Inspector.

2.2 SITE PREPARATION

A. Contractor shall remove trees, bushes, tree stumps, roots, debris, and other vegetation, as required for installations.

B. Contractor shall remove pavement, road surfacing, junk and structures.

C. Contractor shall mark adjacent property, fences, trees, and structures that are to be protected.

D. All salvageable materials, as determined by the District Inspector, shall be set aside for District pickup. All non-salvageable materials shall be removed from the site and properly disposed by Contractor.

2.3 UNDERGOUND UTILITY LOCATIONS

The Contractor shall comply with Sec. 319.015 - 319.050 RS MO and shall proceed with caution in the excavation and preparation of the trench so that the exact location of underground structures, both known and unknown, may be determined, and he shall be held responsible for the repair of such structures when broken or otherwise damaged because of carelessness on his part.

The actual location of existing utilities is the sole responsibility of the Contractor. Those shown on the plans are given to call particular attention to areas of special concern. Contractor shall contact one call (1-800-DIG-RITE), as well as individual utilities as necessary to insure all utilities are located in the field prior to construction.

2.4 SEPARATION OF WATER MAINS, SANITARY SEWERS AND STORM SEWERS

A. General

The following factors should be considered in providing adequate separation prior to trench excavation as required by Missouri Department of Natural Resources:

1. Materials and type of joints for water and sewer pipes.
2. Soil conditions.
3. Service and branch connections to the water main and sewer line.
4. Compensating variations in the horizontal and vertical separations.
5. Space for repair and alterations of water and sewer pipes.
6. Off-setting of pipes around manholes.

B. Parallel Installation

Water mains shall be laid at least 10 feet horizontally from any existing or proposed sewer. The distance shall be measured edge to edge. In cases where it is not practical to maintain a ten-foot separation, the District may allow deviation on a case-by-case basis, if supported by data from the design engineer. Such deviation may allow installation of the water main closer to a sewer, provided that the water main is laid in a separate trench or on an undisturbed earth shelf located on one side of the sewer and on either case, at such an elevation that the bottom of the water main is at least 18 inches above the top of the sewer. In areas where the recommended separations cannot be obtained, either the waterline or the sewer line shall be constructed of mechanical joint pipe or cased in a continuous casing.

C. Crossings

Water mains crossing sewers shall be laid to provide a minimum vertical clear distance of 18 inches between the outside of the water main and the outside of the sewer. This shall be the case where the water main is either above or below the sewer. At crossings, the full length of water pipe shall be located so both joints will be as far from the sewer as possible. Special structural support for the water and sewer pipes may be required. In areas where the recommended separations cannot be obtained, either the waterline or the sewer line shall be constructed of mechanical joint pipe or cased in a continuous casing no less than ten feet on both sides of the crossing.

D. Exception

The Department of Natural Resources must specifically approve any variance from the requirements of this Section, Subsections B and C, above, when it is impossible to obtain the specified separation distances.

E. Force Mains

There shall be at least a ten-foot horizontal separation between water mains and sanitary sewer force mains, and they shall be placed in separate trenches. There shall be an 18-inch vertical separation at crossings as required in this Section, Subsection C. In areas where these separations cannot be obtained, either the waterline or the sewer line shall be encased in a continuous joint-less pipe.

F. Sewer Manholes

No waterline shall be located closer than 10 feet to any part of a sewer manhole.

G. Disposal Facilities

No waterline shall be located closer than 25 feet to any on-site wastewater disposal facility, agricultural waste disposal facility, or landfill.

2.5 PIPE TRENCH EXCAVATION

A. Excavation Method

The Contractor shall use a backhoe or excavator to dig the trench. A trencher type excavation machine may be used as approved by the District. In yards with sod or turf type surfaces, the operator shall take special care and remove excavated materials without removing additional turf beyond the trench.

B. Depth of Pipe

Minimum depth of cover over pipe shall be forty-eight inches (48") as measured from the final ground level to the nearest surface of the pipe. Greater depths will be required to make smooth transitions at points of abrupt changes in the ground surface. Extra depths may be required under highways, railroads, and streams. These extra depth conditions will conform to the requirements as shown on the drawings, and as required by other agencies involved.

C. Trench Width

The width of the trench shall be ample to permit the pipe to be laid and jointed properly, and the backfill to be placed and compacted as specified. Trenches shall be of such extra width, when required, as will permit the convenient placing of timber supports, sheeting and bracing and handling of fittings. Minimum trench widths are shown on the plans.

D. Shoring

Open cut trenches shall be sheeted and braced as required by any governing federal or state law, municipal ordinances, and as may be necessary to protect life, property, or the work. Where sheeting and bracing are used, the trench width shall be increased accordingly. Trenches shall be kept free from water and pipe shall not be laid in water or on soggy material.

Temporary support, adequate protection, and maintenance of all underground and surface structures, drains, sewers, and other obstructions encountered in the progress of the work shall be furnished by the Contractor at his expense and under the direction of his Engineer. Any structures that have been disturbed shall be restored upon completion of the work

E. Removal of Pavement

The Contractor shall remove pavement and road surfaces as a part of the trench excavation, and the amount removed shall depend upon the width of trench specified for the installation of the pipe and the width and length of the pavement area required to be removed for the installation of valves, specials, manholes, or other structures. The width of pavement removed along the normal trench for the installation of the pipe shall not exceed the width of the trench specified by more than 6" on each side of the trench. The width and lengths of the area of pavement removed for the installation of appurtenances shall be equivalent to those for the associated pipeline or 6" wider than the appurtenance (whichever is greater). Wherever, in the opinion of the District Inspector, existing conditions make it necessary or advisable to remove additional pavement, the Contractor shall remove it as directed by the District Inspector and shall receive extra compensation therefore, provided such additional work is not shown in the drawings or specified. The Contractor shall use such methods, such as drilling, chipping, or sawing as will assure the breaking of the pavement along straight lines. The face of the remaining pavement shall be approximately vertical.

F. Protection of Property

All excavated material shall be piled in a manner that will not endanger the work and that will avoid obstructing sidewalks and driveways. Hydrants under pressure, valve pit covers, valve boxes, curb stop boxes, fire and police call boxes, or other utility controls shall be left unobstructed and accessible until the work is completed. Roadway gutters shall be kept clear or other satisfactory provisions made for street drainage. Natural watercourses shall not be obstructed.

Trees, shrubbery, fences, poles, and all other property and surface structures shall be protected unless their removal is shown on the drawings or authorized by the District Inspector. When it is necessary to cut roots and tree branches, such cutting shall be done under the supervision and direction of the District Inspector.

G. Stream Crossing

When crossing watercourses greater than 15 feet in width, the following shall be provided per Missouri Department of Natural Resources:

1. Flowing Streams

a) Restrained joint pipe shall be used for open cut crossings and encased in a welded steel casing. Restrained joint pipe shall be used for bored crossings.

b) Valves shall be provided at both ends of water crossings so that the section can be isolated for testing or repair; the valves shall be easily accessible and should not be subject to flooding; a Water Sampling Station shall be installed at the valve closest to the supply source in an accessible location.

c) Water Sampling Stations shall have permanent taps on each side of the valve to allow insertion of a small meter to determine leakage and for sampling purposes.

d) The stream crossing pipe or casing shall extend at least 15 feet beyond the upper edge of the stream channel on each side of the stream.

2. Intermittent Flowing Streams

a) Restrained joint pipe shall be used for all stream crossings;

b) The pipe shall extend at least 15 feet beyond the upper edge of the stream channel on each side of the stream.

3. Culverts and Ditches

Waters lines under ditches, outflows of culverts, and other places which have or could exhibit severe cutting or erosion shall be encased as indicated in the drawings. Encasement shall be placed at such points as located on the drawings. The Engineer or District Inspector may require additional locations to be encased. Extra compensation will be allowed for such additional work.

H. Barricades, Guards, & Safety Provisions

To protect persons from injury and to avoid property damage, adequate barricades, construction signs, torches, red lanterns, and guards, as required shall be placed and maintained during the progress of the construction work and until it is safe for traffic to use the highway. All material piles, equipment, and pipe that may serve as obstructions to traffic shall be enclosed by fences or barricades and shall be protected by proper lights when the visibility is poor. Safety rules and regulations of local authorities shall be observed.

I. Maintenance of Traffic & Closing of Streets

The Contractor shall carry on the work in a manner that will cause the least interruption in traffic and may close to through travel not more than two consecutive blocks, including the cross street intersected. The Contractor shall provide suitable bridging over the trench where traffic must cross open trenches.

The Contractor shall post suitable signs indicating that a street is closed and necessary detour signs for the proper maintenance of traffic. All signage will meet the Manual of Uniform Traffic Control Devices (MUTCD). Adequate signage will be required in the Work Zone.

2.6 BEDDING

A. General

The bedding material shall be placed in the bottom of the trench prior to placement of the pipe. The bedding below the pipe shall provide continuous and uniform bearing for the pipe except at the bell or joints at which a hole shall be dug to prevent the end from bearing. From the bottom of the trench to a depth of one foot above the top of the pipe, the trench bedding shall be placed around the pipe by shovel slicing or other means so that voids are eliminated. Bedding material around the pipe shall be thoroughly tamped to provide uniform and continuous bearing. The material shall be consolidated to 90% Standard Proctor. The Contractor shall use special care in placing bedding material to avoid damage or movement of the pipe. Frozen material will not be allowed for bedding.

B. Poor Soil

Where the bottom of the trench at subgrade is found to be unstable or to include ashes, cinders, refuse, vegetable or other organic material, or large pieces or fragments of inorganic material that will not provide adequate long term support, the Contractor shall excavate any such unsuitable material. Replaced material in the overdig area shall be thoroughly compacted with acceptable earth excavation or granular material, as approved by the District Inspector.

C. Rock

Rock ½ inch or larger shall be not be used in the bedding.

2.7 BACKFILLING

A. General

Backfill material shall be placed above the pipe bedding to the top of the trench with excavated material. The backfill shall be neatly rounded over the trench to a sufficient height to allow for settlement to grade after consolidation to make the earth surface conform as nearly as possible to the original condition. Backfilling material shall be deposited in the trench for its full width on each side of the pipe, fittings, and appurtenances simultaneously. Backfilling by machine methods will be allowed, if overseen by laborers to watch for rock, improper backfill material, and damage to pipe.

The replacement of backfill material into the trench shall be accomplished by running equipment parallel to the trench. The process of running equipment perpendicular to the trench to push backfill into the trench is prohibited.

Laborers following behind the backfill operation shall be using a shovel to remove remaining small amounts of earth from turf so that the work areas (not the trench area) will be restored to their original condition the day the excavation occurs.

The Contractor may backfill with excavated material where backfill material is not indicated on the drawings or specified. If excavated material is unsuitable for backfill as determined by the District Inspector, the Contractor shall provide approved material to backfill the trench.

If the excavated material consists of sand or loam or clay which has been excavated in a manner to eliminate lumps or clods (e.g. excavation by a trenching machine), the trench may be backfilled by means of a road grader or similar device, which will gently roll the material into the trench by multiple passes parallel to the trench.

Where additional trench settlement occurs, refilling shall be required to bring the surface to conform to the adjacent ground.

B. Backfill under Permanent Pavement

Where the excavation is made through permanent pavements, curbs, driveways, or sidewalks, or where such pavements are undercut, the entire trench shall be backfilled to the subgrade of the pavement with sand or granular backfill material. Backfill shall be compacted to 90% of the maximum Standard Proctor for the material. Backfill in trench shall not exceed 8" lifts.

C. Backfill under Private Gravel Drives

Walks and driveways consisting of broken stone, gravel, slag, or cinders shall be backfilled and compacted with suitable excavated material. If excavated material is not suitable or as directed by the District Inspector, the trench shall be backfilled and compacted with 1" surface rock. The top 12" of backfill shall match the existing aggregate.

D. Backfilling around Structures

Compacted backfill will be required around valve boxes, fire hydrants and other items, which project to ground, surface to insure continuity of proper alignment.

E. Backfilling in Freezing Weather

Backfilling will not be allowed in freezing weather except as approved by the District Inspector. No fill shall be made where the material already in the trench is frozen, and in no instances shall frozen material be used in the backfill.

F. Excess Excavated Material

Excess excavated materials from trenches located in open fields shall be uniformly distributed within the construction limits. Excess excavated materials within streets, driveways, parkways, highways and roads not required for backfilling or grading shall be removed from the site.

3. PIPE, JOINTS AND FITTINGS

3.1 GENERAL

A. Each pipe shall be clearly marked indicating thickness class, net weight of pipe without lining, and name of manufacturer. The Certificate of Conformance shall in effect state the material is PVC 1120 and meets the requirements of ASTM D2241-65 or latest revision thereof.

B. The same type of joint shall be used throughout the project for a particular type of pipe, unless otherwise specified.

C. Pipe shall be installed according to the manufacturer's recommendations and these specifications.

3.2 REFERENCES

Gray Iron Castings for Valves, Flanges and Pipe Fittings	ANSI/ASTM A126
Rigid Poly Vinyl Chloride (PVC) Compounds	ANSI/ASTM D1784
Solvent Cements for Poly Vinyl Chloride (PVC) Plastic Pipe and Fittings	ANSI/ASTM D2564
Ductile Iron and Gray-Iron fittings	ANSI/AWWA C110
Elastomeric Seals (gaskets) for Joining Plastic Pipe	ASTM F477, D3139
Polyvinyl Chloride (PVC) Pressure Pipe	ANSI/AWWA C900, C905
Standard for Molecular Oriented Polyvinyl Chloride	AWWA C909
Practice for Making Solvent-Cemented Joints with Poly-Vinyl Chloride (PVC) Pipe and Fittings	ASTM D2855

3.3 PIPE

A. Ductile Iron Pipe	ANSI/AWWA C150/A21.50; C151/A21.51; C115/A21.15 Class 50, except as otherwise specified; cement lined and sealed meeting ANSI/AWWA C104/A21.4.
B. PVC Pipe	ASTM 2241 IPS pressure rated pipe, AWWA C900, AWWA 905, AWWA 909, Schedule 40 & 80 meeting ASTM D 1785 NSF Standard 14 and CSA Standard B137.3
C. PVC Restrained Joint Pipe	ASTM D2241, C900RJ, or C905RJ
Integral Bell	Machining matching grooves in the pipe and coupling or bell with a nylon spline inserted into the groove. Couplings may be used, only as approved by the District Inspector.
D. Polyethylene Service Pipe	ASTM D2239 and PE 3408, SIDR-7 pressure rated for 200 psi
Service Line Size	3/4" size short side connection to meter 1" size under roadways to meter 2" size under roadways to double meters
E. Copper Pipe	ASTM B88 "Type K" with no splice under pavement.
Coupling	

Copper to Copper	Ford pack joint
PE to Copper	Ford pack joint with stainless steel insert
PVC to Copper	Schedule 80 PVC Nipple 12 inches long inserted into the pack joint and the other end is coupled with a standard PVC rubber ring coupling.

F. Brass Pipe — ASTM B43 for red brass pipe

3.4 CASING PIPE

PVC Pipe

8 inch through 15 inch	SDR 26 per ASTM D3034, or ASTM 2241
18 inch through 27 inch	ASTM F789 PS 115, or equivalent pipe stiffness.
Joint	Bell and spigot meeting ASTM D3212 if open cut construction, or restrained joint pipe if bored.
Rubber Gasket	ASTM F477. Solvent weld or non-gasket friction joints are not acceptable.

Steel Pipe

Yield Strength	35,000 psi conforming to ASTM A53-B
Thickness	As defined in the project requirements or authorizing permit agency
Length	Random lengths of pipe may be used, but all ends must be V grooved-butt welded around the complete perimeter to adjacent pipe.
Welds	Water tight and equal to or stronger than pipe

HDPE Pipe	PE 3608/4710 DR 11 High Density Polyethylene meeting ASTM F 714, AWWA C906
Size	DIPS or IPS are acceptable based on the required clearance of the casing spacer, carrier pipe size and required minimum clearance as defined in this specification section.
Joint	ASTM D 3261 Heat Fusion in conformance to PPI-TR-2. Remove excess material (burrs) on outside of pipe. Remove inside burrs.

Fusible PVC Pipe	Fusible pipe to meet AWWA C900 and AWWA C905 based on pipe size
Pipe	ASTM 2241 or ASTM D1785, as applicable.
Size	As shown on the plans, or acceptable size based on the required clearance of the casing spacer, carrier pipe size and required minimum clearance as defined in this section.
Joint	Butt-fused heated joint, as required by manufacturer and in conformance to PPI-TR-2. Burst test of fused sections per

ASTM D1599. Remove excess material (burrs) on inside of pipe.

3.5 PIPE JOINTS

A. General

The coupling-joint system shall have been tested and approved by the National Sanitation Foundation and certification of said approval shall be submitted.

Pipe ends shall be clean and smooth. Pipe lengths shall be such that a space is left between pipe ends of not less than ¼ inch or more than 1 inch. Pipe shall have a ring painted around the spigot end in such a manner as to allow field checking of setting depth of pipe in socket.

If manufacturer's design is such that excessive homing of pipe is detrimental, then two rings shall be required to meet tolerances. Contractor shall back pipe up to maintain position required.

The manufacturer shall furnish drawings of the joint and gasket. The dimensions of the bell, socket, and plain end shall be in accordance with the manufacturer's standard design dimensions and tolerances. Such dimensions shall be gauged at sufficiently frequent intervals to assure dimensional control and satisfactory joint assembly.

No contaminated material or any material capable of supporting prolific growth of microorganisms shall be used for sealing joints. Packing material shall be handled in such a manner as to avoid contamination. Packing materials must conform to AWWA Standards.

B. PVC Pipe Joints

Push-on Joint	ASTM Spec D3139. Bell end shall have tapered socket to create an interference type fit, as defined in ASTM D2672
Gasket	Elastomeric Seals meeting ASTM F-477

C. Ductile Iron Pipe Joints

Mechanical Joint	ANSI/AWWA C111/A21.11. Mechanical joint ductile iron fittings shall be used for all pipe sizes greater than 2-inch. Oversize (transition) gasket for use in ductile iron fittings will be acceptable
Push-on Joint	ANSI/AWWA C111/A21.11, except gaskets shall be neoprene or other synthetic rubber. Natural rubber will not be acceptable.
Restrained Push-On Joint	Pipe with restrained push-on joint shall be capable of being deflected to 4° after assembly for pipes 12" in diameter and smaller. US Pipe TR Flex, Griffin Snap-Lok or approved equal.
Flange	ANSI/AWWA C110/A21.10, C115/A21.15, ANSI B16.1, B16.5
Steel Flange	U.S. Pipe "Flange-Type" ASTM C207
Bolt	ASTM A307 chamfered or rounded ends projecting ¼ to ½ inch beyond outer face of nut.
Nut	ASTM A307 hexagonal, ANSI B18.2, heavy semi-finished pattern

Gasket	ANSI/AWWA C111/A 21.11 and ASTM D1330, Grade I, red rubber, ring type, 1/8 inch thick; or U.S. Pipe "Flange-Tyte" 1/8 inch thick.
Packing Material	Yarning or packing material shall consist of molded or tubular rubber rings.

D. Uni-Flange Pipe Restraint

PVC Pipe Barrel	Ford Meter Box Co., Series UFRCS 1300
PVC Pipe Bell Joints	Ford Meter Box Co., Series UFRCS 1390

E. Ductile Iron Lugs — ASTM A 536 for ¾" rods.

3.6 FITTINGS

A. Ductile Iron Fittings

General	ANSI/AWWA C110/A21.10, and to be compact type meeting ANSI/AWWA C153/A 21.53; 350 psi rated
	Cement lined and sealed meeting ANSI/AWWA C104/A21.4, and bituminous coating for outside pipe per manufacturer's standard.
Sleeves/Adapters	
DI to DI	Mechanical joint solid sleeve
DI to Steel or galvanized	Mechanical joint solid sleeve with sleeve size changed to accommodate pipe OD.
DI to IPS	Mechanical joint solid sleeve with PVC transition gasket.
IPS to Steel	Mechanical joint solid sleeve
AC to IPS	Hymax 2000 as manufactured by Total Pipe Solutions, Inc.
Anchor Coupling (Swivel Gland)	Fast Fabricators, Inc., or equal. Used with tees and solid adapters.
Tapped Fitting	Threaded, tapered. Used on tees and plugs.

B. Brass Fittings — Ford Brass Fittings meeting ASTM B-62

Polyethylene To Brass	Ford Fitting - stab type compression fitting with Reverse Taper

C. Plastic Fittings

PR 200 (< 4" size)	ASTM D 3139 NSF approved and marked, and used only with Water District approval.
Schedule 40 & 80	ASTM D1784
Solvent Weld	ASTM D2467
Threaded End	ASTM D2464
Gasket Bell	ASTM D3139

D. Tapping Saddle

To Ductile Iron Pipe	Ductile iron with stainless steel wrap-around and rubber sealing gasket; 250 psi pressure rating
To Ductile Iron Pipe	

with Corp Stop	Ford Ductile Iron Saddle F202
To PVC Pipe	Ford Brass Saddle S71 for all sizes
To PE Pipe	Ford Brass Saddle S41

E. Tapping Sleeve

Material	Type 304 Stainless Steel
MJ outlet	One-piece casting having a plain end and a mechanical joint gland TIG and MIG welded a full 360 degrees; Type 304 Stainless Steel Flange.
Gasket	Mechanical Joint Outlet Gasket, Branch Sealing Gasket, and Complete Circle Gasket attached to the sleeve at the factory.
Drop-In Bolt	Square Neck Track-Head bolts with a minimum of two (2) longer starter bolts. Minimum quantity of drop-in bolts and mechanical joint outlet bolts per outlet diameter shown below.

Outlet Diameter (inch)	Drop-In Bolts (Quantity)	MJ Outlet Bolts (Quantity)
2	8	2
3	8	4
4	10	4
6	10	6
8	16	6
10 - 12	20	8
14 - 16	36	12

F. Polyethylene Wrap

Material	8-mil thick Class C (Black) conform to ANSI/AWWA C105
Adhesive Tape	2 inches wide and plastic backed, capable of bonding securely to metal surfaces and/or polyethylene material.

4. VALVES, STRUCTURES and APPURTENANCES

4.1 VALVES

Gate Valve	Encapsulated Wedge non-rising stem; triple "0" Ring Seal and conforming to AWWA Specification C509.
Joint	Mechanical joint with 200 psi design working pressure and have resilient seats.
Operator	2" square operating nut opening counter clockwise.
Coatings	Protective epoxy interior coating according to AWWA C550.
Setting	Set vertical and in true alignment where shown on plans and construction details
Butterfly Valve	Mechanical joint Rubber-Seated Butterfly Valves M & H style 450 & 4500 conforming to AWWA C504, or equal.
Operator	Horizontal hex shaft, underground operator with 2" nut; closure turns similar to like size gate valve

Coatings	Protective epoxy interior coating according to AWWA C550.
Ball Valve	Ford B-87, Ford B11 and Ford B-81 with C87 pack joint, or equal.
Body	There shall be top and port O ring seals, and top anti-friction washer and bottom low friction plastic bearing insert with screwed ends
Operator	Tee head with removable plug for in-line repair.
Optional Body	Bronze body with Tee head, double O ring stem seals, molded Bura N rubber port seals and ball seats, full round opening ball with screwed ends.
Corporation Stop	Ford F1100 meeting AWWA Specification C800-55. Corporation stops for service lines shall be size 3/4" x 3/4", unless otherwise specified.

4.2 VALVE BOX

Riser Pipe	6" PR 200 PVC
Cover	Clay and Bailey No. 2194 cover and ring

4.3 DETECTOR CHECK VALVE

A Watts Series SS07F detector check valve with by-pass meter shall be installed on private fire protection and automatic sprinkler systems, and installed in a structure as shown in the details. Valve and line size will be determined by the District.

4.4 FIRE HYDRANT

Fire hydrants shall be American Darling B-84-B-5, Clow Medallion, or Mueller Centurion No. 250. Hydrant shall be self-draining, non-rising stem, nozzle threads meeting National American Standard Fire Hose Specs with caps and no chains.

Fire hydrants shall be factory applied red paint, have operating threads that are sealed and lubricated, the 1½" pentagonal operating nut shall open counterclockwise.

Hydrants shall be set for standard pipe burial depth unless shown otherwise on the plans. The hydrant gate valve and barrel shall be vertical and plumb.

4.5 AUTOMATIC FLUSHING UNIT

Automatic flushing unit shall be Kupferle 9400-A or approved equal, and shall be constructed and meet the requirements as shown in the construction details.

4.6 CLEANOUT

Cleanouts shall be constructed as shown in the details. All cleanouts shall be connected to a gate or ball valve; have proper thrust blocking, be self-draining with weep hole and rock; the riser shall be set plumb and left approximately 2' above ground, where practical.

Temporary cleanouts for testing shall be constructed of the material and size of the new water line for purposes of pigging the line. Once completed the cleanout piping will be removed.

4.7 AIR RELEASE VALVE

Air release valves shall be installed in pits as shown on the plans. The air release valve shall be a combination air valve Model D-040 as manufactured by A.R.I., Model 202 as manufactured by Val-Matic or approved equal.

4.8 WATER SAMPLING STATION

Water sampling station shall be as manufactured by Kupferle or approved equal, which meets the following requirements.

Housing	HDPE meeting ASTM D1248 set 4" above grade;
Ultra-Violet Resistance	7-9 yrs meeting ASTM G-26-92
Cover	Lockable
Color	Neutral earth tone or green
Flammability	1.59 cm/min meeting ASTM D635
Sampling/Flow Meter	3/4" brass threaded hose nozzle outlet with iron spigot handle.
Port	All working parts to be brass; removable from above ground.
Above Ground Piping	Brass
Below Ground Piping	48" burial depth of sampling pipe. Sampling pipe to be inside brass frost jacket. Above ground draining system for sampling pipe to prevent freezing.
Connection to Main	¾" Ford F1100 Corp Stop connection to Main ¾" PE service line from main to sampling pipe

4.9 SERVICE METER & PIT

Pit Setter	Ford Plastic PFBHC-248-18-28 for ¾" service (short-set) Ford Plastic PFBHC-288-18-28 for 1" service (road crossings)
Dimensions	18" inside diameter, 30" pit depth
Lid	Ford 2380-01-1012
Ring	Ford 2210-01-6050
Meter	Neptune Model T10 AMR

5. INSTALLATION

5.1 PIPES, FITTINGS, AND STRUCTURES

Pipe shall be of sizes indicated on the drawings and laid to the lines indicated thereon, in accordance with these specifications

Pipe interiors shall be thoroughly cleaned of all foreign matter before lowering into trench.

All pipe, fittings, valves, hydrants, and accessories shall be carefully lowered into the trench with suitable equipment in a manner that will prevent damage to pipe and fittings. Under no circumstances shall pipe or accessories be dropped or dumped into the trench.

All ductile iron materials shall be wrapped in a polyethylene encasement.

A. Pipe Placement

Each section of pipe shall rest upon the pipe bedding for its full length with recesses excavated at joints. Bell holes for pipe 8 inches and larger shall be excavated by hand. Any length that has had its line, grade or joint disturbed after laying shall be taken up and relayed. Under no circumstances shall pipe be laid in water nor when trenches or weather conditions are unsuitable for such work, unless otherwise directed by the District Inspector. Any section of pipe already laid but found damaged or

defective shall be replaced with new pipe at no additional expense to the Owner. Any pipe that has floated shall be re-laid, or as directed by the District Inspector.

Pipe shall be cut square by the aid of miter box, when field cutting pipe. The cut end which will be inserted into a socket shall be beveled with a milled curved-tooth flat file or other approved device. A factory pipe end shall be used as a guide to determine the bevel. Mark a stop guide on the pipe by use of a pencil or crayon to provide visual observation for proper insertion depth.

A rubber gasket shall be placed in the annular recess of the pipe or fitting socket with a lubricant that is water-soluble, non-toxic, non-objectionable in taste and odor, non-supportive of bacteria growth, and have no deterioration effect on the PVC or rubber gaskets. Lubricant containers shall be labeled with the trade name or trademark of lubricant manufacturer or pipe manufacturer. The lubricant shall be suitable for use in potable water. It shall be delivered to the job in enclosed containers and shall be kept clean.

The plain end adjoining pipe shall be thrust into the pipe socket, compressing the gasket uniformly around the pipe to form a positive seal. The gasket and the annular recess shall be so designed and shaped that the gasket is locked in place against displacement as the joint is assembled. Details of the joint design and assembly shall be in accordance with the joint manufacturer's standard practice.

Pipe may be furnished with a socket as an integral part of each piece of pipe or a coupling type socket with rubber gasket on each side may be provided. Ends of pipe intended to be inserted into a socket shall be factory beveled.

Pipe shall be kept clean after placement in the trench. Precautions shall be taken to protect pipe interiors, fittings, and valves against contamination. Pipe delivered for construction shall be strung so as to minimize entrance of foreign material. When pipe laying is not in progress, as, for example, at the close of the day's work, all openings in the pipeline shall be closed by water tight-plugs. Joints of all pipe in the trench shall be completed before work is stopped. Enough backfill shall be placed over the pipe to prevent flotation. If water accumulates in the trench, the plugs shall remain in place until the trench is dry.

Dirt entering the pipe that will not be removed by the flushing operation, as deemed by the District Inspector, shall be cleaned and swabbed with a 5 per cent hypochlorite disinfection solution, as necessary.

B. Pipe Joint Deflections

Maximum angular joint deflection is shown in the table. Fittings are required if the pipe deflection is exceeded.

Maximum Allowable Bending Radius and Joint Deflection for PVC Pipe

Pipe Type	Pipe Size (in)	Minimum Laying Radius (foot)	Offset per 20 ft Section of Pipe (Inch)
ASTM 2241	2	50	47
	3	75	32
	4	95	25
	6	140	17
	8	180	13
	10	225	11
	12	270	9
	16	355	7
AWWA C900/C905	4	125	19
	6	180	13
	8	235	10
	10	290	8
	12	345	7

Maximum Allowable Bending Radius and Joint Deflection for PVC Pipe

Pipe Type	Pipe Size (in)	Minimum Laying Radius (foot)	Offset per 20 ft Section of Pipe (Inch)
	16	452	5

The following table shall be used in determining the minimum radii for restrained joint pipe used in open cut and directional boring installations.

Maximum Allowable Bending Radius and Joint Deflection for PVC Restrained Pipe

Pipe Type	Pipe Size	Minimum Laying Radius (foot)	% Change in Pitch per 10'
All PVC and Fusible PVC	2	75	7.6
	3	100	5.7
	4	125	4.6
	6	200	2.9
	8	250	2.3
	10	300	1.9
	12	375	1.5
	16	500	1.1
	18	550	1.0
	20	625	0.9
	24	650	0.88

The minimum bending radii for HDPE pipe is based on the dimension ratio (DR) as follows:

Minimum Bend Ratio for HDPE Pipe

Dimension Ratio (DR)	Bend Ratio (α)
9	20
11	25
13.5	25
17	27
21	27
26	34

Minimum Radius = α times Pipe OD in feet

5.2 POLYETHYLENE WRAP (POLYWRAP)

Ductile iron pipe, fittings, valves, valve boxes and appurtenances shall be encased in 8-mil thick polyethylene according to ANSI/AWWA C105/A21.5. Although the polyethylene encasement should prevent contact between the pipe and surrounding backfill and bedding material, it is not intended to be completely airtight or watertight.

All lumps of clay, mud, cinders, or other materials that might be on the pipe surface should be removed prior to installation of the polyethylene encasement. Care should be taken to prevent soil or bedding material from becoming trapped between the pipe and the polyethylene.

The polyethylene film should be fitted to the contour of the pipe to affect a snug, but not tight, encasement with minimum space between the polyethylene and the pipe. Sufficient slack should be provided in contouring to prevent stretching the polyethylene when bridging irregular surfaces, such as bell-spigot interfaces, bolted joints, or fittings, and to prevent damage to the polyethylene during

backfilling operations. Overlaps and ends should be secured with polyethylene-compatible adhesive tape, tape at least every 4 feet.

For installation below the water table, both ends of the polyethylene tube shall be sealed as thoroughly as possible by wrapping circumferentially with adhesive tape or strapping at each joint overlap.

5.3 LOCATOR WIRE

Wire	Kris-Tech Wire PE-45 #12, or approved equal solid blue wire.
Splices/Connections	Kris-Tech Splice Kit 3M-DBR-Part Number – 054007-09964.

Locator wire shall be in at least 1,500-foot rolls and installed in such a manner to keep splices to a minimum. Rolls of 500 feet are only acceptable on jobs of less than 500 feet in length. Splices shall ONLY be made in valve boxes or locator wire splicing boxes.

Locator wire shall be taped to the top of all pipe installed including service lines. Locator wire at valve boxes shall be taped to the outside of the riser pipe; a hole or slot cut into the riser pipe to bring the wire into the pipe; and, enough wire spooled in the valve box to extend 24" outside the valve box.

Locator wire installation and signal loss shall be included under the 1-year pipe and workmanship warranty.

5.4 TAPPING SLEEVES

The branch opening shall be larger in diameter than nominal to allow the use of a full-size cutter. All welding shall be passivated to return the welded stainless steel to its original corrosion resistant state. There shall be no paper or plastic adhesive labels attached to the tapping sleeve, any information appearing on the sleeve shall be stenciled. The tapping sleeve shall be factory hydrostatically tested on pipe to verify proper fit and weld integrity with zero leakage allowed. The tapping sleeve shall be air tested to 50 psi prior to making the tap.

5.5 TAPPING SADDLES

If tapping saddles are installed on pipe containing polywrap, first place 3 wraps of polyethylene adhesive tape around pipe and then tap through tape and poly film. Repair any damage to wrap with tape and extra film as per ANSI/AWWA C105/A21.5. Remove material where saddle gasket touches pipe adjacent to hole.

After tap has been made, wrap & tape service line to 3 feet from main line and encase saddle with wrap & tape to 1 foot each sidesaddle on main line. Protect saddle & service line in this fashion regardless of whether main line has been encased with polywrap. Use sintered teflon pipe dope or TFE tape on all screw threads. Any saddle placed on ductile iron pipe shall be poly wrapped and taped to 1 foot each side of saddle.

When using a 2" Ford Ball Corp with pack joint on outlet, use sintered teflon pipe dope or TFE tape on all screw threads from main line.

5.6 TIEBACK RODS

A. General

Tieback rods are required wherever the continuity of restraint has been made discontinuous by use of a coupling. Tieback rods shall be used to hold assemblies together, such as at a tee which has a valve located on one or various sides, and at other locations where pipe restraint is required to prohibit movement.

Tieback rods shall be stainless steel all-thread 3/4" diameter rods with stainless steel 1-1/4" outside heavy hex nuts on both sides of fittings, bolt holes, etc. Use of more or larger tiebacks will be indicated on plans, if required. The number of rods is dependent upon the pipe size and the normal operating water pressure in the line.

The Water District will determine the normal operating water pressure. Operating pressure is normally less than 160 psi.

Number of Tie-back Rods
vs. Pipe Size

Pipe Size	Operating Pressure ≤160 psi	>160 psi
4" & Smaller	2	2
6" - 8"	4	6
10" - 14"	6	8
16" - 18"	8	10
20" - 24"	12	16

B. Installation

The rods shall be run through the bolt holes in fittings, valves, etc. Both sides of all flanges shall be bolted. Double nuts are required for pipe sizes that are 8" and larger, or require more than 4 rods. Where possible, use an Anchor Style Fitting on one end when a group of fittings occurs at one location.

Ductile iron lugs may be used for assemblies up to and including 8" pipe size.

Rods may be slightly bowed to traverse around the body of some devices. Rods may be added which hook into said holes so that rods may remain straight. Anchor straps, socket clamp assemblies, etc. may be used by the contractor in his normal procedures.

When installing tieback rods with concrete reaction blocks adjust nuts after concrete has set.

C. Exceptions

1. In cases where tieback rods require lengths greater than 4', uni-flange pipe restraints may be used, as directed by the District Inspector.

2. When piping is mounted on prefabricated skids, connection of piping to skids may be used in lieu of tieback rods.

5.7 CONCRETE THRUST BLOCKING

Concrete thrust blocking shall be used at all bends, tees, end caps, and at other locations requiring pipe restraints. Thrust blocks must be placed against undisturbed earth.

Thrust blocks shall be constructed of 3,000 psi commercial redi-mix concrete with a slump no greater than 6-inch.

Prior to pouring concrete, polyethylene wrap shall be placed around valves, fittings, bolts and all-thread rods to keep concrete separated from pipe and fittings. Duct tape to hold plastic in place may be used. Water District to approve thrust blocking forms prior to placement of concrete.

A. Horizontal Thrust Blocks

The bearing area is the face dimension that is located against unexcavated earth on the back side of the trench. The height and width face dimensions shall be established in the field meeting the bearing area shown in the table in the plans. The centerline of the face dimensions shall be located at the centerline of the pipe in both the horizontal and vertical directions.

When fittings and valves have been connected by tieback rods to form one continuous unit, the entire aggregated system may be treated as one for the purpose of concrete thrust blocking. The contractor may reduce concrete reaction blocking requirements, as approved by the District Inspector.

B. Vertical Thrust Blocks

The concrete required to restrain vertical bends is shown in the table on the plans.

C. Concrete Restraining Blocks

Concrete restraining blocks, sometimes called a deadman or cross blocking, shall be anchored to a valve or fitting with the same size and number of tieback rods as defined for tieback rods.

D. Reinforcing Steel

Reinforcing steel bars	ASTM A 615 or A 706 Grade 60 deformed billet steel
Welded Wire Reinforcement	ASTM A 185 and be furnished in sheets
Tie Wire	16 gauge minimum, soft annealed

6. PIPE BORING

6.1 GENERAL REQUIREMENTS

Borings shall meet all requirements set forth by the permit issued by the appropriate jurisdiction. Contractor shall obtain necessary permits and do all work in accordance with their requirements.

6.2 CASING AND SPACER DATA

The Contractor shall submit shop drawings for the casing pipe and spacers. The spacer shall be sized to ensure that the bell of the carrier pipe does not touch the casing. The casing shall have at least a 1-1/2" clearance between the outside diameter of pipe with the casing spacer attached and the casing pipe. Contractor's supplier shall show compatibility of casing size with spacer design.

SPACER DATA		
Pipe Size	Max. Skid Spacing	Spacer Width
(inch)	(feet)	(inch)
4	4½	6
6	6	6
8	7	8
10	8½	8
12	9½	8
16	10	8

A. Spacer Materials

Totally non-metallic constructed of preformed sections of high-density polyethylene. Spacers shall be ISO 9002 certified for strength and quality. RACI casing spacers are the only approved brand.

B. End Seal

1/8" synthetic rubber wrap around with ½" stainless steel banding straps. Advanced Products Model AW has been approved.

C. Lubrication

Flux soap or drilling mud.

D. Installation

Casing spacers shall have a minimum number of projections around the circumference totaling the number of diameter inches.

Casing spacers shall be fastened tightly to the carrier pipe so that the spacers do not move during installation with double backed tape. Tool recommended for installation by the manufacturer shall be used during installation. Lubricate the spacers at time of installation.

6.3 CASING INSTALLATION

Casings may be installed by boring or open cut methods as is required. Casing shall be installed as boring equipment removes material from hole. Contractor may use larger casing size, but shall be responsible for any related modifications as a result.

Joining procedures must be such that concentricity of the entire completed casing will be maintained, and that the line and grade of the carrier pipe will be continuously straight. A full circle must be seen to prove that the casing is concentric from end to end by the lamping method of inspection.

The burial depth of the carrier pipe inside the casing shall be 48" below the lowest level of surface being crossed, except as specifically shown on the plans or defined by the governing jurisdiction. The casing may be lowered to avoid vertical bends.

The entire casing shall be installed and inspected before any pipe is inserted into the casing.

Contractor shall complete bore before other work is started so that slight misalignments in connecting pipes can be adjusted.

6.4 PVC CARRIER PIPE INSTALLATION IN CASING

1. All carrier pipes shall have restrained joints.
2. Pipe may be installed by using drawn cable or jacking. The force used to install the pipe must spread over the pipe end on which it bears, by use of a flat piece of wood or other similar force sustaining material.
3. No less than twenty foot long sections of pipe shall be used to minimize the number of joints within the casing.
4. It will be unnecessary to use restrained joint pipe if the casing is shorter than the carrier pipe. Also, the pipe may be laid directly on the casing without the use of spacers.
5. On 4" and larger pipes, a MJ sleeve, a fitting or valve shall be installed on either side of the casing.
6. On pipes smaller than 4", a PVC repair style coupling may be installed on either side of the casing, in lieu of a ductile iron sleeve.
7. Bores under roadways and creeks where encased or not shall have two separate strands of locator wire attached to the waterline that runs from isolation valves on either side of the bore as terminal points for the extra wire.

6.5 DIRECTIONAL BORING

A. General Requirements

Directional bores shall be completed using a directional boring machine supplied with an output signal to allow the Contractor to track the location of the drill head at all times. Size of drilling equipment shall be adequate for the job, but not grossly oversized such that an undue amount of thrust or torque is placed on the carrier pipe. Drilling fluids shall be selected for the site specific soil and ground water conditions. Confine free flowing (escaping) slurry or drilling fluids at the ground surface during pullback or drilling to prevent damage or hazardous conditions in surrounding areas. Remove all residual slurry from the surface and restore the site to pre-construction conditions. Fully repair any and all bore/relief pits constructed, including vacuuming drilling fluids and compacting disturbed earth.

All pipelines provided in the restrained joint area shall be installed to a minimum depth of 6 feet under creeks and 10 feet under river crossings, unless shown otherwise on the plans. All work associated with installing restrained joint pipe in the designated areas and, if crossing wetlands, creeks, rivers, streams or other waterways, shall conform to all permit requirements and to State and federal regulations.

Restrained joint areas depicted on the drawings are not to be considered exact and represent the

general length of the restrained joint pipe. The actual length of the restrained joint area will be determined in the field by the District Inspector, and may differ from that shown on the drawings.

B. Execution

A pilot hole shall be bored first, with an angle of entry not to exceed 20% grade from the horizontal, and proceed under the obstacle being crossed while maintaining the required soil. The pilot hole shall extend to the point of exit no shallower than 8 feet from the surface on a grade not to exceed 20%, unless shown otherwise on the Plans. The carrier pipe shall be restrained joint PVC pipe, unless otherwise shown on the Plans.

The carrier pipe shall be assembled on the exit side of the bore, and installed by back reaming in the reverse direction. Deviations from this method shall be approved by the District Inspector. The pull section shall be adequately supported during pullback. Pipe should not drag on the ground. Above-ground pipe assembly shall be checked for suitability of installation before pullback. The borehole shall be reamed to approximately 1.2 times the outside diameter of the carrier pipe. Use sufficient drilling fluids and monitor pullback pressure to detect any problems before heaving of the bore path surface occurs. Maintain the minimum cover required as shown on the plans.

A swivel shall be used when back reaming to prevent rotational torque (torsion) on the carrier pipe. Carrier pipe to be capped as necessary to prevent drilling fluids from entering.

Provide long-body transition couplings and reducers as necessary to complete the connection to the adjoining pipe. The Contractor shall provide the required depth of cover over the pipe upon tying in the restrained joint pipe with the adjoining pipeline.

All bore/relief pits constructed including vacuuming drilling fluids shall be backfilled.

C. Installation Alignment Record Data

Trace bore path by interpretation of electronic signals sent by a monitoring device. If a District Inspector is present, identify the cutting head location after each push to confirm that the bore will meet the proper horizontal and vertical alignments.

In addition to the electronic locator of the drill head, the Contractor shall keep a record of the location after each rod push. Data shall include the following, as appropriate:

Rod	number
Length	foot
Depth	foot
Offset (L/R)	foot
Pitch	percent grade

Submit to the Engineer a print out of the bore path for accurately determining the boring profile and to exhibit that sufficient cover was achieved during the bore. The bore path printout must be submitted prior to final pay request

7. TESTING OF PIPELINE

7.1 FIELD INSPECTION

The Engineer may perform various tests at times that he deems necessary, including pressure tests with his own equipment. Joints may be cut out of the pipeline for inspection and testing. This does not imply that indiscriminate cutting of joints will be allowed. Pipe may be cut at such times to facilitate such tests and the Contractor shall perform such cuts and repairs as requested.

Pipes, fittings, valves, hydrants, and accessories shall be inspected for defects prior to placement into the trench. Any defective, damaged, or unsound material shall be repaired or shall be removed from the site.

7.2 WATER FOR TESTING

It is the Contractor's responsibility to provide the water for testing. With District approval, Contractor may tap an existing waterline with the proper tapping materials to obtain water at the site. Upon completion of the need for water, Contractor will remove all connecting pipe to the corporation stop and close the corporation stop fully.

7.3 LINE CLEANING

To insure that lines are clean prior to disinfection, a polyethylene pig swabbing device shall be run through the line. The pig shall be sized for the specific size of the pipe, and shall be provided by the Contractor. The Contractor may do the line cleaning in segments as suits his construction methodology. The pipe segments shall be subdivided to facilitate practical lengths of line cleaning, or as directed by the Water District.

Contractor shall install and remove all temporary connections and devices required to insert the pig, provide adequate water for flushing, and removal of the pig upon completion.

The cleaning of some lines may be waived if the District Inspector feels that the pipe installed is clean and free of foreign matter.

7.4 DISINFECTING NEW WATER MAINS

Disinfection of Water Mains shall be in accordance with the latest edition of AWWA C651.

A. Flushing Requirements

The main shall be flushed with potable water prior to disinfection until discolored water, mud, and debris are eliminated. The flushing velocity should be at least 2.5 ft/sec. The rate of flow required to produce this velocity in various diameters is shown in the table below. No site for flushing should be selected unless it has adequate drainage.

Pipe Size	Flow Required to Produce 2.5 fps Velocity
In.	gpm
4	100
6	220
8	390
10	610
12	880

B. Forms of Chlorine for Disinfection

1. Liquid Chlorine

   Inject with a solution feed chlorinator and a water booster pump. Use an experienced operator and follow the instructions of the chlorinator manufacturer.

2. Calcium Hypochlorite (Dry)

   Dissolve in water to a known concentration in a drum and pump into the pipeline at a metered rate.

3. Sodium Hypochlorite (Solution)

   Dilute in water to desired concentration and pump into the pipeline at a metered rate.

C. Disinfection by Continuous Feed Method of Chlorine Application

This method is suitable for general application. Water from the existing distribution system or other approved sources of supply shall be made to flow at a constant, measured rate into the pipeline. The

water shall receive a dose of chlorine, fed at a constant, measured rate. The two rates shall be proportioned so that the chlorine concentration in the water in the pipe is maintained at a minimum of 50 mg/L available chlorine.

To assure that a proper concentration is maintained, the chlorine residual should be measured at regular intervals in accordance with the procedures described in the current edition of "Standard Methods and AWWA M12-Simplified Procedures for Water Examination".

The amount of chlorine residual required for each 100 ft of pipe of various diameters is shown on the table below. Solutions of 1 per cent chlorine may be prepared with sodium hypochlorite or calcium hypochlorite. The latter solution requires approximately 1 lb of calcium hypochlorite in 8.5 gal of water.

Chlorine Required to Produce 50 mg/L
Concentration in 100 ft of Pipe

Pipe Size	100 percent Chlorine	1 percent Chlorine Solutions
(Inch)	(Lbs)	(Gal)
4	0.027	0.33
6	0.061	0.73
8	0.108	1.30
10	0.170	2.04
12	0.240	2.88

During the application of the chlorine, valves shall be manipulated to prevent the treatment dosage from flowing back into the line supplying the water. Chlorine application shall not cease until the entire main is filled with the chlorine solution. The chlorinated water shall be retained in the main for at least 24 hr, during which time all valves and hydrants in the section treated shall be operated in order to disinfect the appurtenances. At the end of this 24 hr period, the treated water shall contain no less than 25 mg/L chlorine throughout the length of the main.

D. Final Flushing

After the applicable retention period, the heavily chlorinated water shall be flushed from the main until the chlorine concentration in the water leaving the main is no higher than that generally prevailing in the system, or less than 1 mg/L. Chlorine residual determination shall be made to ascertain that the heavily chlorinated water has been removed from the pipeline. De-chlorination of heavily chlorinated water shall be completed in accordance with AWWA C651 with de-chlorinating chemicals.

E. Bacteriologic Testing

At least twenty-four (24) hours after final flushing, bacteriologic sample(s) shall be collected from the end of the line, or other points as required by the District Inspector, and tested for bacteriologic quality and shall show the absence of coliform organisms. The samples collected shall be delivered by Contractor to a certified laboratory within 24 hours of obtaining the samples.

If the number and frequency of samples is not prescribed by the public health authority having jurisdiction, at least one sample shall be collected from chlorinated supplies where chlorine residual is maintained throughout the new main. In the case of mains exceeding 3000 ft, it is desirable that samples be collected midway along the length of the line as well as at its end. If the initial disinfection fails to produce satisfactory samples, disinfection shall be repeated until satisfactory samples have been obtained. When the samples are satisfactory, the main may be placed in service.

Two consecutive passing tests are required to demonstrate successful disinfection. The Contractor shall re-chlorinate the pipeline segment that is being tested after three bacteriological tests have failed.

Contractor shall incur all costs of sampling and supplying the District with a copy of test results.

7.5 DISINFECTION AFTER CONNECTION/REPAIR TO EXISTING WATERLINES

The procedures outlined in this section apply primarily when mains are wholly or partially dewatered. Leaks or breaks that are repaired with clamping devices while the mains remain full of water under pressure present little danger of contamination and require no disinfection.

A. Trench Chlorination

When an old line is opened, either by accident or by design, the excavation will likely be wet and badly contaminated from nearby sewers. Liberal quantities of hypochlorite applied to open trench areas will lessen the danger from contamination.

B. Swabbing with Hypochlorite Solution

The interior of all pipe and fittings used in making the repair (particularly couplings and tapping sleeves) shall be swabbed with a 5 per cent hypochlorite solution before they are installed.

C. Slug Method for Chlorination

In addition to the procedures above, a section of main in which the break is located shall be isolated, all service connections shut off, and the section flushed. The pipeline will be chlorinated with a highly concentrated dosage as high as 500 mg/L with the contact time reduced to at least 30 minutes.

D. Flushing

Flushing shall be started as soon as the repairs are completed and continued until discolored water is eliminated. The line shall be flushed from both directions, as directed by the District Inspector.

E. Bacteriological Testing

Bacteriologic samples shall be taken at the end of the line in the direction of flow. If the direction of flow is unknown, samples shall be taken on each side of the main break.

7.6 LEAKAGE TESTING

A. Preparation of Waterline

Contractor shall perform a hydrostatic test of the new waterline. Prior to the test, Contractor shall verify that test section is fully isolated, and that all air has been expelled from the pipeline to the satisfaction of the District Inspector. This may be accomplished by means of air relief valves, blow-off valves, hydrants or other means. If required, taps shall be made at high points where air relief valves are not called for on the plans. Such taps shall be plugged after testing is complete. Corporation stops should be installed before this test, if possible.

B. Equipment

Contractor shall provide all necessary water, piping, pumps, gauges (face divisions of 2 psi or less) and fittings for testing.

C. Testing Pressure

Generally, the test pressures for PR 200 PVC and PR 250 PVC are 160 psi and 200 psi, respectively. District Inspector will verify lowest elevation within the section of piping to be tested, and determine the test pressure and the testing location. Apply a test pressure equal to the design pressure of the pipeline at the lowest point of the alignment. After the specified pressure has been reached, the pump shall be stopped and all pipe, fittings, valves, hydrants, joints, and appurtenances examined for leaks.

Any visible leaks shall be repaired. After visible leaks are repaired, the pipeline shall be refilled with water and re-pressurized to the design pressure of the pipeline. This pressure shall be maintained for a period of four hours.

D. Allowable Leakage

A container of water shall be attached to the distribution line in a manner to allow the water in the container to flow into the pressurized lines. Water loss in the container shall be measured after the test and acceptability of the line shall be based on the following formula for a leakage allowance of 10.5 gallons per inch diameter per mile per day:

$$L = \frac{NxDx\sqrt{P}}{74{,}000}$$

Where: L = Allowable Leakage in gallons per hour
N = Number of joints in line being tested
D = Nominal pipe diameter in inches
P = Average test pressure in psi

Allowable Leakage per 1000 ft in gal per hr				
Test Pressure (psi)	Pipe Size (inch)			
	4	6	8	12
150	0.34	0.50	0.65	0.95
160	0.35	0.51	0.67	0.99
170	0.36	0.53	0.69	1.02
180	0.37	0.54	0.71	1.05
200	0.39	0.57	0.75	1.10
220	0.41	0.60	0.78	1.16

8. SITE RESTORATION

8.1 CLEAN UP

Final cleaning up shall be completed as soon as practical. All surplus water main materials furnished by the Contractor and all tools and temporary structures shall be removed from the site by the Contractor. All dirt, rubbish, and excess earth from the excavation shall be hauled to a dump provided by the Contractor and the construction site left clean to the satisfaction of the Engineer or District Inspector. All surplus water main materials furnished by the Owner and delivered to the site by the Contractor shall be removed and delivered by the Contractor to a location designated by the Owner. All surplus water main material furnished and delivered by the Owner shall be removed by the Owner.

Brush and trees removed from right-of-way easement for water line installation shall be removed from property or burnt, unless in accordance with District Policy the landowner has given Water District a written request for brush to be piled and left for landowners use.

The District Inspector may require the Contractor to rework the cleanup immediately in areas where neglect is causing a nuisance. The Engineer or District Inspector shall be the sole judge of nuisance. Nuisance may result from a lack of improper workmanship at the time of pipe installation, or due to forces of nature after pipe has been installed. The notice shall be in writing and the re-cleanup shall be accomplished in 2 weeks from said notice. Cleanup, so notified to be done and remaining undone after 2 weeks may be hired done by others and the cost deducted from monies due the Contractor.

If any pavement, trees, shrubbery, fences, poles, or other property and surface structures have been damaged, removed, or disturbed by the Contractor, whether deliberately or through failure to carry out the requirements of the Contract Documents, state laws, municipal ordinances, or the specific direction of the Engineer or District Inspector, or through failure to employ usual and reasonable safeguards, such property and surface structures shall be replaced or repaired at the expense of the

Contractor. These damaged items shall be replaced, repaired or restored to a condition equal to that before the work began.

All completed lines shall be returned as nearly as possible to the original condition, including seeding or sodding, as necessary.

The Contractor shall restore all pavement, sidewalks, curbing, gutters, shrubbery, fences, poles, or other property and surface structures removed or disturbed as a part of the work to a condition equal to that before the work began, and shall furnish all incidental labor and materials. No permanent pavement shall be restored unless the condition of the backfill is such as to properly support the pavement, and until approved by the Engineer or District Inspector. There will be no extra compensation for this work unless identified in the pay items.

8.2 REVEGETATION

A. Grading and Base Preparation
Earthwork shall conform to the lines and grades as shown on the plans. Grading shall provide positive drainage and a neat appearance conforming to the surrounding area. The area shall be tilled by disking or harrowing and all clods, lumps, etc. broken to a size to allow future mowing. Broken concrete, rubble, stones, roots, debris or other unsuitable material shall be removed. All disturbed areas shall be finished with at least 2-inches of topsoil.

B. Fertilizer and Lime
Fertilizer shall be a standard commercial 12-12-12 product which, when applied at the proper rate, will supply the quantity of total nitrogen (N), available phosphoric acid (P_2O_5), and soluble potash (K_2O), as specified. Submittals shall be provided for approval on all fertilizer used on the project. Material may be accepted on the basis of bag label analysis or supplier's certification.

Fertilizer Application Rates:

Temporary seeding	400 pounds per acre.
Permanent Seeding:	
Lawn Area	200 pounds per acre
Non-Lawn Area	300 pounds per acre

Lime shall be applied in Non-Lawn areas at a rate of 50 pounds per 1,000 sq feet or as determined by a soil test.

C. Sodding
Lawns established in zoysia grass that are stripped of vegetation will be replaced with zoysia sod. Seeding will not be permitted.

D. Temporary Seeding
Temporary seeding is required within 30 days of the installation of the water line and backfilling. The following procedures shall be taken.

1. Remove foreign materials, plants, roots, stones, and debris from the disturbed area. Do not bury foreign material. Remove contaminated subsoil. Using suitable excavated material, mound backfill over the trench to allow for settlement.
2. Apply the following temporary grass seed mix at the specified rate

Spring Planting Season		Fall Planting Season	
Lawn Area	Rate		Rate
Oats or Rye *	60 lb/ac	Winter Wheat or Rye	60 lb/ac

Non-Lawn Area

Oats, Barley, Rye, Red Clover, or Creeping Fescue	60 lb/ac	Winter Wheat or Winter Rye	60 lb/ac

* Other quick growing grain seed may be approved for use.

3. Apply fertilizer three weeks after seeding.
4. Reseed areas within 30 days of initial seeding where no stand of grass has occurred.

E. Final Seeding
Contractor shall seed only when soil and climatic conditions are such as to insure plant growth. Submittals shall be provided for approval on all grass seeds used on the project. Seed shall meet all requirements of the Missouri Seed Law for 99% Pure 85% germination.

4. Till the seeding area at least 3 inches deep. Remove foreign materials, plants, roots, stones, and debris from the disturbed area. Add suitable material to areas that settled excessively.
5. Spread 2 inches of topsoil over the area. Rake until the surface is smooth and level with the surrounding ground
6. Apply fertilizer at least one week before seeding. Work the fertilizer into the topsoil.
7. Apply the following permanent grass seed mix at the specified rate.

Lawn Area	Rate	Non-Lawn Area	Rate
Falcon IV or Major	200 lb/ac	Bromegrass	30 lb/ac
Oats *	100 lb/ac	K-31 Fescue	200 lb/ac
		Winter Wheat	100 lb/ac

* Other quick growing seed may be approved for use.

The Contractor shall be responsible for the growth of the seeded area. Any portion of the seeded area that is not in good growing condition at the end of thirty (30) days shall be reseeded as specified above.

F. Mulch
Apply mulch over the seeded areas at a rate of 1 ton per acre. The vegetative mulch shall be cereal straw from stalks of oats, rye, wheat, or barley. The straw shall be free of prohibited weed seeds as stated in the Missouri Seed Law, and shall be relatively free of all other noxious and undesirable seeds. The straw shall be clean and bright, relatively free of foreign material, and be dry enough to spread properly.

All mulch shall be distributed evenly over the area to be mulched within 24 hours following the seeding operation. Following the mulching operation, precautions shall be taken to prohibit foot or vehicular traffic over the mulched area. Any mulch which is displaced shall be replaced at once, but only after the work preceding the mulching which may have been damaged as a result of the displacement has been acceptably repaired.

Mulch placed on embankments steeper than 2-1/2:1 will need to be tacked or punched in.

Mulch is intended to reduce erosion during rain events. In the event there is too little mulch or heavy rains occur, whereby the seeded area erodes resulting in rivulets and other irregularities of the ground surface, the area will be re-graded with added topsoil, re-fertilized, re-seeded, and re-mulched.

END OF SECTION

TYPICAL CONSTRUCTION DETAILS
TABLE OF CONTENTS

No.	Detail
1	Pipe Trenching
2	Thrust Blocking
3	Concrete Restraining Block
4	Tieback Rod & Hairpin Rebar
5	Locator Wire
6	Gate Valve
7	Fire Hydrant
8	2" Connection to Main
9	End Cleanouts
10	End Cleanout at Tee or Cross
11	Side Cleanouts
12	Auto Flush Unit
13	1" Service Line Roadway Crossing
14	2" Service Line Roadway Crossing
15	Waterline Installation at Cul-de-sac
16	Typical Roadway Crossings
17	Encasement Pipe Spacer
18	Air Release Pit
19	Detector Check Valve Manhole
20	Water Sampling Station
21	Typical Stream Crossing

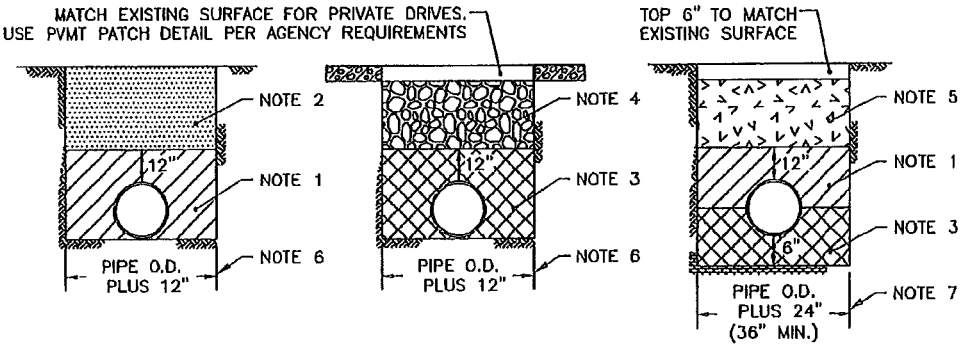

EARTH SECTION | ROAD CROSSING SECTION | ROCK SECTION

BEDDING AND BACKFILL NOTES:

1. SUITABLE EARTH EXCAVATED MATERIAL FREE FROM DEBRIS, MUCK, MUD BALLS, ROCK, AND HARD OBJECTS LARGER THAN 1" DIA. PIPE SHALL REST ON UNDISTURBED EARTH WITH CUTOUT FOR PIPE BELL.
2. SUITABLE EARTH EXCAVATED MATERIAL FREE FROM DEBRIS, MUCK, MUD BALLS, ROCK, AND HARD OBJECTS LARGER THAN 2" DIA.
3. WASTE ROCK 1/4" OR SMALLER.
4. FOR COUNTY ROAD USE 2.5" MINUS LIMESTONE ROCK. FOR OTHER ROADWAYS AND PRIVATE DRIVES USE 1" MINUS LIMESTONE ROCK, OR AS REQUIRED BY LOCAL JURISDICTION.
5. SUITABLE MIX OF EARTH EXCAVATED MATERIAL WITH NO MORE THAN 50% EXCAVATED ROCK NO LARGER THAN 4" SIZE.
6. ADDITIONAL TRENCH WIDTH AS REQUIRED TO INSTALL FITTINGS AND THRUST BLOCKS.
7. ADDITIONAL TRENCH WIDTH TO INSTALL FITTINGS AND THRUST BLOCKS TO BE PIPE O.D. PLUS 32" WITH A MINIMUM OF 42".

GENERAL NOTES:

1. BEDDING MATERIAL SHALL BE TAMPED IN LAYERS UNDER THE PIPE HAUNCHES AND AROUND THE PIPE TO TOP OF PIPE. TO PROVIDE A UNIFORM BEARING SURFACE.
2. ANY OVER EXCAVATION DUE TO REMOVAL OF UNSUITABLE MATERIAL IN THE BOTTOM OF THE TRENCH SHALL BE BACKFILLED WITH ACCEPTABLE MATERIAL AND COMPACTED.
3. COVER OVER THE PIPE SHALL BE 48" UNLESS OTHERWISE SHOWN ON THE PLANS.
4. LOCATOR WIRE, NOT SHOWN, SHALL BE INSTALLED ON ALL PIPE.
5. FOR ROCK SECTION, PROVIDE A 5' LONG EARTHEN DAM SECTION OF SUITABLE EARTH EXCAVATED MATERIAL FROM BOTTOM OF TRENCH TO TOP OF TRENCH A MINIMUM SPACING OF 100 FT, OR AS DIRECTED BY THE DISTRICT INSPECTOR.

CONSOLIDATED WATER

BARTLETT & WEST 1719 SOUTHRIDGE DR. JEFFERSON CITY, MO PHONE 573-634-3181	CPWSD NO. 1 OF BOONE COUNTY PIPE TRENCHING DETAIL	PROJ NO: 18080.000 DATE: FEB 2013	DETAIL NUMBER 1

Drawing Name: W:\Proj\18000\18090\18090.000\AutoCad\Standard Details\STANDARD DETAILS Feb 2013.dwg Layout Name: TRENCHING Plotted By: KASOOB13 Plotted on: 2/26/2013 10:59:02 AM

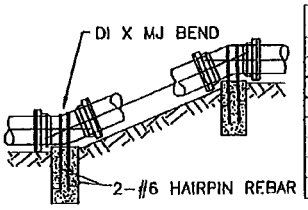

VERTICAL THRUST BLOCKS								
Pipe	Min. Volume of Concrete				Min. Bearing Area			
Size	11.25	22.5	45	90	11.25	22.5	45	90
(in)	(cy)	(cy)	(cy)	(cy)	(sf)	(sf)	(sf)	(sf)
4	0.2	0.4	0.7	1.0	0.0	0.1	0.6	2.0
6	0.4	0.8	1.5	2.1	0.1	0.3	1.2	4.2
8	0.7	1.4	2.6	3.6	0.1	0.5	2.1	7.2
10	1.1	2.1	3.9	5.5	0.2	0.8	3.3	11.1
12	1.5	3.0	5.5	7.7	0.3	1.2	4.6	15.7

VERTICAL BEND THRUST BLOCK DETAIL

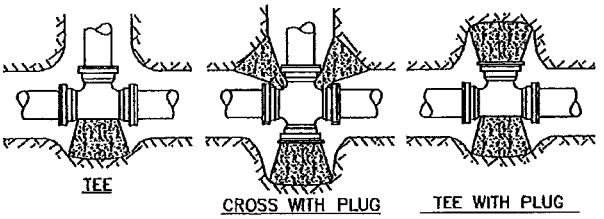

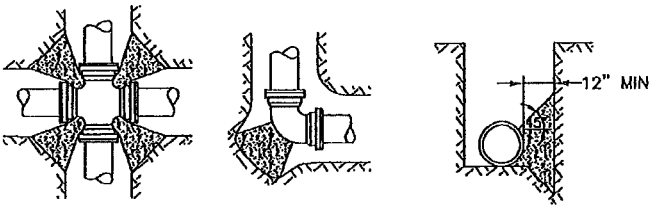

HORIZONTAL THRUST BLOCKS						
Pipe	Minimum Bearing Area					
Size	11.25	22.5	45	90	Tee/Plug	Cross*
(in)	(sf)	(sf)	(sf)	(sf)	(sf)	(sf)
4	0.4	0.8	1.5	2.8	2.0	1.0
6	0.8	1.7	3.2	6.0	4.2	2.1
8	1.4	2.8	5.5	10.1	7.2	3.6
10	2.2	4.4	8.5	15.8	11.1	5.6
12	3.1	6.1	12.0	22.2	15.7	7.8
14	3.7	7.4	14.5	26.7	18.9	9.5
16	4.8	9.6	18.9	34.9	24.7	12.3

* Use at each corner

HORIZONTAL BEND THRUST BLOCK DETAIL

1. THRUST BLOCKS SHALL BE FORMED AND POURED AGAINST UNDISTURBED SOIL. KEEP "T" BOLTS CLEAR OF CONCRETE, WRAPPED IN 8 MIL VINYL PLASTIC PROTECTOR.
2. THICKNESS BETWEEN FITTING AND SOIL SHALL BE A MINIMUM OF 12".
3. CONCRETE SHALL HAVE 3000 PSI MINIMUM COMPRESSIVE STRENGTH.
4. PLUGS SHALL BE WRAPPED WITH 8 MIL VISQUEEN.

BARTLETT & WEST
1719 SOUTHRIDGE DR.
JEFFERSON CITY, MO
PHONE 573-634-3181

CPWSD NO. 1 OF BOONE COUNTY
THRUST BLOCKING DETAIL

PROJ NO: 18080.000
DATE: FEB 2013
DETAIL NUMBER 2

Drawing Name: W:\Proj\18000\18080\18080.000\AutoCad\Standard Details\STANDARD DETAILS Feb 2013.dwg Layout Name: THRUST BLOCKING Plotted By: KA500913 Plotted on: 2/27/2013 11:26:11 AM

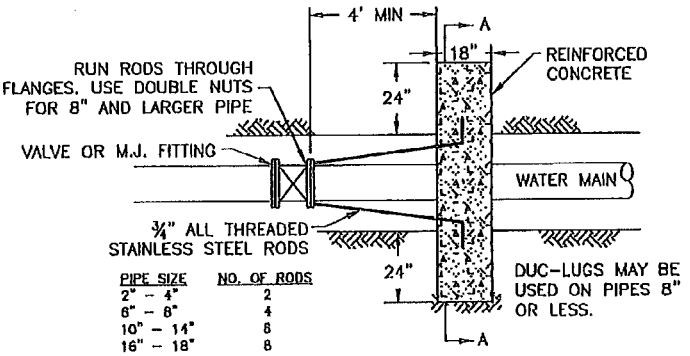

PIPE SIZE	NO. OF RODS
2" – 4"	2
6" – 8"	4
10" – 14"	6
16" – 18"	8

PLAN VIEW

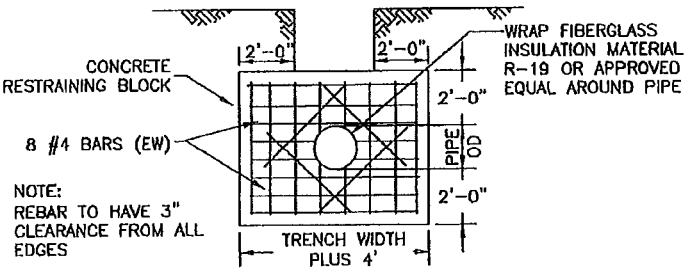

SECTION A-A

BARTLETT & WEST 1719 SOUTHRIDGE DR. JEFFERSON CITY, MO PHONE 573-634-3181	CPWSD NO. 1 OF BOONE COUNTY RESTRAINING BLOCK DETAIL	PROJ NO: 18080.000 DATE: FEB 2013	DETAIL NUMBER 3

Drawing Name: W:\Proj\18000\18080\18080.000\AutoCad\Standard Details\STANDARD DETAILS Feb 2013.dwg Layout Name: RESTRAIN BLOCK Plotted By: KAS00913 Plotted on: 2/22/2013 3:22:42 PM

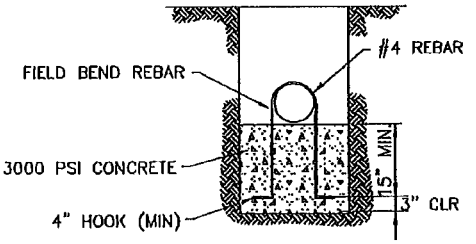

HAIRPIN REBAR DETAIL

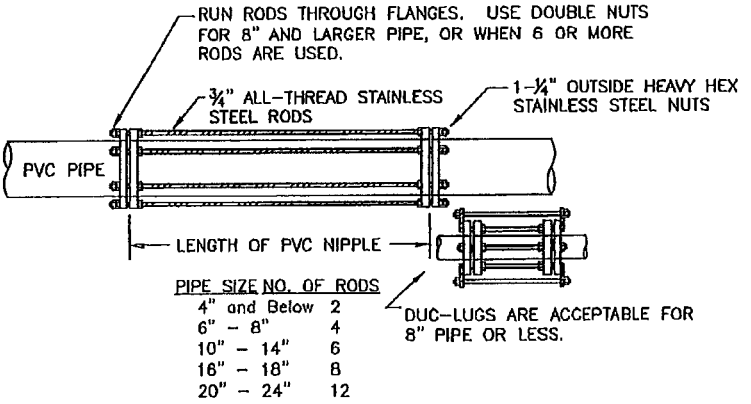

PIPE SIZE	NO. OF RODS
4" and Below	2
6" - 8"	4
10" - 14"	6
16" - 18"	8
20" - 24"	12

TIEBACK RODS MAY BE ATTACHED TO D.I. FITTINGS, VALVES, HYDRANTS, AND CONCRETE RESTRAINING BLOCKS.

TIEBACK ROD DETAIL

BARTLETT & WEST 1719 SOUTHRIDGE DR. JEFFERSON CITY, MO PHONE 573-634-2181	CPWSD NO. 1 OF BOONE COUNTY TIEBACK ROD & HAIRPIN REBAR DETAILS	PROJ NO: 18080.000 DATE: FEB 2013	DETAIL NUMBER 4

Drawing Name: W:\Proj\18000\18080\18080.000\AutoCad\Standard Details\STANDARD DETAILS Feb 2013.dwg Layout Name: TIEBACK-HAIRPIN Plotted By: KAS00913 Plotted on: 2/22/2013 3:23:07 PM

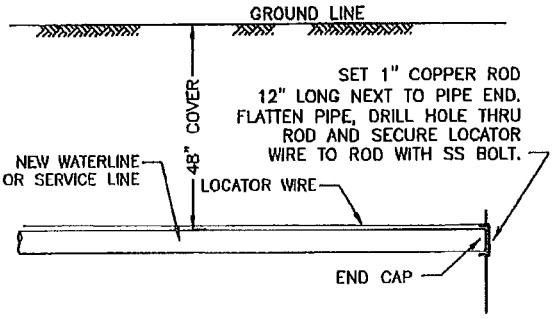

SECTION VIEW

TERMINATION DETAIL

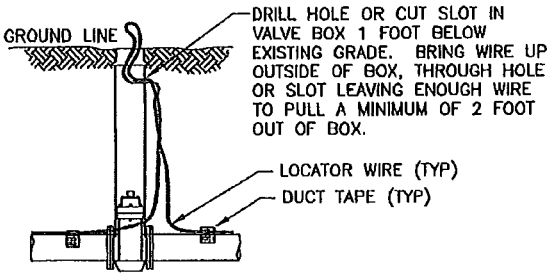

SECTION VIEW

LOCATOR WIRE NOTES:

1. LOCATOR WIRE TO BE PE-45 SOLID BLUE TRACER WIRE AS MANUFACTURED BY KRIS-TECH WIRE COMPANY.
2. DUCT TAPE LOCATOR WIRE TO TOP OF PIPE ON EACH SIDE OF BELL AND ONE IN THE MIDDLE OF THE PIPE.
3. AT ALL ENDS OF WATER LINES, THE LOCATOR WIRE SHALL BE EXTENDED 2' ABOVE THE TOP OF THE GROUND AND BE ACCESSIBLE. THERE SHALL BE NO MORE THAN ONE SPLICE BETWEEN ACCESS POINTS AT VALVES.
4. TWO SETS OF LOCATOR WIRE SHALL BE INSTALLED ON PIPE AT ALL BORINGS UNDER HIGHWAYS, AND CREEKS, OR AT ADDITIONAL LOCATIONS AS SHOWN ON THE PLANS.
5. DO NOT WRAP WIRE AROUND BOLTS, NUTS, ETC.
6. SPLICE LOCATOR WIRE USING SPLICING KIT 3M DBR. DUCT TAPE LOCATOR WIRE TO PIPE ON EACH END OF THE SPLICE.
7. WHERE CALLED FOR ON THE PLANS FOR A SPLICE BOX, THE SPLICE BOX SHALL BE IDENTICAL TO A VALVE BOX RISER AND LID WITH THE INSTALLATION OF THE WIRE IDENTICAL TO THAT IN A VALVE BOX.
8. LOCATOR WIRE INSTALLATION CONTINUITY SHALL BE WARRANTED UNDER THE SAME 1 YEAR PIPE AND WORKMANSHIP WARRANTY.

BARTLETT & WEST
1719 SOUTHRIDGE DR.
JEFFERSON CITY, MO
PHONE 573-634-3181

CPWSD NO. 1 OF BOONE COUNTY LOCATOR WIRE DETAILS	PROJ NO: 18080.000 DATE: FEB 2013	DETAIL NUMBER 5

Drawing Name: W:\Proj\18000\18080\18080.000\AutoCad\Standard Details\STANDARD DETAILS Feb 2013.dwg Layout Name: LOCATOR WIRE Plotted By: KASOD913 Plotted on: 2/22/2013 3:23:30 PM

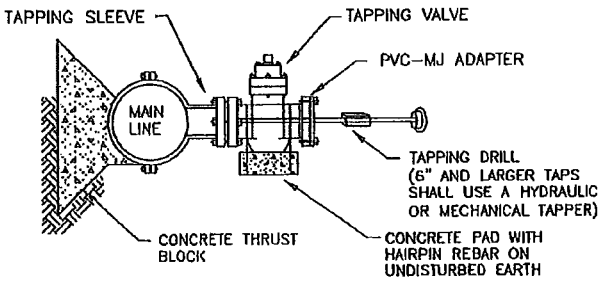

SECTION VIEW

TAPPING SLEEVE AND VALVE ASSEMBLY

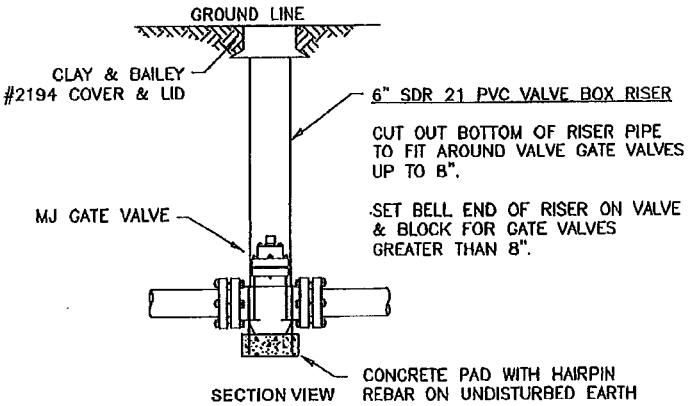

SECTION VIEW

GENERAL NOTES:

1. ANCHOR COUPLING OR PVC PIPE WITH TIEBACK RODS WILL BE REQUIRED BETWEEN VALVE AND FITTINGS
2. WRAP VALVE AND JOINTS WITH VISQUEEN.
3. VALVE AND RISER SHALL BE PLUMB AND CHECKED BY A LEVEL.

GATE VALVE AND VALVE BOX DETAIL

BARTLETT & WEST 1719 SOUTHRIDGE DR. JEFFERSON CITY, MO PHONE 573-634-3181	CPWSD NO. 1 OF BOONE COUNTY GATE VALVE DETAIL	PROJ NO: 18080.000 DATE: FEB 2013	DETAIL NUMBER 6

Drawing Name: W:\Proj\18000\18080\18080.000\AutoCad\Standard Details\STANDARD DETAILS Feb 2013.dwg Layout Name: GATE VALVE Plotted By: KASOOSIS Plotted on: 2/22/2013 3:24:15 PM

NOTES:

1. VALVE, VALVE RISER AND DISCHARGE RISER PIPE TO BE PLUMB AND CHECKED BY A LEVEL.
2. APPROVED FIRE HYDRANTS ARE: AMERICAN DARLING B-84-B-5, CLOW MEDALLION, AND MUELLER CENTURION NO. 250.
3. COMMERCIAL HYDRANT SETTING SHALL BE 8" PIPING, VALVE, ANCHOR COUPLING AND HYDRANT SHOE IN PLACE OF 6" SHOWN ON DRAWING.
4. 4" POST HYDRANT SETTING SHALL BE 4" PIPING, GATE VALVE, ANCHOR COUPLING IN PLACE OF 6" SHOWN ON DRAWING.

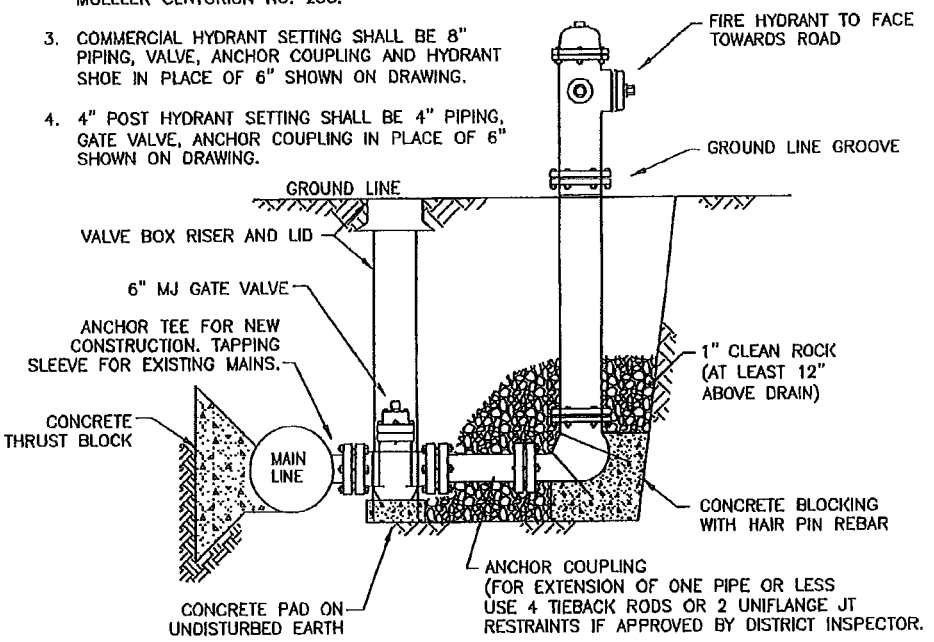

SECTION VIEW

BARTLETT & WEST 1719 SOUTHRIDGE DR. JEFFERSON CITY, MO PHONE 573-634-3181	CPWSD NO. 1 OF BOONE COUNTY FIRE HYDRANT DETAIL	PROJ NO: 18080.000 DATE: FEB 2013	DETAIL NUMBER 7

Drawing Name: W:\Proj\18000\18080\18080.000\AutoCad\Standard Details\STANDARD DETAILS Feb 2013.dwg Layout Name: FIRE HYDRANT Plotted By: KASOOSIS Plotted on: 2/22/2013 3:24:40 PM

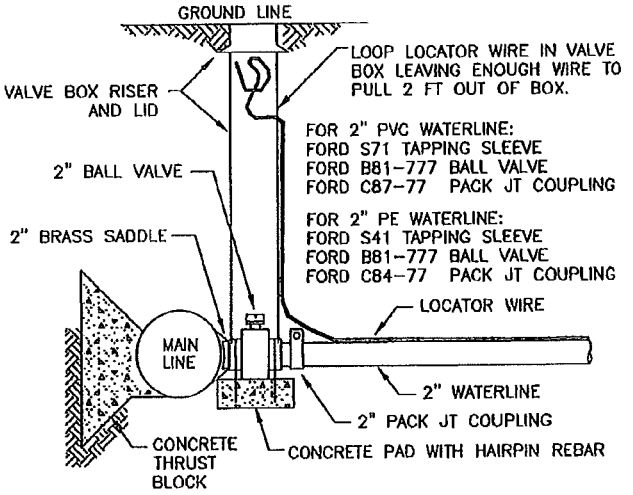

SECTION VIEW

BARTLETT & WEST
1719 SOUTHRIDGE DR.
JEFFERSON CITY, MO
PHONE 573-634-2181

CPWSD NO. 1 OF BOONE COUNTY 2" CONNECTION TO MAIN DETAIL	PROJ NO: 18080.000 DATE: FEB 2013	DETAIL NUMBER 8

Drawing Name: W:\Proj\18000\18080\18080.000\AutoCad\Standard Details\STANDARD DETAILS Feb 2013.dwg Layout Name: 2-CONNECTION Plotted By: KASOOB13 Plotted on: 2/22/2013 3:25:13 PM

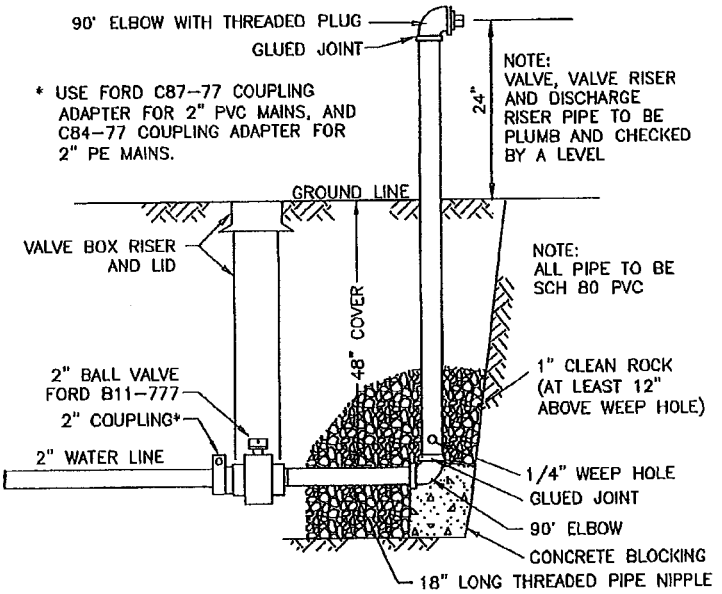

SECTION VIEW

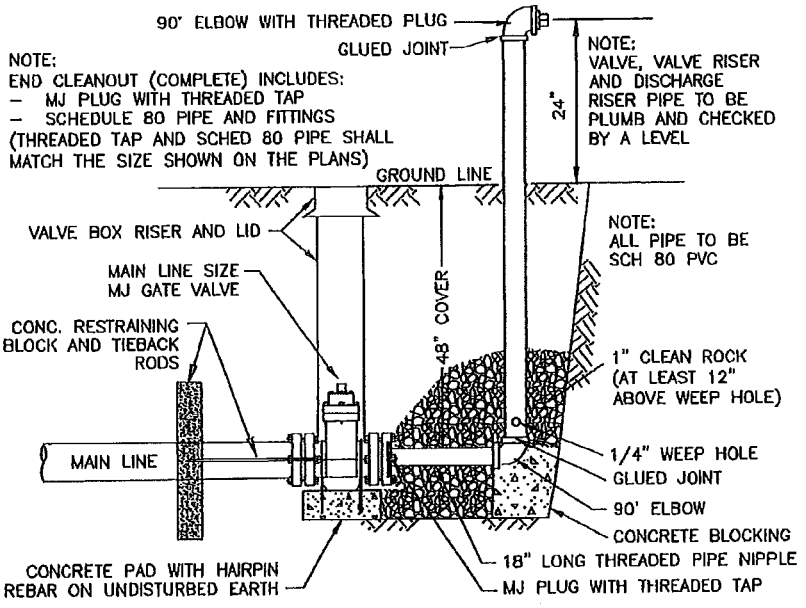

SECTION VIEW

BARTLETT & WEST 1719 SOUTHRIDGE DR. JEFFERSON CITY, MO PHONE 573-634-3181	CPWSD NO. 1 OF BOONE COUNTY END CLEANOUT DETAILS	PROJ NO: 18080.000 DATE: FEB 2013	DETAIL NUMBER 9

Drawing Name: W:\Proj\18000\18080\18080.000\AutoCad\Standard Details\STANDARD DETAILS Feb 2013.dwg Layout Name: END CLEANOUT Plotted By: KA500913 Plotted on: 2/22/2013 3:28:55 PM

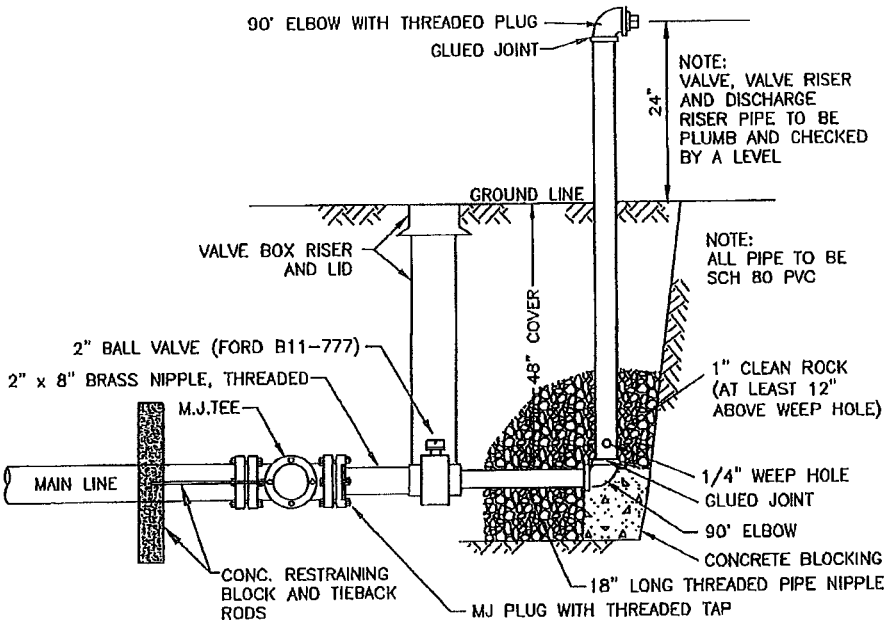

SECTION VIEW

BARTLETT & WEST
1719 SOUTHRIDGE DR.
JEFFERSON CITY, MO
PHONE 573-634-3181

CPWSD NO. 1 OF BOONE COUNTY END CLEANOUT DETAIL AT TEE OR CROSS	PROJ NO: 18080.000 DATE: FEB 2013	DETAIL NUMBER 10

Drawing Name: W:\Proj\18000\18080\18080.000\AutoCad\Standard Details\STANDARD DETAILS Feb 2013.dwg Layout Name: END CLEANOUT (2) Plotted By: KASC0913 Plotted on: 2/22/2013 3:28:58 PM

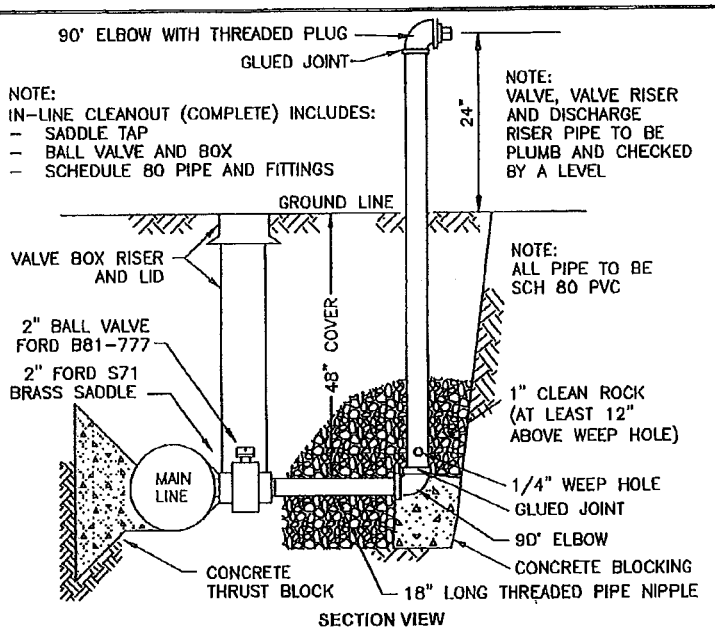

SECTION VIEW

2" SIDE CLEANOUT

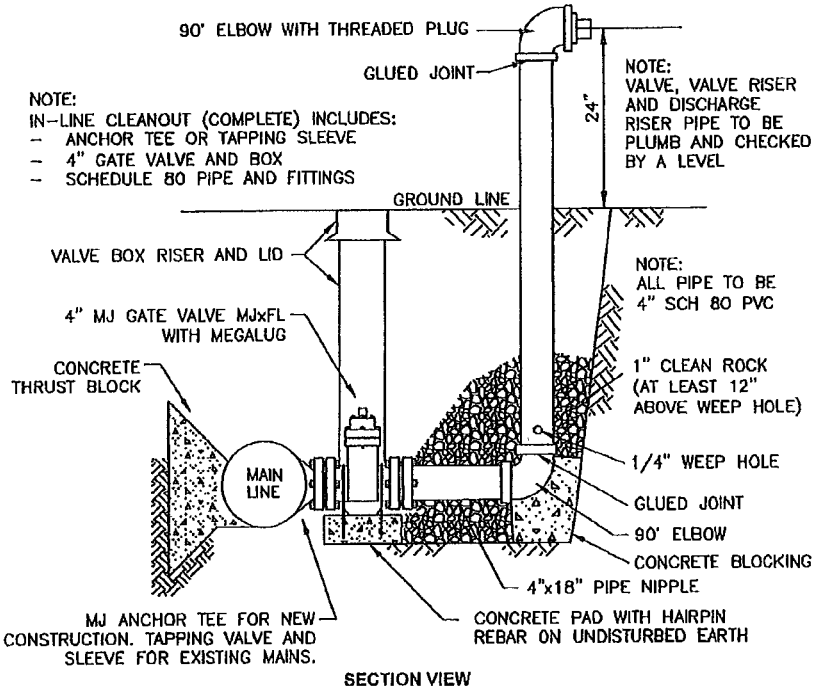

SECTION VIEW

4" SIDE CLEANOUT

BARTLETT & WEST 1719 SOUTHRIDGE DR. JEFFERSON CITY, MO PHONE 573-634-3161	CPWSD NO. 1 OF BOONE COUNTY SIDE CLEANOUT DETAILS	PROJ NO: 18080.000 DATE: FEB 2013	DETAIL NUMBER 11

Drawing Name: W:\Proj\18000\18080\18080.000\AutoCad\Standard Details\STANDARD DETAILS Feb 2013.dwg Layout Name: SIDE CLEANOUT Plotted By: KA5009113 Plotted on: 2/22/2013 3:29:18 PM

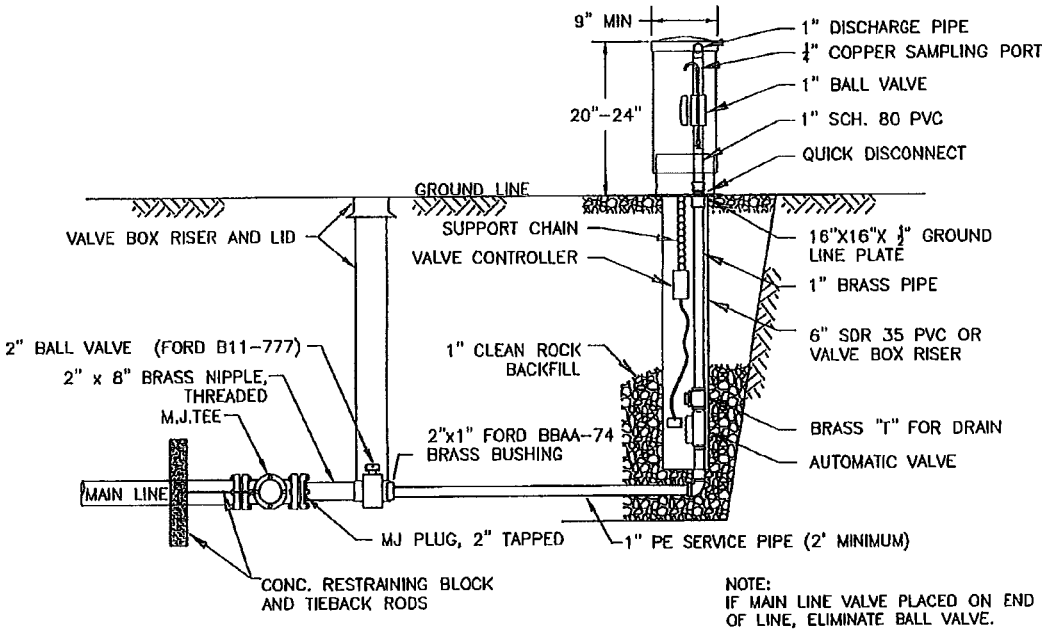

NOTE:
IF MAIN LINE VALVE PLACED ON END OF LINE, ELIMINATE BALL VALVE.

SECTION VIEW

REQUIREMENTS

1. AUTOMATIC FLUSHING DEVICE SHALL HAVE A 1" BRASS FIP INLET, LEADING VERTICALLY INTO A 1"AUTOMATIC SOLENOID VALVE. AUTOMATIC SOLENOID VALVE SHALL HAVE INTERNAL, SELF–CLEANING DEBRIS SCREEN, AND HAVE A 220 PSI RATING. SOLENOID SHALL HAVE NO LOOSE PARTS WHEN REMOVED FROM VALVE.
2. SOLENOID VALVE SHALL HAVE AN O–RING CONNECTOR LOCATED UNDER THE VALVE.
3. EACH UNIT SHALL BE FURNISHED WITH A STAND–ALONE VALVE CONTROLLER. VALVE CONTROLLER WILL NOT REQUIRE A SECOND HAND–HELD DEVICE FOR PROGRAMMING, WITH A MINIMUM OF 9 FLUSHING CYCLES PER DAY.
4. VALVE CONTROLLER SHALL BE SUBMERSIBLE TO 12', OPERATE WITH A 9 VOLT BATTERY AND HAVE RESIN–SEALED ELECTRICAL COMPONENTS.
5. ALL ABOVE GROUND COMPONENTS SHALL BE CONTAINED WITHIN A UV–RESISTANT LOCKING DOMED COVER.
6. UNIT SHALL BE AS MANUFACTURED BY KUPFERLE FOUNDRY COMPANY MODEL 9400–A ST. LOUIS, MO. OR APPROVED EQUAL.
7. VALVE, VALVE RISER TO BE PLUMB AND CHECKED WITH A LEVEL.

BARTLETT & WEST
1719 SOUTHRIDGE DR.
JEFFERSON CITY, MO
PHONE 573-634-3181

CPWSD NO. 1 OF BOONE COUNTY AUTO FLUSH UNIT DETAIL	PROJ NO: 18080.000 DATE: FEB 2013	DETAIL NUMBER 12

Drawing Name: W:\Proj\18000\18080\18080.000\AutoCad\Standard Details\STANDARD DETAILS Feb 2013.dwg Layout Name: AUTO FLUSH Plotted By: KASOOS13 Plotted on: 2/25/2013 11:29:50 AM

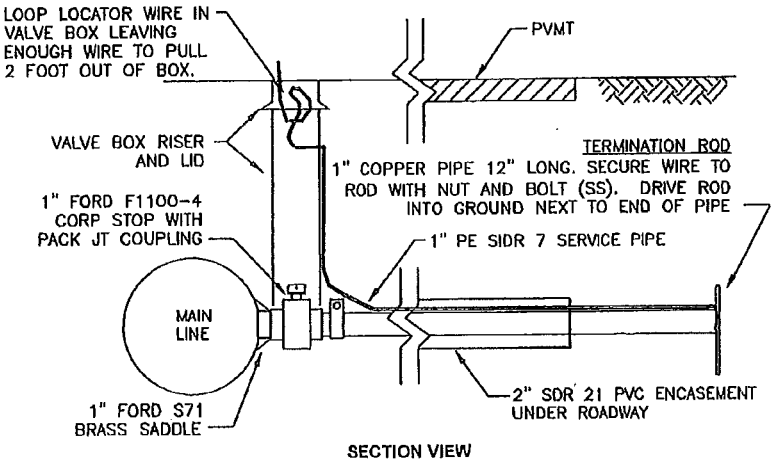

1" SERVICE LINE ROADWAY CROSSING WITHOUT METER CONNECTION

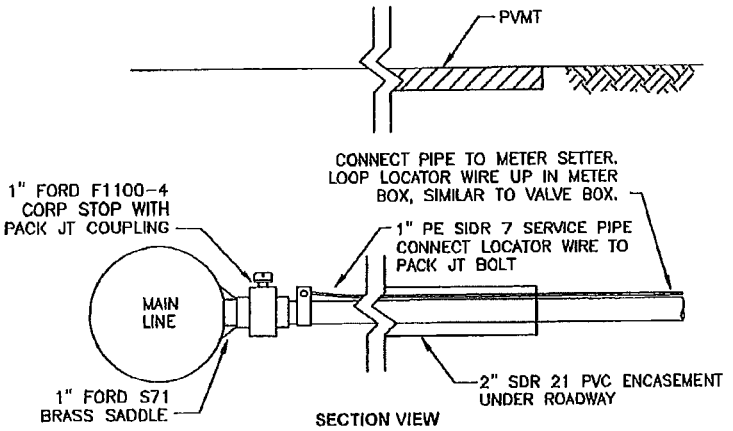

1" SERVICE LINE ROADWAY CROSSING

BARTLETT & WEST 1719 SOUTHRIDGE DR. JEFFERSON CITY, MO PHONE 573-634-3181	CPWSD NO. 1 OF BOONE COUNTY 1" SERVICE LINE ROADWAY CROSSING DETAILS	PROJ NO: 18080.000 DATE: FEB 2013	DETAIL NUMBER 13

Drawing Name: W:\Proj\18000\18080\18080.000\AutoCad\Standard Details\STANDARD DETAILS Feb 2013.dwg Layout Name: 1-CROSSINGS Plotted By: KASOOB913 Plotted on: 3/26/2013 10:53:20 AM

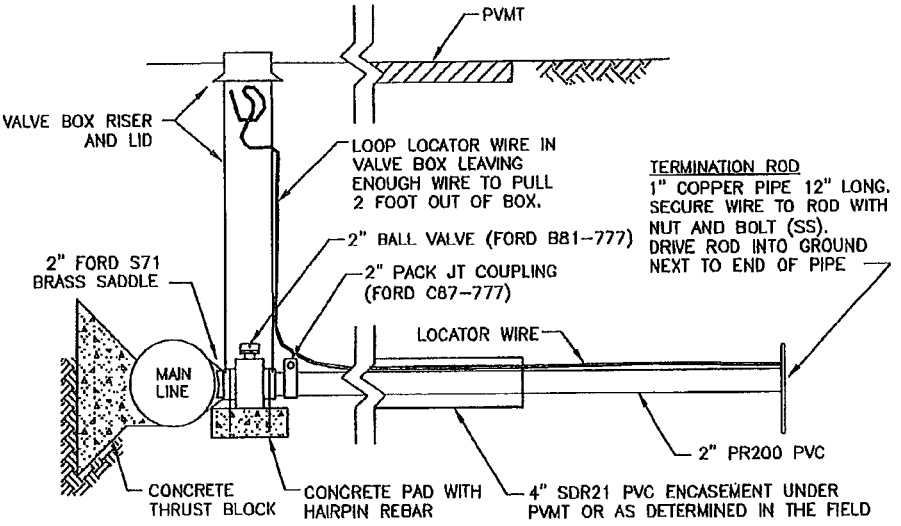

SECTION VIEW

BARTLETT & WEST
1719 SOUTHRIDGE DR.
JEFFERSON CITY, MO
PHONE 573-634-3181

CPWSD NO. 1 OF BOONE COUNTY
2" SERVICE LINE ROADWAY CROSSING DETAIL

PROJ NO: 18080.000
DATE: FEB 2013

DETAIL NUMBER **14**

Drawing Name: W:\Proj\18000\18080\18080.000\AutoCad\Standard Details\STANDARD DETAILS Feb 2013.dwg Layout Name: 2-CROSSING Plotted By: KASO0913 Plotted on: 3/26/2013 10:34:03 AM

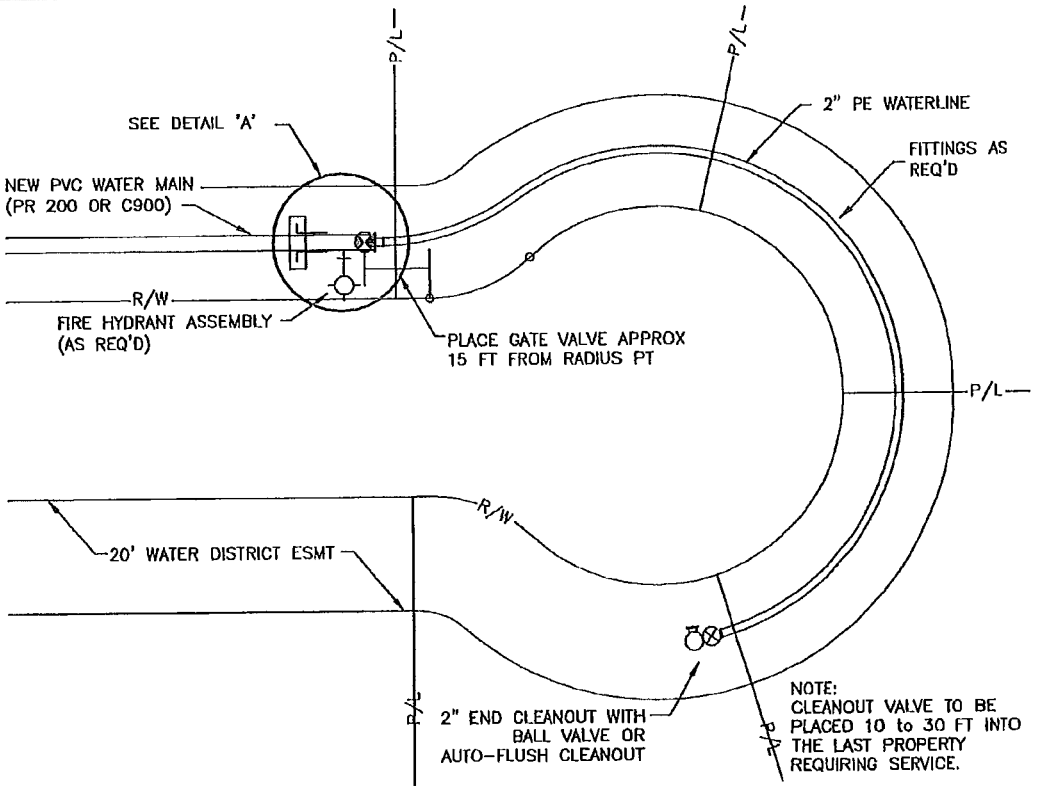

PLAN VIEW

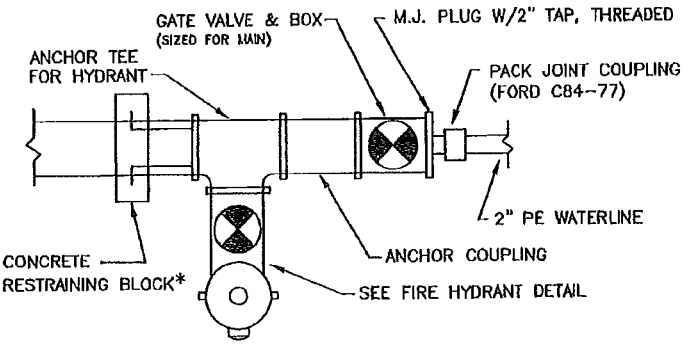

*IF FIRE HYDRANT IS NOT REQUIRED, THEN ANCHOR CONCRETE RESTRAINING BLOCK TO GATE VALVE AND OMIT ANCHOR COUPLING

DETAIL A

BARTLETT & WEST 1719 SOUTHRIDGE DR. JEFFERSON CITY, MO PHONE 573-634-3181	CPWSD NO. 1 OF BOONE COUNTY WATERLINE INSTALLATION AT CUL-DE-SAC	PROJ NO: 18080.000 DATE: FEB 2013	DETAIL NUMBER 15

Drawing Name: W:\Proj\18000\18080\18080.000\AutoCad\Standard Details\STANDARD DETAILS Feb 2013.dwg Layout Name: CUL-DE-SAC Plotted By: KASOOB13 Plotted on: 3/26/2013 10:37:27 AM

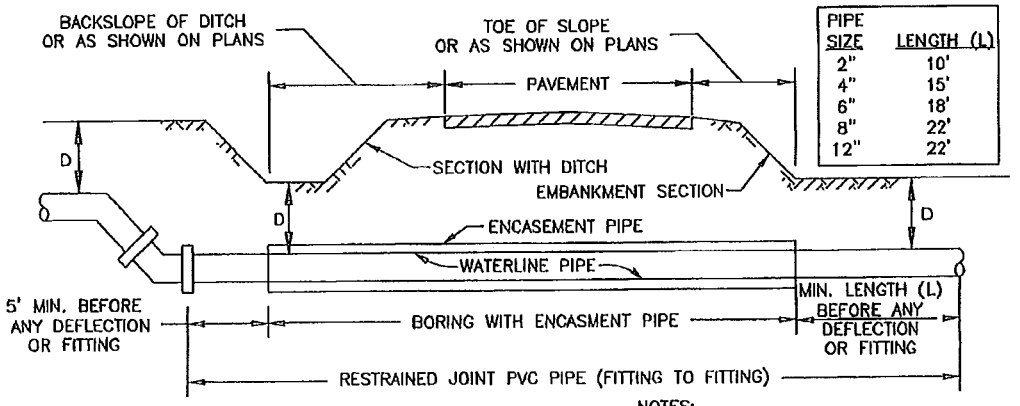

PIPE SIZE	LENGTH (L)
2"	10'
4"	15'
6"	18'
8"	22'
12"	22'

"D"– 48" FOR STEEL ENCASEMENT AND 72" FOR HDPE ENCASEMENT UNLESS OTHERWISE SPECIFIED

NOTES:
1. CASING TYPE, SIZE AND THICKNESS TO BE DETERMINED BY PERMITTING AGENCY OR SHOWN ON PLANS.
2. REFER TO ENCASEMENT DETAIL FOR SPACER AND END SEAL INSTALLATION.
3. LOCATOR WIRE IS NOT SHOWN.

ROADWAY CROSS-SECTION

TYPICAL BORING UNDER STATE HIGHWAY

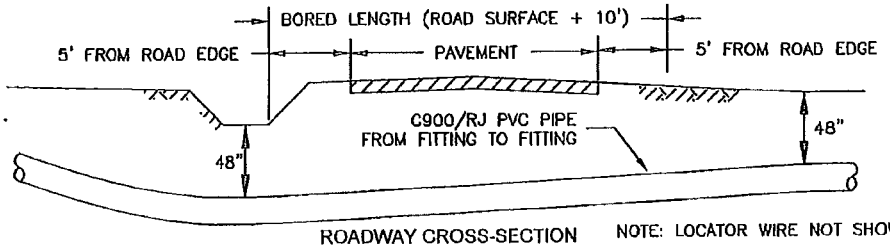

ROADWAY CROSS-SECTION NOTE: LOCATOR WIRE NOT SHOWN.

TYPICAL BORED ROAD CROSSING

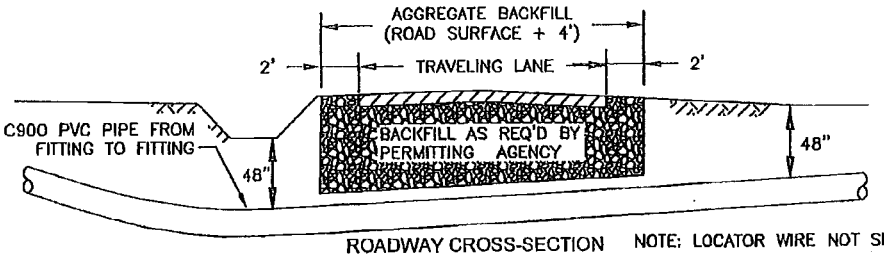

ROADWAY CROSS-SECTION NOTE: LOCATOR WIRE NOT SHOWN.

TYPICAL OPEN CUT ROAD CROSSING

BARTLETT & WEST 1719 SOUTHRIDGE DR. JEFFERSON CITY, MO PHONE 573-634-2181	CPWSD NO. 1 OF BOONE COUNTY TYPICAL ROADWAY CROSSING	PROJ NO: 18080.000 DATE: FEB 2013	DETAIL NUMBER 16

Drawing Name: W:\Proj\18000\18080\18080.000\AutoCad\Standard Details\STANDARD DETAILS Feb 2013.dwg Layout Name: RD CROSSINGS Plotted By: KASOOB13 Plotted on: 3/26/2013 10:36:13 AM

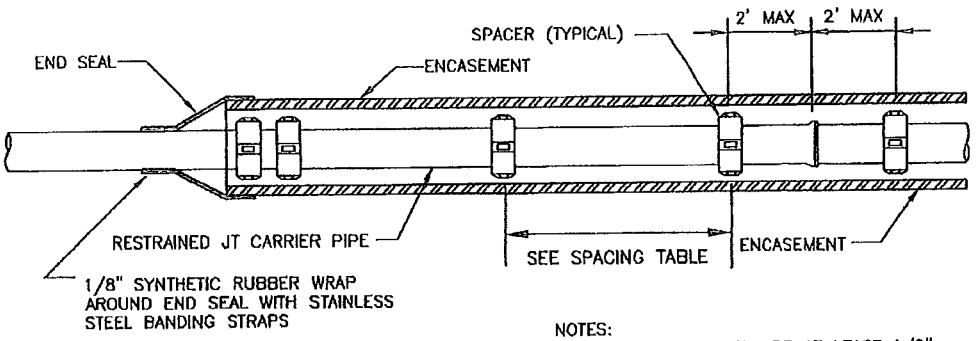

SPACING TABLE		
Carrier Pipe Diameter (in)	Skid Spacing Maximum (ft)	Spacer Width (inch)
3	3	6
4	4.5	6
6	6	6
8	7	8
10	8.5	8
12	9.5	8
12+	10	8

NOTES:

1. SPACER O.D. SHALL BE AT LEAST 1/2" LARGER THAN PIPE BELL O.D.
2. CLEARANCE BETWEEN SPACER O.D. AND ENCASEMENT PIPE I.D. SHALL BE AT LEAST 1-1/2".
3. A MINIMUM OF 3 SPACERS PER INDIVIDUAL PIPE REGARDLESS OF PIPE LENGTH.
4. USE DOUBLE SPACERS AT END & ONE EACH SIDE OF A JOINT CASING.
5. END SEALS TO BE SYNTHETIC RUBBER BOOT WITH STAINLESS STEEL ADJUSTING BINDING STRAPS.
6. LOCATOR WIRE NOT SHOWN.

BARTLETT & WEST
1719 SOUTHRIDGE DR.
JEFFERSON CITY, MO
PHONE 573-634-3181

CPWSD NO. 1 OF BOONE COUNTY
ENCASEMENT PIPE
SPACER DETAIL

PROJ NO: 18080.000
DATE: FEB 2013
DETAIL NUMBER 17

Drawing Name: W:\Proj\18000\18080\18080.000\AutoCad\Standard Details\STANDARD DETAILS Feb 2013.dwg Layout Name: CASING SPACER Plotted By: KASOOSIS Plotted on: 3/26/2013 10:40:42 AM

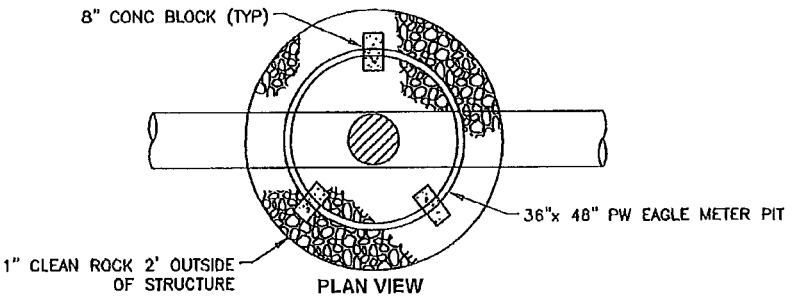

PLAN VIEW

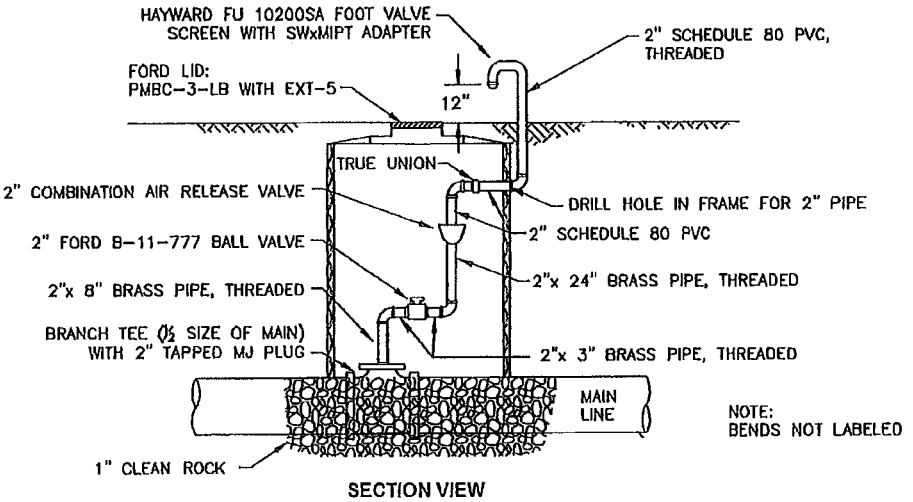

NOTE:
BENDS NOT LABELED

SECTION VIEW

BARTLETT & WEST 1719 SOUTHRIDGE DR. JEFFERSON CITY, MO PHONE 573-634-3191	CPWSD NO. 1 OF BOONE COUNTY AIR RELEASE PIT DETAIL	PROJ NO: 18080.000 DATE: FEB 2013	DETAIL NUMBER 18

Drawing Name: W:\Proj\18000\18080\18080.000\AutoCad\Standard Details\STANDARD DETAILS Feb 2013.dwg Layout Name: AIR RELEASE PIT Plotted By: KASOOS13 Plotted on: 3/26/2013 10:41:11 AM

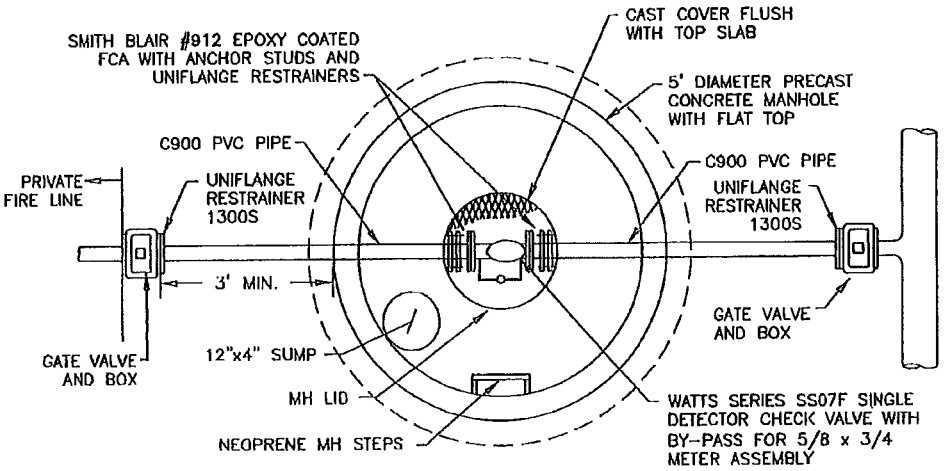

PLAN VIEW

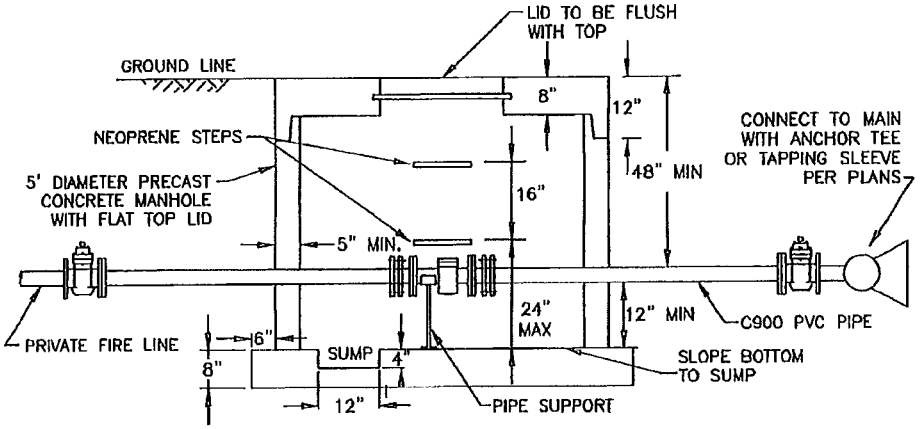

SECTION VIEW

GENERAL NOTES:

1. PRECAST STRUCTURE TO MEET ASTM C478 USING 4000 PSI CONCRETE.
2. RISER JOINTS TO BE A 2.1"x1" MASTIC ROPE.
3. ALL BASES & BOTTOM RISER TO BE POURED MONOLITHIC.
4. FRAME & COVER TO BE DEETER 1180 OR NEENAH R-1960-A.
5. STEP TO BE AMERICAN STEP ML-13 OR EQUAL.
6. ALL PIPE PENETRATIONS TO BE Z-LOCK SEALED.
7. MANHOLE TO BE ORDERED CUSTOM BUILT TO HEIGHT AND EXACT PIPE DEPTH. FOR CORRECT PLACEMENT OF THE PIPE Z LOCK SEALS, MAY REQUIRE EXPOSING EXISTING MAIN TO DETERMINE CORRECT PIPE CENTERLINE DEPTH PRIOR TO ORDERING MANHOLE. PROVIDE PRE-CASTER SIZE OF PIPE, DISTANCE FROM CENTERLINE OF PIPE TO GROUND LINE. THE MANHOLE HEIGHT AND DISTANCE BETWEEN THE CENTERLINE OF PIPE AND TOP OF FLOOR WILL NEED TO BE DETERMINED WITH PRE-CASTER.

BARTLETT & WEST
1719 SOUTHRIDGE DR.
JEFFERSON CITY, MO
PHONE 573-634-3181

CPWSD NO. 1 OF BOONE COUNTY DETECTOR CHECK VALVE MANHOLE	PROJ NO: 18080.000	DETAIL NUMBER
	DATE: FEB 2013	19

Drawing Name: W:\Proj\18000\18080\18080.000\AutoCad\Standard Details\STANDARD DETAILS Feb 2013.dwg Layout Name: DETECTOR CHECK Plotted By: KA5009913 Plotted on: 3/26/2013 10:41:39 AM

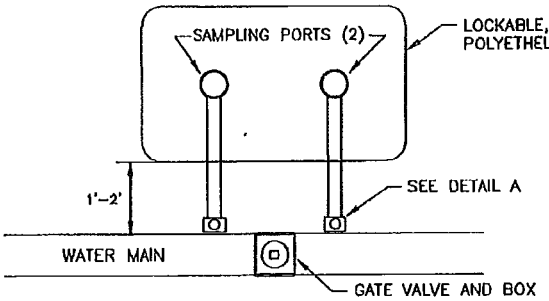

PLAN VIEW

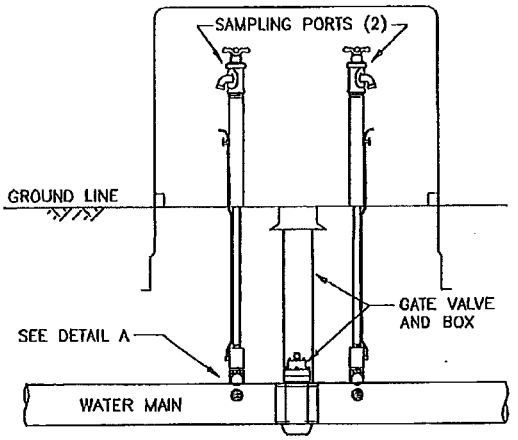

SECTION VIEW

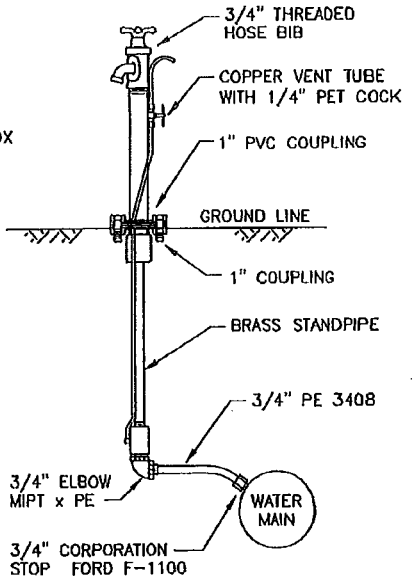

DETAIL A

NOTE:

SAMPLING STATION SHALL BE DUAL STANDPIPE DESIGN, PROVIDING TWO INDEPENDENT ALL-BRASS WATER STREAMS FOR UPSTREAM AND DOWNSTREAM SAMPLING.

EACH SAMPLING STATION SHALL BE PROVIDED WITH TWO INLETS, ¾" IN SIZE, AND TWO THREADED BRASS SAMPLING BIBBS LOCATED ABOVE GROUND NEAR TOP OF EACH STANDPIPE. A COPPER VENT TUBE ON EACH 3 ½' BURY STANDPIPE WILL ENABLE THE WATERWAYS TO BE PUMPED FREE OF STANDING WATER TO PREVENT FREEZING AND MINIMIZE BACTERIA GROWTH.

EACH STANDPIPE SHALL OPERATE INDEPENDENTLY USING A ROTATING HANDLE AND BE ENCLOSED IN ONE UV-RATED LOCKABLE PLASTIC ENCLOSURE.

ALL WORKING PARTS SHALL BE BRASS AND REMOVABLE FROM ABOVE GROUND WITH NO DIGGING, AS MANUFACTURED BY KUPFERLE FOUNDRY COMPANY, ST. LOUIS, MO. MODEL #8100, OR APPROVED EQUAL.

BARTLETT & WEST 1719 BOUYHRIDGE DR. JEFFERSON CITY, MO PHONE 573-634-3181	CPWSD NO. 1 OF BOONE COUNTY WATER SAMPLING STATION	PROJ NO: 18080.000 DATE: FEB 2013	DETAIL NUMBER 20

Drawing Name: W:\Proj\18000\18080\18080.000\AutoCad\Standard Details\STANDARD DETAILS Feb 2013.dwg Layout Name: SAMPLING STA. Plotted By: KASC0913 Plotted on: 3/26/2013 10:42:28 AM

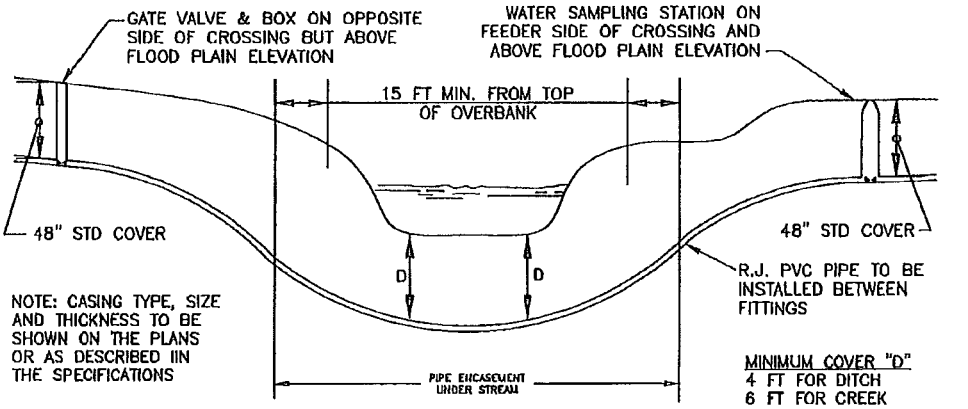

PROFILE VIEW

BARTLETT & WEST
1719 SOUTHRIDGE DR.
JEFFERSON CITY, MO
PHONE 573-634-2181

CPWSD NO. 1 OF BOONE COUNTY TYPICAL STREAM CROSSING	PROJ NO: 18080.000 DATE: FEB 2013	DETAIL NUMBER 21

Drawing Name: W:\Proj\18000\18080\18080.000\AutoCad\Standard Details\STANDARD DETAILS Feb 2013.dwg Layout Name: STREAM CROSSING Plotted By: KASO0913 Plotted on: 3/25/2013 10:43:09 AM

CONSOLIDATED PWSD NO. 1

MEASUREMENT AND PAYMENT

PART 1 GENERAL

This section covers the measurement and payment method for ONLY the waterline replacement work under CONSOLIDATED PUBLIC WATER SUPPLY DISTRICT NO. 1 Project No. 2009-004.

A. Pipeline

1. Measurement: Linear Feet (LF) measured along the pipe.

2. Item Includes: Trenching, bedding, pipe installation, locator wire, backfilling, compaction, pipe, gaskets, polyethylene wrap, joint restraints, site preparation, tree and brush removal, rough grading, and all temporary items necessary for traffic control, line cleaning (pigging), pressure testing, chlorination, and flushing.

3. Item also includes casing spacers, end seals, and installation in existing casing where applicable.

4. Item includes site restoration: All items necessary to restore the site to its original condition, removal of construction debris, restoring fences, drives, mailboxes and other items disturbed during construction. Seeding will be paid for separately.

5. Locator wire will be considered incidental to the price of the pipe installation and include the following items: Wire, tape, and splices for placement on pipe, in valve boxes, and in tracer wire access boxes.

B. Bored Pipeline

1. Measurement without Encasement Pipe: Linear Feet (LF) measured along the pipe to the boring limits shown on the Plans.

2. Measurement with Encasement Pipe: Linear Feet (LF) measured along the encasement pipe to the limits as shown on the Plans.

3. The bore will be classified as an earth bore if the drill bit does not have to change to a rock bit. The bore will be classified as a rock bore if the drill bit has to be changed to a rock bit. The entire bore length will be paid on the basis of the bore classification.

4. Item Includes: Directional and/or conventional boring method of installation, carrier waterline pipe, casing, spacers, end seals, double strands of locator wire under highways, and all other items necessary for the installation of bored pipeline.

C. Bored Pipeline – Mill Creek Crossing

1. Measurement with Encasement Pipe: Linear Feet (LF) measured along the encasement pipe to the limits as shown on the Plans.

2. The bore will be classified as an earth bore if the drill bit does not have to change to a rock bit. The bore will be classified as a rock bore if the drill bit has to be changed to a rock bit. The entire bore length will be paid on the basis of the bore classification.

3. Item Includes: Directional and/or conventional boring method of installation, carrier waterline pipe, casing, end seals, and all other items necessary for the installation of bored fusible pipeline. Casing spacers are not included in this pay item.

D. Gate Valve and Box

1. Measurement: Each (EA)

2. Item Includes: Valve, mechanical joint valve setting, valve box riser and lid, and installation.

E. Pipe Fitting

1. Measurement: Each (EA) for tees, bends, reducers, anchor couplings, sleeves, Uni-Flange joint restraint, and other fittings not included in other pay items.

2. Item Includes: All necessary materials and labor for a complete installation of the fitting.

F. PVC Pipe Nipple with Tieback Rods

1. Measurement: Linear Feet (LF) measured along the length of the pipe.

2. Item Includes: All required 3/4" stainless steel all-thread rods, stainless steel washers and nuts, anchor straps, socket clamps and other items to secure the rods to bolt holes in fittings; and, PVC pipe cut to the required length.

G. Connect to Existing Waterlines

1. Measurement: Lump Sum (LS)

2. Item Includes: Cut-in connection to existing waterline as shown on the plans complete with all work related to making the connection to the existing pipe, field cutting and removing of pipe, furnishing and installing the end cap on pipe to be abandoned; notification to customers that water will be shut off; and coordination with Water District in turning off isolation valves. Wet taps are not included in this pay item.

H. Water Service Lines

1. Measurement: Linear Feet (LF) for PE service lines.

2. Items Included for Open-Cut Installation: Pipe, fittings for connections to pipes, locator wire, trenching, bedding, installation, backfilling, and compaction.

3. Aggregate backfill material will be paid for separately for open-cut installations.

4. Items Included for Bored Installation: Pipe, locator wire, boring, casing, installation, backfilling, and compaction of disturbed areas. Excavation will be unclassified.

5. 2" encasement pipe footage will be paid separately from the 1" water service line. The 1" water service line will be paid from the connection at the main to the meter connection.

I. Relocate Water Meter

1. Measurement: Each (EA)

2. Item Includes: Removal of the complete meter set from its existing location and installing a new meter pit setter (provided by Owner) at a new location; all fittings necessary to tap the new water line; connect the new water service to the meter pit setter; and connect the meter to the existing service line to the house.

3. Service line piping will be paid for separately.

J. Reconnect Water Meter

1. Measurement: Each (EA)

2. Item Includes: All fittings necessary to tap new water line and reconnect service line to existing service line going to the meter, or reconnect service line directly at the meter pit setter.

3. Service line pipe will be paid for separately. If a new meter pit setter is required, it will be provided by the District.

K. Rock Trench Excavation

1. Measurement: Cubic Yards (CY) to the nearest 0.1 CY, as measured in the field.

2. Item Includes: Open cut rock excavation methods required to remove rock from the trench, and removal of the rock from the project area.

3. Removal of facilities described above when bacteriological and pressure testing are accepted by the Water District.

L. Granular Material

1. Measurement: Tonnage (TON) to the nearest 0.01 ton from truck haul tickets of rock delivered to the site.

2. Item Includes: All items necessary for the hauling to the site and placement of rock for trench backfill under roads, gravel road surface restoration, and at structures.

M. Concrete Thrust Blocking

1. Measurement: Cubic Yards (CY) to the nearest 0.1 CY from truck tickets delivered to the site.

2. Item Includes: Concrete, forming, tie rods and rebar for restraining blocks, hairpin rebar for valves, concrete blocking for bends, end caps, other fittings, pipe encasement, and installation.

N. Construction Staking

1. Measurement: Lump Sum (LS)

2. Item Includes: Furnishing all employees, equipment, tools, stakes, and other material required to stake out the waterline in a manner satisfactory to the District Inspector, and re-stake when stakes are lost or destroyed for any reason.

PART 2 PRODUCTS (NOT USED)

PART 3 EXECUTION (NOT USED)

END OF SECTION

CONSOLIDATED WATER
Boone County, Missouri

Base Bid For Fence Replacement at CPWSD No. 1 Tower & Well Site on Scott Blvd.

Item	Description	Unit	Bid Quantity	Price	Amount
F1	6 ft. Chain Link Security Fence	LF	660		
F2	Removal of Existing Chain Link Fence, Posts, and Gates	LF	660		
F3	Installation of Temporary Fencing	LF	200		
F4	20 ft. Double Swing Gate	EA	1		

Total Base Bid $ _____

MEASUREMENT AND METHOD OF PAYMENT

A. 6 ft. Tall Chain Link Security Fence

1. Measurement: Linear Feet (LF)
2. Items Included: All material and labor necessary to install 6 ft. high fence with three strand barbed wire as shown in the details and technical specifications. This includes line post and new corner post to connect to the portion of the fence that is not replaced.

B. Removal of Existing Chain Link Fence and Gates

1. Measurement: Linear Feet (LF)
2. Items Included: All labor necessary to remove existing fence, mesh, barbed wire, post, gates, and concrete.

C. 20 ft. Wide Double Swing Gate

1. Measurement: Each (EA)
2. Items Included: All material and labor necessary to install gate and gate post as shown in the details and technical specifications.

CHAIN LINK FENCES AND GATE SPECIFICATIONS

1 GENERAL

This section contains the specifications for the installation of perimeter fencing for the well site. See details on plans for additional construction information.

2. SUBMITTALS

Submit product data in the form of manufacturer's technical data, specifications, and installation instructions for fence, posts, fabric, gates, and accessories in accordance with Section 01330.

3. MATERIALS

3.1 Steel Fabric

Comply with Chain Link Fence Manufacturer's Institute (CLFMI) Product Manual. Furnish one-piece fabric widths. Wire size includes zinc or aluminum coating. Size: 2-inch mesh, 9-gage

3.2 Barbed Wire

Barbed wire shall be aluminized steel wire made from three (3) strands of twisted 10# x12# SWG wire with 4-point 14 1/2 ga. aluminized steel barbs at 5 inches spacing.

3.3 Steel Framework

Posts, square tubing, rails, braces and gate frames shall be SS40 coated inside and outside of pipe. Refer to details on the drawings for sizes and placement.

3.4 Fittings and Accessories

A. Material: Comply with ASTM F 626. Galvanized iron or steel, to suit manufacturer's standards.

B. Zinc Coating: Unless specified otherwise, galvanize steel fence fittings and accessories in accordance with ASTM A 153.

C. Tie Wires: 9-gage wire alloy 1100-H14 or equal.

D. Post Brace Assembly: Manufacturer's standard diagonal brace rail at end and gateposts and at both sides of corner and pull posts. Install diagonal cross-bracing consisting of 3/8-inch diameter adjustable-length threaded truss rods on a turnbuckle.

E. SS20 top rail installed as part of the new fence bid item.

F. Use tension wire on bottom.

G. Post Tops: the post tops shall be designed as a weather-tight closure cap for the tubular posts.

H. Supporting Arms:

1. One supporting arm shall be placed on each line and pull post.

2. Single arm at 45 degrees with vertical, sloping to outside of fence.

3. Integral with post top and designed as a weather-tight closure cap.

4. Constructed for attaching 3 rows of barbed wire to each arm.

5. Designed for 200 pound minimum pull-down load.

6. Malleable iron or pressed steel.

I. Latch: The latch for the double leaf gate shall be a Strong Arm Industrial Gate Latch, as manufactured by Hoover Fence Co., or equal.

3.5 Gates

Fabricate perimeter frames of gates from metal and finish to match fence framework. Assemble gate frames by welding. Provide horizontal and vertical members to ensure proper gate operation and attachment of fabric, hardware, and accessories.

Provide same fabric as for fence unless otherwise indicated. Install fabric with tension bars and bands at vertical edges and at top and bottom edges.

Install diagonal cross-bracing consisting of 3/8"-inch diameter adjustable-length threaded truss rods on gates to ensure frame rigidity without sag or twist.

Provide same fabric as for fence unless otherwise indicated. Install fabric with tension bars and bands at vertical edges and at top and bottom edges.

Install diagonal cross-bracing consisting of 3/8"-inch diameter adjustable-length threaded truss rods with turnbuckle on gates to ensure frame rigidity without sag or twist.

4. INSTALLATION

4.1 General

Install fence in compliance with ASTM F 569. Do not begin installation and erection before final grading is completed, unless otherwise permitted.

4.2 Excavation

Drill or hand-excavate (using post-hole digger) holes for posts to diameters and spacing indicated, in firm, undisturbed or compacted soil.

4.3 Setting Posts

Center and align posts in holes. Space maximum 10 ft. O.C. unless otherwise indicated.

Protect portion of posts above ground from concrete splatter. Place a minimum of 3000 PSI (5 bag) ready mix concrete encasement around posts and vibrate or tamp for consolidation. Check each post for vertical and top alignment, and hold in position during placement and finishing operations.

4.4 Brace Assemblies

Install braces so posts are plumb when diagonal rod is under proper tension.

4.5 Bottom Tension Wire:

Install tension wire within 6 inches of bottom of fabric before stretching fabric and tie to each post with not less than same gage and type of wire. Pull wire taut, without sags. Fasten fabric to tension wire with 9-gage hog rings of same material and finish as fabric wire, spaced maximum 24" O.C.

4.6 Fabric

Leave approximately 2 inches between finish grade and bottom selvage unless otherwise indicated. Pull fabric taut and tie to posts, rails, and tension wires. Install fabric on security side of fence, and anchor to framework so that fabric remains in tension after pulling force is released.

4.7 Tension or Stretcher Bars

Thread through or clamp to fabric 4 inches O.C., and secure to end, corner, pull, and gate posts with tension bands spaced not over 15 inches O.C.

4.8 Tie Wires

Use U-shaped wire of proper length to secure fabric firmly to posts and rails with ends twisted at least 2 full turns. Bend ends of wire to minimize hazard to persons or clothing. Tie fabric to line posts 12 inches O.C. and to rails and braces 24 inches O.C.

4.9 Fasteners

Install nuts for tension bands and hardware bolts on side of fence opposite fabric side. Spot weld all fasteners.

4.10 Gates

Install gates plumb, level, and secure for full opening without interference. Install ground-set items in concrete for anchorage. Adjust hardware for smooth operation and lubricate where necessary.

4.11 Height

Fence shall be six feet (6') high from ground elevation to top bar of chain link fence. Barbed wire shall be constructed above this height.

GRANT OF EASEMENT FOR STREET PURPOSES

THIS INDENTURE, made on the _____ day of _____, 2015, by and between CONSOLIDATED PUBLIC WATER SUPPLY DISTRICT NO. 1 OF BOONE COUNTY, MISSOURI, a consolidated public water supply district of Boone County, Missouri, organized pursuant to Chapter 247 of the Revised Statutes of Missouri, Grantor, and the City of Columbia, Missouri, a municipal corporation in the County of Boone and the State of Missouri, Grantee; Grantee's mailing address is Post Office Box 6015, Columbia, MO 65205.

WITNESSETH:

That Grantor, in consideration of the sum of Ten Dollars ($10.00), to us in hand paid by the City of Columbia, Missouri, the receipt of which is hereby acknowledged, do hereby grant unto said City, its successors and assigns, an easement of way for street purposes, over the following described real estate, situated in the County of Boone, State of Missouri, to wit:

Project: Scott Boulevard Phase III (32-02-02)

Parcel: 20-100-05-00-002.00

LEGAL DESCRIPTION:

An irregular shaped parcel of land along the east line of a tract of land described in a report of commissioners in Book 460 at Page 38, said tract also being Tracts 1 and 2 of the survey as recorded in Book 1547 at Page 745, both of the Boone County Records; situate in the northeast quarter (1/4) of the northeast (1/4) of Section 5, Township 47 North, Range 13 West in Boone County, Missouri; said parcel being described as follows:

BEGINNING at the northeast corner of said tract, said corner also being the northeast corner of Section 5, Township 47 North, Range 13 West; thence along the east line of said tract, said line also being the north-south section line of said section, S.1°03'15"W., 643.14 feet to the southeast corner of said tract; thence along the south line of said tract N.89°39'30"W., 34.00 feet; thence leaving said line N.1°03'15"E., 297.63 feet; thence along a curve to the left having a radius of 1,956.50 feet a distance of 198.06 feet (the chord of said curve having bearing and distance of N.1°50'45"W., 197.98 feet); thence N.4°44'45"W., 155.50 feet to the north line of said tract, said line also being the east-west section line; thence along said line S.83°50'15"E., 6.63 feet to the southeast corner of Section 32, Township 48 North, Range 13 West; thence continuing along said line S.82°36'10"E., 53.46 feet to the POINT OF BEGINNING and containing 0.58 acres inclusive of 0.54 acres of existing water utility easement as recorded in

EXHIBIT "C"

Book 1948 at Page 880 and Boone County Roadway and Utility easement as recorded in Book 1397 at Page 13, both of the Boone County Records.

This grant includes the right of the City of Columbia, Missouri, its officers, agents and employees, to enter upon said real estate at any time for the purposes of exercising any of the rights herein granted.

The Grantor warrants that, subject to liens and encumbrances of record at the date of this easement, they are the owners of the above-described land and have the right and authority to make and execute this Grant of Easement.

IN WITNESS WHEREOF, the said Consolidated Public Water Supply District No. 1 of Boone County Mo has caused these presents to be signed by its President the day and year first written above.

CONSOLIDATED PUBLIC WATER SUPPLY DISTRICT NO.1 OF BOONE COUNTY MO

By: _____
Jerome Glascock, President

Attest: _____
Janet Sears, Clerk

STATE OF MISSOURI)
) SS.
COUNTY OF BOONE)

On this _____ day of _____, 2015 before me appeared Jerome Glascock, to me personally known, who, being by me duly sworn did say that he is the President of Consolidated Public Water Supply District No. 1 of Boone County, Missouri, a public water supply district of the State of Missouri and a public benefit corporation under the laws of the State of Missouri, and that the seal affixed to the foregoing instrument is the corporate seal of said corporation, and that said instrument was signed and sealed on behalf of said corporation by authority of its Board of Directors, and said President acknowledged said instrument to be the free act and deed of said corporation.

IN TESTIMONY WHEREOF, I have hereunto set my hand and affixed my official seal, at my office in _____, Missouri, the day and year first above written.

My commission expires: _____.

_____
Notary Public

AGREEMENT FOR TEMPORARY CONSTRUCTION EASEMENT

THIS AGREEMENT for temporary construction easement entered into this _____ day of _____, 2015, by and between, CONSOLIDATED PUBLIC WATER SUPPLY DISTRICT NO. 1 OF BOONE COUNTY, MISSOURI, a consolidated public water supply district of Boone County, Missouri, organized pursuant to Chapter 247 of the Revised Statutes of Missouri, Grantor, and the City of Columbia, Missouri, a municipal corporation in the County of Boone and the State of Missouri, Grantee; Grantee's mailing address is Post Office Box 6015, Columbia, MO 65205.

WITNESSETH:

That the Grantor, in consideration of the sum of Ten Dollars ($10.00), to us in hand paid by the City of Columbia, Missouri, a municipal corporation, the receipt of which is hereby acknowledged, do hereby grant unto the Grantee, a temporary easement and right-of-way to be in effect during the time of construction of Scott Blvd. Phase III project in Boone County for the following purposes, namely: to provide access to said construction project by granting the right to enter upon, permanently alter the grade, store materials, and operate and park equipment on, over and across the right-of-way hereinafter described, which is located within the boundaries of a parcel of land situated in the County of Boone and State of Missouri and described as follows:

Project: Scott Boulevard Phase III (32-02-02)

Parcels: 20-100-05-00-002.00

LEGAL DESCRIPTION:

An irregular shaped parcel of land along the east line of a tract of land described in a report of commissioners in Book 460 at Page 38, said tract also being Tracts 1 and 2 of the survey as recorded in Book 1547 at Page 745, both of the Boone County Records; situate in the northeast quarter (1/4) of the northeast (1/4) of Section 5, Township 47 North, Range 13 West in Boone County, Missouri; said parcel being described as follows:

BEGINNING at the northeast corner of said tract, said corner also being the northeast corner of Section 5, Township 47 North, Range 13 West; thence along the east line of said tract, said line also being the north-south section line of said section, S.1°03'15"W., 643.14 feet to the southeast corner of said tract; thence along the south line of said tract N.89°39'30"W., 54.00 feet to the southwest corner of the permanent utility easement granted this date; thence leaving said line along the west line of said easement N.1°03'15"E., 85.81 feet; thence leaving said line N.77°05'20"W., 53.29 feet; thence N.1°03'15"E., 30.00 feet; thence N.76°47'15"E., 53.81 feet to the west line of said easement; thence along said line N.1°03'15"E., 157.86 feet; thence continuing along said line along a curve to the left having a radius of 1,936.50 feet a distance of 26.69 feet (the chord of said curve having bearing and distance of N.0°39'35"W., 26.69 feet; thence leaving said

EXHIBIT "D"

line N.89°58'25"W., 7.00 feet; thence N.1°08'00"W., 94.22 feet; thence N.87°10'25"E., 7.00 feet to the west line of said easement; thence along said line along a curve to the left having a radius of 1,936.50 feet a distance of 74.77 feet (the chord of said curve having bearing and distance of N.3°38'25"W., 74.77 feet); thence leaving said line N.4°44'45"W., 33.57 feet; thence N.12°45'25"W., 130.57 feet to the north line of said tract, said line also being the east-west section line; thence along said line S.83°50'15"E., 45.53 feet; thence continuing along said line S.82°36'10"E., 53.46 feet feet to the POINT OF BEGINNING and containing 3,110 square feet exclusive of existing water utility easement as recorded in Book 1948 at Page 880 and Boone County Roadway and Utility easement as recorded in Book 1397 at Page 13, both of the Boone County Records and permanent street and permanent utility easement granted this date.

TO HAVE AND TO HOLD said temporary easement and right-of-way unto the Grantee and to its successors and assigns during the period of construction herein referred to. Said easement shall cease within one year of acceptance of the completed construction project by the City Council or other date as specified in the City's acceptance of the project.

This grant includes the right of the City of Columbia, Missouri, its officers, agents and employees, to enter upon said real estate at any time during the time of construction for the purpose of exercising any of the rights herein granted.

The Grantor covenants that it has the right and authority to make and execute this agreement on behalf of said corporation.

IN WITNESS WHEREOF, the said Grantor has caused these presents to be signed by its President and attested by its Clerk the day and year first written above.

CONSOLIDATED PUBLIC WATER SUPPLY DISTRICT NO.1 OF BOONE COUNTY MO

By: _____
Jerome Glascock, President

Attest: _____
Janet Sears, Clerk

STATE OF MISSOURI)
) SS.
COUNTY OF BOONE)

On this _____ day of _____, 2015 before me appeared Jerome Glascock, to me personally known, who, being by me duly sworn did say that he is the President of Consolidated Public Water Supply District No. 1 of Boone County, Missouri, a public water supply district of the State of Missouri and a public benefit corporation under the laws of the State of Missouri, and that the seal affixed to the foregoing instrument is the corporate seal of said corporation, and that said instrument was signed and sealed on behalf of said corporation by authority of its Board of Directors, and said President acknowledged said instrument to be the free act and deed of said corporation.

IN TESTIMONY WHEREOF, I have hereunto set my hand and affixed my official seal, at my office in _____, Missouri, the day and year first above written.

My commission expires: _____.

_____
Notary Public

EASEMENT FOR UTILITY PURPOSES
(BY INDIVIDUALS)

KNOW ALL PERSONS BY THESE PRESENTS:

THAT THE UNDERSIGNED, CONSOLIDATED PUBLIC WATER SUPPLY DISTRICT NO. 1 OF BOONE COUNTY, MISSOURI, a consolidated public water supply district of Boone County, Missouri, organized pursuant to Chapter 247 of the Revised Statutes of Missouri, hereinafter referred to as Grantor(s), on this _____ day of _____, 2015 in consideration of the sum of Ten Dollars ($10.00) and other valuable consideration, the receipt and sufficiency of which are hereby acknowledged, does or do hereby Grant, Bargain, and Sell to THE CITY OF COLUMBIA, MISSOURI, a municipal corporation, herein City or Grantee (Grantee's mailing address is: P.O. Box 6015, Columbia, MO 65205), its successors and assigns, both individually and as Trustee for the use and benefit of the "Benefited Parties" described below herein, hereinafter called Grantees, a utility easement with the right, privilege and authority to erect, construct, install, lay, operate, survey, inspect, maintain, repair, rebuild, replace and remove utility lines and utility facilities, including but not limited to water mains, power transmission lines, sanitary sewer lines and all other public utilities, and all necessary appurtenances to make said utilities complete and usable, over, under, across, and upon the following described real estate situated in Boone County, Missouri, to-wit:

Project: Scott Boulevard Phase III (32-02-02)

Parcels: 20-100-05-00-002.00

LEGAL DESCRIPTION:

An irregular shaped parcel of land across the east part of a tract of land described in a report of commissioners in Book 460 at Page 38, said tract also being Tracts 1 and 2 of the survey as recorded in Book 1547 at Page 745, both of the Boone County Records; situate in the northeast quarter (1/4) of the northeast (1/4) of Section 5, Township 47 North, Range 13 West in Boone County, Missouri; said parcel being described as follows:

Starting at the southeast corner of said tract; thence along the south line of said tract N.89°39'30"W., 34.00 feet to the POINT OF BEGINNING at the southwest corner of the permanent street easement granted this date; thence continuing along said line N.89°39'30"W., 20.00 feet; thence leaving said line N.1°03'15"E., 297.88 feet; thence along a curve to the left having a radius of 1,936.50 feet a distance of 196.04 feet (the chord of said curve having bearing and distance of N.1°50'45"W., 195.95 feet); thence N.4°44'45"W., 159.36 feet to the north line of said tract, said line also being the east-west section line; thence along said line S.83°50'15"E., 20.37 feet to the northwest corner of the permanent street easement granted this date; thence leaving said line along the west line of said easement S.4°44'45"E., 155.50 feet; thence along a curve to the right having a radius of 1,956.50 feet a distance of 198.06 feet (the chord of said curve having bearing and distance of S.1°50'45"E., 197.98 feet); thence S.1°03'15"W., 297.63 feet

The "Benefited Parties" referred to above herein shall be deemed to mean any public corporation, any public entity, any public water supply district, any utility cooperative, and any utility company regulated by the

EXHIBIT "E"

Missouri Public Service Commission, and said Benefited Parties shall have the right to use the easement area for the aforesaid purposes.

The parties agree that in the event the City or a Benefited Party installs utility lines or utility facilities in the above described easement area, such installation shall not materially interfere with any preexisting utility lines or utility facilities installed in the easement area by the City or a Benefited Party and that the provisions of this paragraph may be enforced by proceedings in law or in equity, or both, and in any said legal proceedings the prevailing party shall have the right to recover from the other party or parties all reasonable litigation expenses, including a reasonable attorney fee.

The parties agree that this easement may not be terminated or amended without the prior written consent of THE CITY OF COLUMBIA, MISSOURI and each Benefited Party which has any utility lines or utility facilities located in the easement area at the time of the proposed termination or amendment.

Grantor agrees that it will not erect any building or structure on the easement area or permit the installation of any obstruction on the easement area which will interfere with the construction, placement, operation and maintenance of utility lines and facilities in the easement area.

THE CITY OF COLUMBIA, MISSOURI and/or any Benefited Party shall have the right to trim, clear, cut and remove from the easement area any tree, brush, shrub, plant or other object of any kind which in the reasonable judgment of said party may interfere with the installation and/or maintenance of utility lines and utility facilities in the easement area.

IN WITNESS WHEREOF, the said Consolidated Public Water Supply District No. 1 of Boone County Mo has caused these presents to be signed by its President the day and year first above written.

CONSOLIDATED PUBLIC WATER SUPPLY DISTRICT NO.1
OF BOONE COUNTY MO

By: _____
Jerome Glascock, President

Attest: _____
Janet Sears, Clerk

STATE OF MISSOURI)
) SS.
COUNTY OF BOONE)

On this _____ day of _____, 2015 before me appeared Jerome Glascock, to me personally known, who, being by me duly sworn did say that he is the President of Consolidated Public Water Supply District No. 1 of Boone County, Missouri, a public water supply district of the State of Missouri and a public benefit corporation under the laws of the State of Missouri ("the District"), and that the seal affixed to the foregoing instrument is the corporate seal of said corporation, and that said instrument was signed and sealed on behalf of said corporation by authority of its Board of Directors, and said President acknowledged said instrument to be the free act and deed of said corporation.

IN TESTIMONY WHEREOF, I have hereunto set my hand and affixed my official seal, at my office in _____, Missouri, the day and year first above written.

My commission expires: _____.

_____
Notary Public

EASEMENT FOR UTILITY PURPOSES
(BY INDIVIDUALS)

KNOW ALL PERSONS BY THESE PRESENTS:

THAT THE UNDERSIGNED, Joseph L. Kurzejeski and Elda L. Kurzejeski, Trustees of the Kurzejeski Family Revocable Living Trust, of Boone County, Missouri, hereinafter referred to as Grantor(s), on this _____ day of _____, 20___ in consideration of the sum of Ten Dollars ($10.00) and other valuable consideration, the receipt and sufficiency of which are hereby acknowledged, does or do hereby Grant, Bargain, and Sell to THE CITY OF COLUMBIA, MISSOURI, a municipal corporation, herein City or Grantee (Grantee's mailing address is: P.O. Box 6015, Columbia, MO 65205), its successors and assigns, both individually and as Trustee for the use and benefit of the "Benefited Parties" described below herein, hereinafter called Grantees, a utility easement with the right, privilege and authority to erect, construct, install, lay, operate, survey, inspect, maintain, repair, rebuild, replace and remove utility lines and utility facilities, including but not limited to water mains, power transmission lines, sanitary sewer lines and all other public utilities, and all necessary appurtenances to make said utilities complete and usable, over, under, across, and upon the following described real estate situated in Boone County, Missouri, to-wit:

Project: Scott Boulevard Phase III (32-02-02)

Parcel: 16-700-32-00-001.03

LEGAL DESCRIPTION

A four (4) sided parcel of land over the east side of a tract of land described in a deed of correction in Book 1867 at Page 30, said tract also being Tract 1A of the survey as recorded in Book 866 at Page 187, both of the Boone County Records; situate in the southeast quarter (1/4) of the northeast (1/4) of Section 32, Township 48 North, Range 13 West in Boone County, Missouri; said parcel being described as follows:

Starting at the southeast corner of said tract, said corner also being the east quarter (1/4) corner of said section; thence along the south line of said tract, said line also being the east-west quarter (1/4) section line of said section, N.84°08'40"W., 37.41 feet to the POINT OF BEGINNING at the southwest corner of the permanent street easement granted this date; thence continuing along said line N.84°08'40"W., 20.06 feet; thence leaving said line N.1°16'05"E., 904.91 feet to the north line of said tract; thence along said line S.87°57'25"E., 20.00 feet to the northwest corner of the permanent street easement granted this date; these along the west line of said easement S.1°16'05"W.,906.25 feet to the POINT OF BEGINNING and containing 0.42 acres inclusive of 0.11 acres of water line easement as recorded in Book 632 at Page 295 of said Boone County Records.

The "Benefited Parties" referred to above herein shall be deemed to mean any public corporation, any public entity, any public water supply district, any utility cooperative, and any utility

EXHIBIT "F"

company regulated by the Missouri Public Service Commission, and said Benefited Parties shall have the right to use the easement area for the aforesaid purposes.

The parties agree that in the event the City or a Benefited Party installs utility lines or utility facilities in the above described easement area, such installation shall not materially interfere with any preexisting utility lines or utility facilities installed in the easement area by the City or a Benefited Party and that the provisions of this paragraph may be enforced by proceedings in law or in equity, or both, and in any said legal proceedings the prevailing party shall have the right to recover from the other party or parties all reasonable litigation expenses, including a reasonable attorney fee.

The parties agree that this easement may not be terminated or amended without the prior written consent of THE CITY OF COLUMBIA, MISSOURI and each Benefited Party which has any utility lines or utility facilities located in the easement area at the time of the proposed termination or amendment.

Grantor agrees that it will not erect any building or structure on the easement area or permit the installation of any obstruction on the easement area which will interfere with the construction, placement, operation and maintenance of utility lines and facilities in the easement area.

THE CITY OF COLUMBIA, MISSOURI and/or any Benefited Party shall have the right to trim, clear, cut and remove from the easement area any tree, brush, shrub, plant or other object of any kind which in the reasonable judgment of said party may interfere with the installation and/or maintenance of utility lines and utility facilities in the easement area.

IN WITNESS WHEREOF, the said Grantor(s) has or have hereunder set his or her or their hand(s) this _____ day of _____, 20___.

_____ _____

Joseph L. Kurzejeski Elda L. Kurzejeski

STATE OF MISSOURI)
) SS.
COUNTY OF BOONE)

On this _____ day of _____, 20__ before me personally appeared Joseph L. Kurzejeski and Elda L. Kurzejeski, Trustees of the Kurzejeski Family Revocable Living Trust, to me known to be the person or persons described in and who executed the foregoing instrument, and acknowledged that he or she or they executed the same as his or her or their free act and deed for the purposes therein stated.

IN TESTIMONY WHEREOF, I have hereunto set my hand and affixed my official seal at my office in _____, Missouri, the day and year first above written.

_____

Notary Public

EASEMENT FOR UTILITY PURPOSES
(BY INDIVIDUALS)

KNOW ALL PERSONS BY THESE PRESENTS:

THAT THE UNDERSIGNED, Carlton P. McGrath and Cheryl F. McGrath, husband and wife, of Boone County, Missouri, hereinafter referred to as Grantor(s), on this _____ day of _____, 2015 in consideration of the sum of Ten Dollars ($10.00) and other valuable consideration, the receipt and sufficiency of which are hereby acknowledged, does or do hereby Grant, Bargain, and Sell to THE CITY OF COLUMBIA, MISSOURI, a municipal corporation, herein City or Grantee (Grantee's mailing address is: P.O. Box 6015, Columbia, MO 65205), its successors and assigns, both individually and as Trustee for the use and benefit of the "Benefited Parties" described below herein, hereinafter called Grantees, a utility easement with the right, privilege and authority to erect, construct, install, lay, operate, survey, inspect, maintain, repair, rebuild, replace and remove utility lines and utility facilities, including but not limited to water mains, power transmission lines, sanitary sewer lines and all other public utilities, and all necessary appurtenances to make said utilities complete and usable, over, under, across, and upon the following described real estate situated in Boone County, Missouri, to-wit:

Project: Scott Boulevard Phase III (32-02-02)

Parcel: 16-700-32-00-013.00

LEGAL DESCRIPTION:

A four (4) sided parcel of land across the east part of a tract of land described in a quit claim deed in Book 4333 at Page 88 of the Boone County Records; situate in the southeast quarter (1/4) of the southeast (1/4) of Section 32, Township 48 North, Range 13 West in Boone County, Missouri; said parcel being described as follows:

Starting at the northeast corner of said tract; thence along the north line of said tract N.83°50'15"W., 35.44 feet to the northwest corner of the permanent street easement granted this date; thence along the west line of said easement S.1°52'20"W., 199.86 feet to the southwest corner of said easement on the south line of said tract; thence along said line N.83°50'15"W., 20.06 feet; thence leaving said line N.1°52'20"E., 199.86 feet to the north line of said tract; thence along said line S.83°50'15"E., 20.06 feet to the POINT OF BEGINNING and containing 3,997 square feet inclusive of 1,857 square feet of water line easement as recorded in Book 362 at Page 169 of said Boone County Records.

The "Benefited Parties" referred to above herein shall be deemed to mean any public corporation, any public entity, any public water supply district, any utility cooperative, and any utility company regulated by the Missouri Public Service Commission, and said Benefited Parties shall have the right to use the easement area for the aforesaid purposes.

EXHIBIT "G"

The parties agree that in the event the City or a Benefited Party installs utility lines or utility facilities in the above described easement area, such installation shall not materially interfere with any preexisting utility lines or utility facilities installed in the easement area by the City or a Benefited Party and that the provisions of this paragraph may be enforced by proceedings in law or in equity, or both, and in any said legal proceedings the prevailing party shall have the right to recover from the other party or parties all reasonable litigation expenses, including a reasonable attorney fee.

The parties agree that this easement may not be terminated or amended without the prior written consent of THE CITY OF COLUMBIA, MISSOURI and each Benefited Party which has any utility lines or utility facilities located in the easement area at the time of the proposed termination or amendment.

Grantor agrees that it will not erect any building or structure on the easement area or permit the installation of any obstruction on the easement area which will interfere with the construction, placement, operation and maintenance of utility lines and facilities in the easement area.

THE CITY OF COLUMBIA, MISSOURI and/or any Benefited Party shall have the right to trim, clear, cut and remove from the easement area any tree, brush, shrub, plant or other object of any kind which in the reasonable judgment of said party may interfere with the installation and/or maintenance of utility lines and utility facilities in the easement area.

IN WITNESS WHEREOF, the said Grantor(s) has or have hereunder set his or her or their hand(s) this _____ day of _____, 2015.

_____ _____

Carlton P. McGrath Cheryl F. McGrath

STATE OF MISSOURI)
) SS.
COUNTY OF BOONE)

On this _____ day of _____, 2015 before me personally appeared Carlton P. McGrath and Cheryl F. McGrath, husband and wife, to me known to be the person or persons described in and who executed the foregoing instrument, and acknowledged that he or she or they executed the same as his or her or their free act and deed for the purposes therein stated.

IN TESTIMONY WHEREOF, I have hereunto set my hand and affixed my official seal at my office in _____, Missouri, the day and year first above written.

_____

Notary Public

EASEMENT FOR UTILITY PURPOSES
(BY INDIVIDUALS)

KNOW ALL PERSONS BY THESE PRESENTS:

THAT THE UNDERSIGNED, Marjorie McGrath, Trustee of the Marjorie McGrath Revocable Intervivos Trust dated August 8, 1996, of Boone County, Missouri, hereinafter referred to as Grantor(s), on this _____ day of _____, 20___ in consideration of the sum of Ten Dollars ($10.00) and other valuable consideration, the receipt and sufficiency of which are hereby acknowledged, does or do hereby Grant, Bargain, and Sell to THE CITY OF COLUMBIA, MISSOURI, a municipal corporation, herein City or Grantee (Grantee's mailing address is: P.O. Box 6015, Columbia, MO 65205), its successors and assigns, both individually and as Trustee for the use and benefit of the "Benefited Parties" described below herein, hereinafter called Grantees, a utility easement with the right, privilege and authority to erect, construct, install, lay, operate, survey, inspect, maintain, repair, rebuild, replace and remove utility lines and utility facilities, including but not limited to water mains, power transmission lines, sanitary sewer lines and all other public utilities, and all necessary appurtenances to make said utilities complete and usable, over, under, across, and upon the following described real estate situated in Boone County, Missouri, to-wit:

Project: Scott Boulevard Phase III (32-02-02)

Parcel: 16-700-32-00-012.00

LEGAL DESCRIPTION:

A four (4) sided parcel of land across the east part of part of a tract of land described in a trustees deed in Book 3870 at Page 71 of the Boone County Records; situate in the southeast quarter (1/4) of the southeast (1/4) of Section 32, Township 48 North, Range 13 West in Boone County, Missouri; said parcel being described as follows:

Starting at the northeast corner of said tract; thence along the north line of said tract N.83°50'15"W., 36.92 feet to the POINT OF BEGINNING at the northwest corner of the permanent street easement granted this date; thence along the west line of said easement S.1°52'20"W., 199.86 feet to the southwest corner of said easement on the south line of said tract; thence along said line N.83°50'15"W., 20.06 feet; thence leaving said line N.1°52'20"E., 199.86 feet to the north line of said tract; thence along said line S.83°50'15"E., 20.06 feet to the POINT OF BEGINNING and containing 3,997 square feet inclusive of 1,824 square feet of existing water line easement as recorded in Book 362 at Page 169 of said Boone County Records.

EXHIBIT "H"

The "Benefited Parties" referred to above herein shall be deemed to mean any public corporation, any public entity, any public water supply district, any utility cooperative, and any utility company regulated by the Missouri Public Service Commission, and said Benefited Parties shall have the right to use the easement area for the aforesaid purposes.

The parties agree that in the event the City or a Benefited Party installs utility lines or utility facilities in the above described easement area, such installation shall not materially interfere with any preexisting utility lines or utility facilities installed in the easement area by the City or a Benefited Party and that the provisions of this paragraph may be enforced by proceedings in law or in equity, or both, and in any said legal proceedings the prevailing party shall have the right to recover from the other party or parties all reasonable litigation expenses, including a reasonable attorney fee.

The parties agree that this easement may not be terminated or amended without the prior written consent of THE CITY OF COLUMBIA, MISSOURI and each Benefited Party which has any utility lines or utility facilities located in the easement area at the time of the proposed termination or amendment.

Grantor agrees that it will not erect any building or structure on the easement area or permit the installation of any obstruction on the easement area which will interfere with the construction, placement, operation and maintenance of utility lines and facilities in the easement area.

THE CITY OF COLUMBIA, MISSOURI and/or any Benefited Party shall have the right to trim, clear, cut and remove from the easement area any tree, brush, shrub, plant or other object of any kind which in the reasonable judgment of said party may interfere with the installation and/or maintenance of utility lines and utility facilities in the easement area.

IN WITNESS WHEREOF, the said Grantor(s) has or have hereunder set his or her or their hand(s) this _____ day of _____, 20___.

_____
Marjorie McGrath, Trustee

STATE OF MISSOURI)
) SS.
COUNTY OF BOONE)

On this _____ day of _____, 20__ before me personally appeared Marjorie McGrath, Trustee of the Marjorie McGrath Revocable Intervivos Trust dated August 8, 1996, to me known to be the person or persons described in and who executed the foregoing instrument, and acknowledged that he or she or they executed the same as his or her or their free act and deed for the purposes therein stated.

IN TESTIMONY WHEREOF, I have hereunto set my hand and affixed my official seal at my office in _____, Missouri, the day and year first above written.

_____
Notary Public

EASEMENT FOR UTILITY PURPOSES
(BY INDIVIDUALS)

KNOW ALL PERSONS BY THESE PRESENTS:

THAT THE UNDERSIGNED, Carlton P. McGrath and Cheryl F. McGrath, husband and wife, of Boone County, Missouri, hereinafter referred to as Grantor(s), on this _____ day of _____, 2015 in consideration of the sum of Ten Dollars ($10.00) and other valuable consideration, the receipt and sufficiency of which are hereby acknowledged, does or do hereby Grant, Bargain, and Sell to THE CITY OF COLUMBIA, MISSOURI, a municipal corporation, herein City or Grantee (Grantee's mailing address is: P.O. Box 6015, Columbia, MO 65205), its successors and assigns, both individually and as Trustee for the use and benefit of the "Benefited Parties" described below herein, hereinafter called Grantees, a utility easement with the right, privilege and authority to erect, construct, install, lay, operate, survey, inspect, maintain, repair, rebuild, replace and remove utility lines and utility facilities, including but not limited to water mains, power transmission lines, sanitary sewer lines and all other public utilities, and all necessary appurtenances to make said utilities complete and usable, over, under, across, and upon the following described real estate situated in Boone County, Missouri, to-wit:

Project: Scott Boulevard Phase III (32-02-02)

Parcel: 16-700-32-00-011.00

LEGAL DESCRIPTION:

An irregular shaped parcel of land across the east part of a tract of land described in a quit claim deed in Book 4333 at Page 87 of the Boone County Records; situate in the southeast quarter (1/4) of the southeast (1/4) of Section 32, Township 48 North, Range 13 West in Boone County, Missouri; said parcel being described as follows:

Starting at the northeast corner of said tract; thence along the north line of said tract N.83°50'15"W., 38.40 feet to the POINT OF BEGINNING at the northwest corner of the permanent street easement granted this date; thence along the west line of said easement S.1°52'20"W., 172.89 feet: thence S.1°29'40"W., 26.99 feet to the southwest corner of said easement on the south line of said tract; thence along said line N.83°50'15"W., 20.08 feet; thence leaving said line N.1°31'10"E., 25.49 feet; thence N.1°52'20"E., 174.39 feet to the north line of said tract; thence along said line S.83°50'15"E., 20.06 feet to the POINT OF BEGINNING and containing 3,998 square feet inclusive of 1,921 square feet of water line easement as recorded in Book 362 at Page 169 of said Boone County Records.

The "Benefited Parties" referred to above herein shall be deemed to mean any public corporation, any public entity, any public water supply district, any utility cooperative, and any utility company regulated by the Missouri Public Service Commission, and said Benefited Parties shall have the right to use the easement area for the aforesaid purposes.

EXHIBIT "I"

The parties agree that in the event the City or a Benefited Party installs utility lines or utility facilities in the above described easement area, such installation shall not materially interfere with any preexisting utility lines or utility facilities installed in the easement area by the City or a Benefited Party and that the provisions of this paragraph may be enforced by proceedings in law or in equity, or both, and in any said legal proceedings the prevailing party shall have the right to recover from the other party or parties all reasonable litigation expenses, including a reasonable attorney fee.

The parties agree that this easement may not be terminated or amended without the prior written consent of THE CITY OF COLUMBIA, MISSOURI and each Benefited Party which has any utility lines or utility facilities located in the easement area at the time of the proposed termination or amendment.

Grantor agrees that it will not erect any building or structure on the easement area or permit the installation of any obstruction on the easement area which will interfere with the construction, placement, operation and maintenance of utility lines and facilities in the easement area.

THE CITY OF COLUMBIA, MISSOURI and/or any Benefited Party shall have the right to trim, clear, cut and remove from the easement area any tree, brush, shrub, plant or other object of any kind which in the reasonable judgment of said party may interfere with the installation and/or maintenance of utility lines and utility facilities in the easement area.

IN WITNESS WHEREOF, the said Grantor(s) has or have hereunder set his or her or their hand(s) this _____ day of _____, 2015.

_____ _____

Carlton P. McGrath Cheryl F. McGrath

STATE OF MISSOURI)
) SS.
COUNTY OF_____)

On this _____ day of _____, 2015 before me personally appeared Carlton P. McGrath and Cheryl F. McGrath, husband and wife, to me known to be the person or persons described in and who executed the foregoing instrument, and acknowledged that he or she or they executed the same as his or her or their free act and deed for the purposes therein stated.

IN TESTIMONY WHEREOF, I have hereunto set my hand and affixed my official seal at my office in _____, Missouri, the day and year first above written.

_____

Notary Public

City of Columbia
701 East Broadway, Columbia, Missouri 65201

SUPPORTING DOCUMENTS INCLUDED WITH THIS AGENDA ITEM ARE AS FOLLOWS:

Map

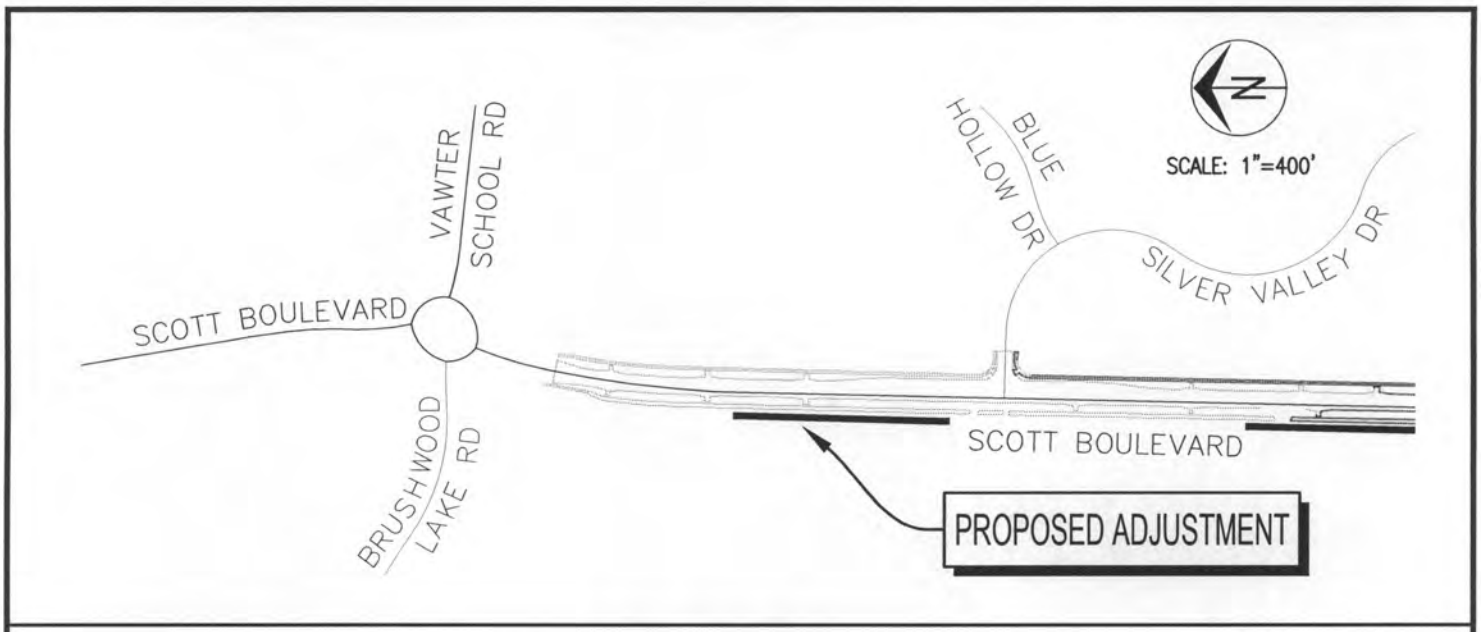

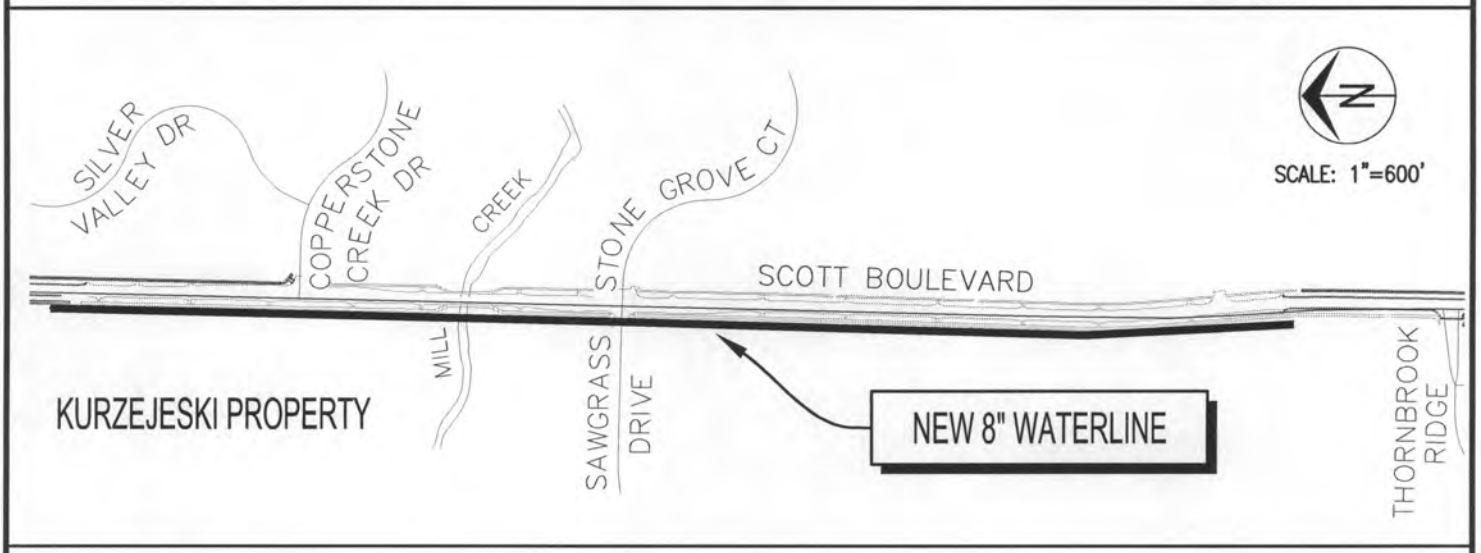

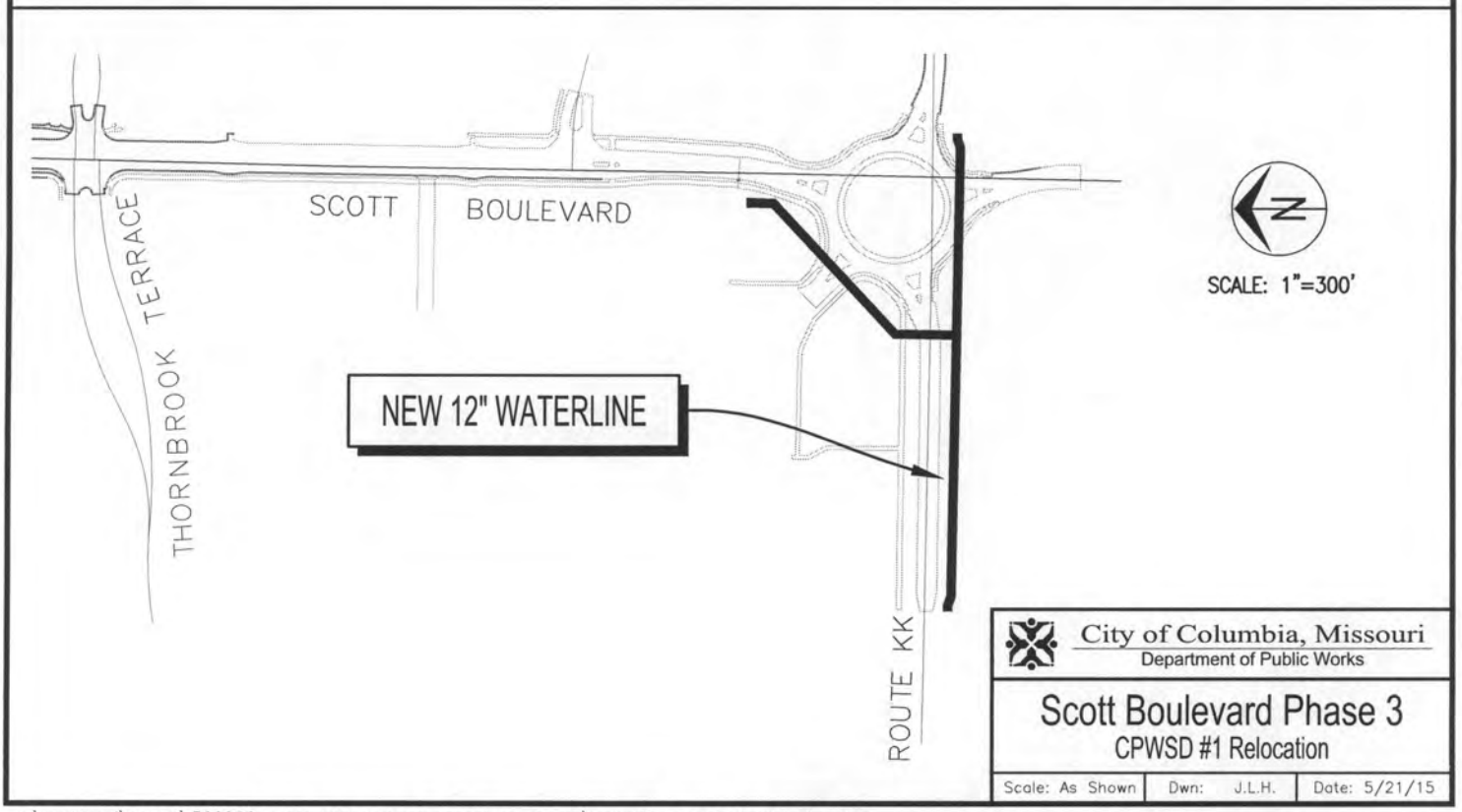

City of Columbia, Missouri
Department of Public Works

Scott Boulevard Phase 3
CPWSD #1 Relocation

Scale: As Shown	Dwn: J.L.H.	Date: 5/21/15

o:\caddproj\street\320202 scott blvd-vawter school to rte kk\cpwsd1_proposed_waterline.dwg