Source: City Manager

Agenda Item No: Supplemental Information

To: City Council
From: City Manager and Staff

Council Meeting Date: Sep 16, 2013

Re: EEC recommendations for residential building codes corrected letter- Supplemental information for Council

EXECUTIVE SUMMARY:

An incorrect letter from the Environment and Energy Commission was mistakenly introduced at the September 3 , 2013 City Council meeting. The introduced letter was submitted as supplemental information for Agenda items B239-13 through B246-13. The corrected letter, dated April 17, 2013 is attached here as supplemental information.

DISCUSSION:

The Environment and Energy Commission (EEC) was requested by City Council to review changes to the building code in regards to energy efficiency. The commission originally submitted their recommendations to City staff in a letter dated January 17, 2013. Upon further review of their recommendations, the EEC re-submitted their letter to staff and City Council on April 17, 2013. The January 17, 2013 letter to staff was mistakenly submitted as supplemental information to Agenda items B239-13 through B246-13 at the September 3, 2013 City Council meeting.

The recommendations from the April 17, 2013 letter are the recommendations Council heard at their June 17 pre-Council meeting. Those recommendations are to adopt the 2012 energy code as written or accept the three compromises as recommended by the EEC. Those compromises are:

1. The amount of attic insulation
2. The amount of wall insulation
3. Perimeter foundation insulation

Staff apologizes for the confusion and have attached the correct letter, which has been seen by the City Council before, for clarification.

FISCAL IMPACT:

None

VISION IMPACT:
http://www.gocolumbiamo.com/Council/Meetings/visionimpact.php

By adopting the 2012 energy code, newer homes will be more energy efficient

SUGGESTED COUNCIL ACTIONS:

The Environment and Energy Commission requests that Council amend the proposed changes to building codes with the recommendations from the EEC.

FISCAL and VISION NOTES:					
City Fiscal Impact Enter all that apply		**Program Impact**		**Mandates**	
City's current net FY cost	$0.00	New Program/ Agency?		Federal or State mandated?	
Amount of funds already appropriated	$0.00	Duplicates/Expands an existing program?		**Vision Implementation impact**	
Amount of budget amendment needed	$0.00	Fiscal Impact on any local political subdivision?		Enter all that apply: Refer to Web site	
Estimated 2 year net costs:		**Resources Required**		Vision Impact?	Choose One
One Time	$0.00	Requires add'l FTE Personnel?		Primary Vision, Strategy and/or Goal Item #	
Operating/ Ongoing	$0.00	Requires add'l facilities?		Secondary Vision, Strategy and/or Goal Item #	
		Requires add'l capital equipment?		Fiscal year implementation Task #	

ENVIRONMENT & ENERGY COMMISSION

City of Columbia & County of Boone

City Hall, Conference Room 1A

April 17, 2013

Mayor McDavid and Council Members,

The Environment & Energy Commission has reviewed the 2012 Energy Code (Chapter 11 of the International Residential Code), and the recommendations of the Building Code Commission. The BCCC has done extensive research into the energy conservation sections of the residential code, and deserves recognition for this effort. The recommendations of the EEC are as follows:

Insulation of hot water piping: The EEC agrees with the BCCC's proposal of eliminating hot water insulation requirements except in the case of hot water circulating pump piping.

Wood frame wall insulation: The 2012 Energy Code requires R20 or R13+5 (R13 batt and R5 cladding). We agree with the BCCC that this new insulation requirement be kept in force. The BCCC has proposed an exception allowing high density batts to substitute for exterior continuous insulation cladding, however this does not meet the letter of *R402.1.3 U-Factor Alternative*. The EEC does not agree with the BCCC proposal allowing high density batts to substitute for continuous insulation cladding.

Termite exemption for slab-on-grade and foundation insulation: The EEC recommends the retention of section *R402.2.9 Slab-on-grade-floor* insulation requirement in the 2012 International Energy Conservation Code. We suggest using standard termite barrier details which has been allowed as an option by City Authorities for some time. This is not in agreement with the BCCC recommendations for an exemption.

Ceiling or Attic R-value: The 2012 Code recommends an increase in Attic insulation from R-38 to R-49, and in the case of an "Energy Band" truss, reduction to R-38 is allowed. The EEC Recommends that this requirement, which may result in reduced mechanical equipment size if properly implemented, will be cost effective. Contractors using proper "Manual J" Calculations will reduce equipment size, thus reduce overall building cost and energy use compared to the old Code. This reduced HVAC equipment size can directly reduce electric utility demand charges, reaping benefits to the City Utility as well as to the consumer. This is not in agreement with BCCC recommendations which propose to keep 2009 insulation requirements.

Air leakage: The 2012 Code requires a blower door test on all new houses to determine air leakage. The EEC would agree with BCCC that a relaxed standard which requires a visual inspection of air leakage control measures during construction is feasible. The blower door test should be allowed as an option at the discretion of the Building Inspector in questionable or disputed cases.

Duct leakage: The 2012 Code requires a duct pressure test on all new houses to determine duct leakage. Mechanical contractors are more aware of leakage requirements, and testimony shows they are taking care to seal ductwork. The EEC would agree with the BCCC that a relaxed standard which requires a visual inspection of duct leakage control measures during construction be allowed. The duct pressure test should be allowed as an option at the discretion of the Building Inspector in questionable or disputed cases.

Outdoor air duct: The EEC agrees with the BCCC recommendation of a single outside air duct, with insect screen and damper, routed to the furnace return air intake to satisfy Section R303 and M1507 Mechanical Ventilation requirements. This duct should be 4" for houses less than 1500 square feet, 6" for houses less than 2400 square feet, and 8" for larger houses. If there are multiple furnaces, the requirements may be applied to the area served by the furnace, or to one of the multiple furnaces as long as the furnace is properly sized to handle the additional heating or cooling load imposed by the outside air. The duct should be placed as to discharge into the return air filter, to reduce allergens or dust from outdoors.

Building cavities as return air The EEC agrees with the BCCC that building cavities may be used as return air cavities without full duct lining, as long as leakage to outside air, attics, or unconditioned spaces is prevented by visually inspection.

High efficacy lamps: The EEC agrees with the BCCC recommending that the 2012 requirement that 75 percent of the *lamps* in light fixtures be high efficacy type, be changed to read 75 percent of the *fixtures shall* be high efficacy. This allows a few multiple bulb fixtures, such as candelabras, to be conventional bulbs, while retaining the requirement for high efficacy bulbs in most areas.

Programmable thermostats: The 2012 Code specifies that the initial heating setpoint shall be 70F and the cooling setpoint be 78F. The EEC agrees with the BCCC in recommending that this paragraph be changed from *shall* to *should,* which makes the requirement non-mandatory.

Respectfully Yours,

By: _____

Signature

Lawrence Lile,

Vice Chair and Acting Chair

Environment and Energy Commission

Introduced by _____

First Reading _____ Second Reading _____

Ordinance No. _____ Council Bill No. _____B 245-13_____

AN ORDINANCE

repealing Article IX of Chapter 6 of the City Code relating to the 2009 Edition of the International Fuel Gas Code, and enacting in lieu thereof a new Article IX adopting the 2012 Edition of the International Fuel Gas Code; and fixing the time when this ordinance shall become effective.

BE IT ORDAINED BY THE COUNCIL OF THE CITY OF COLUMBIA, MISSOURI, AS FOLLOWS:

SECTION 1. Article IX of Chapter 6 of the Code of Ordinances, City of Columbia, Missouri, relating to the 2009 Edition of the International Fuel Gas Code, is hereby repealed and in lieu thereof a new Article IX, relating to the 2012 Edition of the International Fuel Gas Code, is hereby enacted reading in words and figures as follows:

CHAPTER 6. BUILDINGS AND BUILDING REGULATIONS

. . .

ARTICLE IX. FUEL GAS CODE

Sec. 6-230. Adopted.

The 2012 Edition of the International Fuel Gas Code, published by the International Code Council, Inc., including Appendices A, B and C, one copy of which has been on file with the city clerk for a period of ninety (90) days prior to the adoption of this article, is hereby adopted by reference and made a part of the Code of Ordinances, City of Columbia, Missouri as fully as if set forth in its entirety. At least one (1) copy of the 2012 Edition of the International Fuel Gas Code shall remain on file in the office of the city clerk and shall be kept available for public use, inspection and examination.

Sec. 6-231. - Amendments.

The code adopted by this article is hereby amended by substituting the following sections in lieu of those sections with corresponding numbers in the code, or, where there is no corresponding section in the code, the following sections shall be enacted as additions to the code:

101.1 Title. These regulations shall be known as the Fuel Gas Code of the City of Columbia, Missouri, hereinafter referred to as "this code."

101.3.1 Appendices A, B, and C are hereby adopted as published.

101.6 Unlawful. It shall be unlawful for any person to engage in the installation, alteration or repair of any gas piping systems, fuel gas utilization equipment, gaseous hydrogen systems and related accessories, appliances or components in or on any building, structure or premises within the corporate limits of the City of Columbia, Missouri, unless issued a certificate of competency by the board of mechanical examiners or the board of plumbing examiners.

Section 103 DEPARTMENT OF COMMUNITY DEVELOPMENT - DIVISION OF BUILDING AND SITE DEVELOPMENT

103.1 Director. The administration and enforcement of this ordinance shall be the duty of the director of community development , who is designated the code official for purposes of this code. The code official is hereby authorized to take such action as may be reasonably necessary to enforce the provisions of this code. Such persons may be appointed and authorized as assistants or representatives of the director as may be necessary to carry out the provisions of this code.

103.2 Appointment. Delete.

103.3 Deputies. Delete.

103.4 Liability: Any officer or employee charged with the enforcement of this code, while acting on behalf of the city, shall not thereby render such individual liable personally, and is hereby relieved from all personal liability for any damage accruing to persons or property as a result of any act performed in the discharge of official duties. Any suit instituted against any officer or employee because of an act performed by that officer or employee in the lawful discharge of duties and under the provisions of this code shall be defended by the legal representative of the jurisdiction until the final termination of the proceedings. The officer or employee shall not be liable for costs in any action, suit or proceeding that is instituted pursuant to the provisions of this code; and any officer or employee acting within the scope of employment and in good faith and without malice, shall be free from liability for acts performed under any of its provisions or by reason of any act or omission in the performance of official duties in connection therewith. Nothing contained herein shall be deemed a waiver of the immunities and protection afforded to the city or officers and employees pursuant to state and federal law.

103.5 Restriction of employees: An employee connected with the Department of Community Development - Division of Building and Site Development shall not be engaged in or directly or indirectly connected with the furnishing of labor, materials or appliances for

the construction, alteration or maintenance of a building, or the preparation of plans or of specifications therefore, unless such employee is the owner of the building; nor shall such employee engage in any work which conflicts with such employee's official duties or with the interest of the department.

106.1.1 Permit required. Application for a permit shall be made by a licensed master mechanical HVACR mechanic, or a licensed master plumber, except as provided in section 106.2. Fuel gas permits may be issued to the general contractor on behalf of the master plumber or master mechanic for new one and two family dwellings and building alteration or building additions for one and two family dwellings. All fuel gas work must be performed by a plumber, or mechanic licensed by the City of Columbia, or as allowed by ordinance. Any permit required by this code may be issued to any person to do any work regulated by this code in a single-family dwelling used exclusively for living purposes, including the usual accessory buildings and quarters in connection with such buildings, provided the person is a bona fide owner of such dwelling and that the dwelling will be occupied by the owner, and that the owner shall personally purchase all material and perform all labor in connection therewith. Any person obtaining a permit under this section shall not be issued another permit within two years.

106.6.2 Fee schedule. The fees for all fuel gas work covered by this code shall be as indicated in the following schedule:

$0.00 to $1,000.00 .....$10.80
$1,000.01 to $5,000.00 ..... $10.80 plus $2.70 per thousand over $1,000.00
$5,000.01 to $10,000.00 ..... $21.60 plus $2.16 per thousand over $5,000.00
$10,000.01 to $20,000.00 ..... $32.40 plus $1.62 per thousand over $10,000.00
Over $20,000 ..... $48.60 plus $1.08 per thousand over $20,000.00

106.6.3 Fee refunds. The code official shall authorize the refunding of fees as follows:

1. The full amount of any fee paid hereunder which was erroneously paid or collected.

2. Not more than seventy-five (75) percent of the permit fee paid when no work has been done under a permit issued in accordance with this code.

3. Delete in its entirety.

The code official shall not authorize the refunding of any fee paid, except upon written application filed by the original permittee not later than one hundred eighty days (180) days after the date of fee payment.

108.4 Violation Penalties. Any person who shall violate a provision of this code or shall fail to comply with any of the requirements thereof shall be guilty of a misdemeanor and upon conviction thereof shall be punished by a fine of not more than one thousand dollars

($1,000.00) or by imprisonment not exceeding one (1) year, or by both such fine and imprisonment. Each day that a violation continues shall be deemed a separate offense.

108.5 Stop work orders. Upon notice from the code official that work is being done contrary to the provisions of this code or in a dangerous or unsafe manner, such work shall immediately cease. Such notice shall be in writing and shall be given to the owner of the property, or to the owner's agent, or to the person doing the work. The notice shall state the conditions under which work is authorized to resume. Where an emergency exists, the code official shall not be required to give a written notice prior to stopping the work. Any person who shall continue any work on the system after having been served with a stop work order, except such work as that person is directed to perform to remove a violation or unsafe condition, shall be liable to a fine of not less than one hundred dollars ($100.00) or more than one thousand dollars ($1,000.00).

109.1 Appeals. The owner of a building or structure or any person directly affected by a decision of the code official may appeal to the building construction codes commission from a decision of the official refusing to grant modifications of the provisions of this code covering the manner of installation, or materials to be used in the installation. The procedure for appeal shall be governed by Section 113.0 of the Building Code of Columbia, Missouri.

109.2 through 109.7 – Delete.

403.5.2 Copper and brass tubing. Copper tubing shall comply with standard Type K of ASTM B 88 or ASTM B 280.

Copper pipe and copper tubing shall not be allowed for fuel gas piping systems.

404.14 Piping underground beneath buildings. Add last sentence to paragraph which states: Any underground gas piping allowed by this section shall only be approved for gas that is less dense than the atmospheric pressure and shall be installed in accordance with section 404.12.1 and shall always terminate or vent to the outside.

404.14.2 Delete in its entirety

406.4.1 Test pressure. The test pressure to be used shall be not less than one and one half (1-1/2) times the proposed maximum working, but not less than 30 psig, irrespective of design pressure.

408.4 Sediment trap. Change "any length" to "three and one-half (3-1/2) inch minimum length"

SECTION 2. The repeal of Article IX of Chapter 6 of the Code of Ordinances, City of Columbia, Missouri, relating to the 2009 Edition of the International Fuel Gas Code shall not

affect any offense or act committed or done or any penalty or forfeiture incurred before the effective date of this ordinance.

SECTION 3. This ordinance shall be in full force and effect from and after October 1, 2013.

PASSED this _____ day of _____, 2013.

ATTEST:

_____ _____

City Clerk Mayor and Presiding Officer

APPROVED AS TO FORM:

_____

City Counselor

Source: Community Development - BSD

Agenda Item No:

To: City Council
From: City Manager and Staff

Council Meeting Date: Sep 3, 2013

Re: Update of Building Codes

EXECUTIVE SUMMARY:

The Building Construction Codes Commission has completed their review of the 2012 International Code Council Codes and 2011 National Electrical Code for adoption by the city. There are numerous minor changes and several major changes. The new codes provide clarity and enhance the life safety, protection of property, and energy efficiency of buildings. Among the major changes, the cost implications of the energy efficiency chapter of the residential code is the largest concern.

DISCUSSION:

Numerous meetings were held evaluating the effect of the new codes and determining what local addendums would be needed. These meetings were staffed by representatives of the Building and Site Development Division of the Community Development Department and the Fire Department.

Some of the most significant changes deal with the energy conservation requirements of the code. Staff has attached memorandums from both the BCCC and the Environment and Energy Commission (EEC). Members of the BCCC and EEC met to discuss the changes in the code. The BCCC brought forth their suggestions and the EEC agreed with all but three items. Staff supports the BCCC's recommendations on the basis that the codes are specifically designed to be minimum requirements. The EEC has made recommendations for higher standards on the broader basis of long term energy conservation.

The three differences between the BCCC and EEC recommendations are:

1. The amount of attic insulation.
2. The amount of wall insulation (changing from 2x4 framing to 2x6 framing).
3. Perimeter foundation insulation.

If the codes are to continue to be minimum standards, the recommendation of the BCCC should be adopted. Adopting the higher standards of insulation recommended by the EEC, on the other hand, would be in keeping with the City's commitment to conservation of energy resources. It is important that the new codes be adopted even if there is to be further consideration of the energy code requirements.

Below are some of the other significant changes and the BCCC's recommendations. Where no recommendations are listed, the BCCC is in favor of adopting the code as written:

International Residential Code:

1. Manufactured wood I-joists used in floor assemblies will be required to have ½" of gypsum board applied to the underside of the floor framing member. The new code requires a closer on the door between the residence and garage. The BCCC chose not to adopt this provision due to the inconvenience to the home owner.

2. Whole house mechanical ventilation is required (an exhaust fan running intermittently or continuously). The BCCC made provisions to add an exterior opening ducted to the return ductwork to provide additional natural ventilation in lieu of mechanical ventilation.
3. The BCCC has now defined that grass and landscaped areas are not walking surfaces therefore adjacent walls do not require guards.
4. A simplified wall bracing section has been added which is applicable to how homes are constructed in Columbia and will simplify construction and inspection of braced walls.
5. The 2012 code requires additional hold downs are required for long span rafters and trusses.
6. Continuous sidewall flashing is now acceptable in lieu of step flashing only.
7. The 2012 code requires a drip edge is now required at roofs.
8. The BCCC has amended the code so that the use of purple primer on waste and vent piping obviates the need for testing.
9. The BCCC decided to delete the requirement for Arc Fault Circuit Interrupters in one and two family dwellings.
10. The BCCC amended the requirement for sanitary sewer backwater valves that the waste piping does not need to be separated based on the flood rim of the fixture.
11. The BCCC has established a maximum number of receptacles based on the circuit breaker amperage. This simplifies the code requirements.
12. The supplemental electrode (additional grounding rod) requirement was deleted by the BCCC.

International Building Code:

1. The 2012 code more clearly defines different types of care facilities.
2. Children's structures (playgrounds) are more broadly regulated.
3. The area of furniture manufacturing and sales where a sprinkler system is required is now defined. The BCCC has accepted the code change and removed our current amendment.
4. Basements with walls or partitions must be sprinklered.
5. Educational occupancies are required to have an Emergency Voice/Alarm Communication System (EV/ACS). The BCCC recommended this requirement only apply to occupancies over 75 people.
6. Reduced exit widths are allowable for buildings equipped with EV/ACS.
7. Carbon monoxide alarms are now required in buildings with residential or institutional occupancies that have fuel burning appliances.
8. Exits may now be arranged to serve a portion of a story instead of the entire story.
9. Retained the reference to the 2009 International Energy Conservation code due to the complexity of the 2012 IECC and the fact that there is no software that meets the 2012 IECC requirements.
10. Firestop system third party inspections are now mandatory in risk category III or IV buildings.
11. No thermal barrier is required on the floor side of a structural insulated panel system floor.
12. Foam plastic meeting certain requirements may be used in plenums.
13. Toilet facilities are no longer required in parking garages.
14. Chapter 34 provisions take precedence over other codes. The BCCC has included an amendment which further clarifies which other codes are applicable.
15. The previous amendment regarding retaining walls has been removed as it is adequately addressed by the code book.

Other changes include the number of members for a quorum and the ability of alternates to sit on the commission for any absent member.

FISCAL IMPACT:

None.

VISION IMPACT:
http://www.gocolumbiamo.com/Council/Meetings/visionimpact.php

By adopting the 2012 ICC Codes, new homes will be more energy efficient.

SUGGESTED COUNCIL ACTIONS:

Passage of the ordinances.

FISCAL and VISION NOTES:					
City Fiscal Impact Enter all that apply		**Program Impact**		**Mandates**	
City's current net FY cost	$0.00	New Program/Agency?	No	Federal or State mandated?	No
Amount of funds already appropriated	$0.00	Duplicates/Epands an existing program?	No	**Vision Implementation impact**	
Amount of budget amendment needed	$0.00	Fiscal Impact on any local political subdivision?	No	Enter all that apply: Refer to Web site	
Estimated 2 year net costs:		**Resources Required**		Vision Impact?	Yes
One Time	$0.00	Requires add'l FTE Personnel?	No	Primary Vision, Strategy and/or Goal Item #	9.3.3
Operating/Ongoing	$0.00	Requires add'l facilities?	No	Secondary Vision, Strategy and/or Goal Item #	
		Requires add'l capital equipment?	No	Fiscal year implementation Task #	

Significant changes from the 2009 to 2012 IRC energy code:

Background:

The BCCC spent eight weeks reviewing the energy code portion of the IRC, far longer than they spent on any other portion of the code. During this period they sought the advice of several experts including:

Terry Freeman, Energy Services Supervisor, Water & Light
Fred Malicoat, P.E., Malicoat-Winslow Engineers (chairman of the BCCC)
Guy Ford, Missouri Insulation Supply
Dan Riepe, Home Performance Experts

The committee also reviewed the following documents:

- North Carolina 2012 Energy Code
- BCAP - Kansas City Residents Buying 2012 IECC Homes Will Save Thousands
- USDoE – Missouri Energy and Cost Savings
- BCAP - Illinois – Your Home, More Affordable with the 2012 IECC
- Alliance for Environmental Sustainability – Comparing IECC in Illinois to Above-Code Programs
- BCAP - Local Energy Code Action Kit for Municipalities in Missouri
- Texas A&M University Energy Systems Laboratory – A Comparison of Building Energy Code Stringency: 2009 IRC Versus 2012 IRC for Single-Family Residences in Texas
- Midwest Energy Efficiency Alliance – 2012 International Energy Conservation Code (Residential)
- Instructions for the Residential Building Data Collection Checklist 2012 IECC – Residential Provisions
- Carroll County Maryland – 2012 IECC Residential Energy Efficiency Code Requirement Flow Chart
- USDoE – Residential Code Change Proposals for the 2015 IECC
- Energy Efficient Codes Coalition – Estimate of Energy and Cost Savings from Proposed IECC Code Changes for 2012
- USDoE – Guide to the Changes between the 2009 and 2012 International Energy Conservation Code
- Testimony Regarding Montgomery County (MD) Department of Permitting Services Proposal to Adopt the 2012 International Residential and Energy Conservation Codes
- USDoE – Air Leakage Guide
- Association of Professional Energy Consultants – Measuring the Baseline Compliance Rate for Residential and Non-Residential Buildings in Illinois Against the 2009 International Energy Conservation Code
- BCAP – True Cost of the 2009 International Energy Conservation Code

The committee members who attended included:

John Page, Owner, J-Bar Construction
Fred Malicoat, P.E., Owner, Malicoat-Winslow Engineers
Kas Carlson, Owner, C&C Construction
Jay Creasy, Benchmark Testing and Inspections
Doug Muzzy, Owner, Muzzy Builders
David Weber, P.E., Allstate Consultants
Phil Clithero, Kliethermes Custom Homes
Dan McCray, McCray Builders

Others in regular attendance included:

David Forward, Chief Building Inspector, Boone County
Phil Teeple, P.E., Building Regulations Supervisor, City of Columbia
Stephen Adair, Building Inspector, City of Columbia
Shane Creech, P.E., Building and Site Development Manager, City of Columbia

General issues:

The 2012 code allows for a prescriptive based approach and a simulated performance alternative. In the discussions and based on the APEC report, the way to higher compliance is thru having an easy to understand prescriptive compliance option. The BCCC has drafted a one page section of a house that shows what insulation goes where and other important energy considerations. This is based on work done by North Carolina. When dealing with a large number of builders of various size and complexity, the KISS (keep it simple stupid) method should be adopted to achieve a high rate of compliance.

The simulated performance option will still be available however the APEC study showed that both the modelers and code officials did not properly perform or understand the modeling and there were substantial compliance problems.

The Department of Energy plans to achieve 50% better energy performance over the 2006 code by changing the energy code. They are limited to heating, cooling, water heating, and lighting. However they do not get to take credit for increased efficiency of the furnace or air conditioner as it is considered an appliance which falls under the NAECA. The DoE is mandating that furnaces be 90% efficient starting in March of 2013. They are currently required to be 78% efficient. This presents its own unique challenges to the building community. All of the studies reviewed by the committee were based on 78% efficient furnaces. The result of this is the magnitude of savings shown by some studies will be reduced by the required appliance changes.

Individual Changes

Wall Insulation requirements

The code requires R-20 or R-13+5 for exterior walls. Essentially for most builders this would mean 2x6 framing for exterior walls. BCAP estimates the increased framing cost for their model 2,400 ft^2 house at $1,404. This does not include additional costs for jamb extensions for windows and doors. The usable area of the home is also reduced. The Texas A&M study found that the increased wall insulation accounted for 3.3% energy savings above the 2009 code. The structural requirements should govern and it is the BCCC's opinion that at a minimum the wall cavity should be filled with insulation. High density batts are also available for 2x4 walls though they are more expensive (approximately 2.5x more expensive than R-13 batts).

BCCC recommendation: Walls must meet an R-20, R-13+5, or be completely filled with insulation. On a 2x4 wall, the minimum R-value shall be R-15.

Slab-on-grade floors

The 2012 code requires that for slab on grade floors a minimum of 2' of R-10 insulation be provided either interior or exterior, vertically or horizontally. The code says this insulation is not required in jurisdictions designated by the building official as having a very heavy termite infestation. The committee views adding this insulation as a route and place for termites to enter buildings and live. According to the IRC we are in the "moderate to heavy" termite infestation probability portion of the country.

BCCC recommendation: Exempt the requirement for slab-on-grade floor insulation unless it is a heated floor.

Air leakage

The 2012 code requires a blower door test on all new houses to determine the rate of air leakage. Based on testimony by Terry Freeman of the Columbia Water & Light Department and Dan Riepe of Home Performance Experts, the houses currently being constructed and blower door tested meet the code requirements of less than 3 air changes per hour. Texas A&M research found that meeting the air leakage requirements would provide the most substantial cost saving of any of the changes in the 2012 code. Mr. Freeman also stated that walls of current houses are often too tight to meet fresh air requirements. The other issue with blower door tests is that they are performed when construction is near completion and addressing flaws in the building envelope would be difficult and expensive. The test alone costs approximately $250.

BCCC recommendation: Ensure the building envelope is properly sealed at the insulation inspection. Allow the blower door test if a contractor does not agree with the building inspector as an option.

Mechanical ventilation

The proposed code requires mechanical ventilation but this is not mentioned in the Energy Efficiency chapter. It is specified in Section R303 – Light, Ventilation and Heating and is further specified in Section M1507 – Mechanical Ventilation. The code requires for a 1,500 square foot, 3 bedroom home, continuous exhaust of 45 CFM. This is 64,800 ft^3 per day, or for a house with 8' ceilings, 5.4 air changes per day. The report by the Montgomery County Energy and Air Quality Advisory Committee found that the code requirements for air leakage and mechanical ventilation are at odds with each other. Montgomery County, MD is a county of approximately 1 million residents. Two Illinois jurisdictions had concerns about this as well as stated in the APEC report. The tight envelope requires forced mechanical ventilation which increases energy use compared with the natural ventilation thru the walls. Terry Freeman made similar comments. The Montgomery County Energy and Air Quality Advisory Committee proposed to keep houses naturally ventilating. The BCCC has provided a middle of the road solution because they often see combustion air intakes filled with insulation and are also concerned that if there is a fan that runs continuously or intermittently, people could shut it off.

BCCC recommendation: Provide a duct from the return air to the outside. A 4" duct for houses < 1,500 ft^2, a 6" duct for houses < 2,400 ft^2, and an 8" duct for larger houses. The duct would be insulated to prevent condensation, contain a manual damper to adjust to the required amount of fresh air, and have a screen on the exterior to stop insects and animals.

Duct tightness

The adopted code requires testing if the duct is outside of the building's thermal envelope. Nemow Insulation has done a significant amount of duct testing in Columbia. When Phil Teeple contacted Nemow, they stated they had one failure in over 90 tests. Similar sentiments were echoed by Mr. Freeman and Mr. Riepe. Boone County requires the ducts to be sealed but not tested. Ducts which have been subsequently tested in Boone County have passed. The test costs $400.

BCCC recommendation: Allow a duct test if a contractor does not agree with the visual inspection performed by the building inspector.

Building cavities as ducts/plenums

The energy code does not allow building framing cavities to be used as ducts or plenums. The mechanical code still allows this. This would require all returns to be ducted. BCAP mentions this change but only caught the ducts in floor joists, and not the returns that go up the walls to the grills and estimated this would cost $172. Ducting the returns in the wall would add substantial costs above and beyond those BCAP figured.

BCCC recommendation: Amend the energy code to conform to the mechanical code.

Hot water pipe insulation

The code has a list of 9 different instances combined with a table with pipe diameter and run length to determine if hot water pipes should be insulated. Water use in homes is on an intermittent basis. The committee based on their experience with standard and recirculating water systems did not see value in insulating the hot water pipes due to the substantial increase in costs and minimal energy savings.

BCCC recommendation: Amend the energy code to remove the hot water pipe insulation requirement.

ENVIRONMENT & ENERGY COMMISSION

City of Columbia & County of Boone

City Hall, Conference Room 1A

January 17, 2013

Mayor McDavid and Council Members,

The Environment & Energy Commission has reviewed the 2012 Energy Code (Chapter 11 of the International Residential Code), and the recommendations of the Building Code Commission. The BCCC has done extensive research into the energy conservation sections of the residential code, and deserves recognition for this effort. The recommendations of the EEC are as follows:

Insulation of hot water piping: Along with BCCC, the EEC recommends eliminating hot water insulation requirements except in the case of hot water circulating pump piping.

Wood Frame Wall Insulation: The 2012 Energy Code requires R20 or R13+5 (R13 batt and R5 cladding). We agree with the BCCC that this new insulation requirement be kept in force. The Code also allows an overall U-Factor of 0.057, roughly equivalent to an average R-value of R17.5. As this can be achieved with a high-density R-15 batt in a standard 2X4 wall, we recommend that this be an allowable method as it meets the letter of the new code.

Termite Exemption for slab-on-grade and foundation insulation: We recommend that the Columbia jurisdiction continue to exempt houses from slab and foundation insulation requirements as this is a heavy termite infestation area, and these kinds of insulation can allow termites access to walls. This practice has a long history and is consistent with BCCC recommendations.

Cieling or Attic R-Value: The 2012 Code recommends an increase in Attic insulation from R-38 to R-49, and in the case of an "Energy Band" truss, R-38 is allowed. The EEC Recommends that this requirement, which may result in reduced mechanical equipment size if properly implemented, will be cost effective. Contractors using proper "Manual J" Calculations will reduce equipment size, thus reduce overall building cost and energy use compared to the old Code. This reduced HVAC

equipment size can directly reduce electric utility demand charges, reaping benefits to the City Utility as well as to the consumer. This is not in agreement with BCCC recommendations.

Air Leakage: The 2012 Code requires a blower door test on all new houses to determine air leakage. The EEC would agree with BCCC that a relaxed standard which requires a visual inspection of air leakage control measures during construction is feasible. The blower door test should be allowed as an option at the discretion of the Building Inspector in questionable or disputed cases.

Duct Leakage: The 2012 Code requires a duct pressure test on all new houses to determine duct leakage. Mechanical contractors are more aware of leakage requirements, and testimony shows they are taking care to seal ductwork. The EEC would agree with the BCCC that a relaxed standard which requires a visual inspection of duct leakage control measures during construction be allowed. The duct pressure test should be allowed as an option at the discretion of the Building Inspector in questionable or disputed cases.

Outdoor Air Duct: The EEC agrees with the BCCC recommendation of a single outside air duct, with insect screen and damper, routed to the furnace return air intake to satisfy Section R303 and M1507 Mechanical Ventilation requirements. This duct should be 4" for houses less than 1500 square feet, 6" for houses less than 2400 square feet, and 8" for larger houses. If there are multiple furnaces, the requirements may be applied to the area served by the furnace, or to one of the multiple furnaces as long as the furnace is properly sized to handle the additional heating or cooling load imposed by the outside air. The duct should be placed as to discharge into the return air filter, to reduce allergens or dust from outdoors.

Building Cavities as Return Air The EEC agrees with the BCCC that building cavities may be used as return air cavities without full duct lining, as long as leakage to outside air, attics, or unconditioned spaces is prevented by visually inspection.

High Efficacy Lamps: The EEC recommends that the 2012 requirement that 75 percent of the *lamps* in light fixtures be high efficacy type, be changed to read 75 percent of the *fixtures* be high efficacy. This allows a few multiple bulb fixtures, such as candelabras, to be conventional bulbs, while retaining the requirement for high efficacy bulbs in most areas. Previously the 2009 amendment changed *shall* to *should* in this paragraph.

Programmable Thermostats: The 2012 Code specifies that the initial heating setpoint shall be 70F and the cooling setpoint be 78F. The EEC recommends that this paragraph be changed from *shall* to *should,* which makes the requirement non-mandatory.

Respectfully Yours,

Karl Skala,

Chair

Environment and Energy Commission

RESIDENTIAL ENERGY CODE REQUIREMENTS DIAGRAM

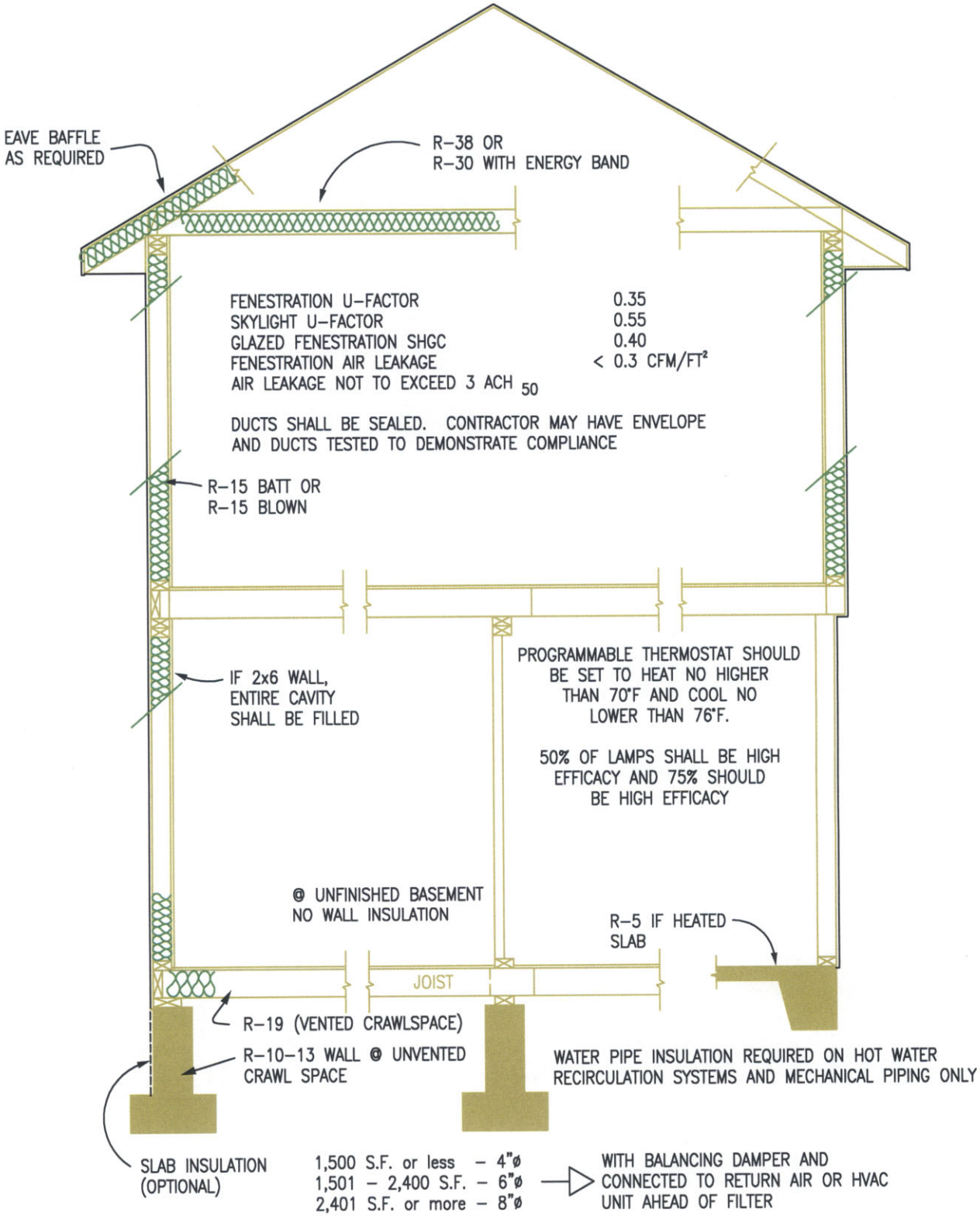

THIS SHEET IS NOT AN EXHAUSTIVE LIST. SEE IRC CHAPTER 11 FOR FULL REQUIREMENTS

ALTERNATIVE 1.1
Joist Perpendicular to Wall W/ Brick

2012 IRC

Section R404 Foundations and Retaining Walls
Section R404.1 Concrete and Masonry Foundation Walls

*This figure is provided as an example. This in not an all inclusive list of code requirements.

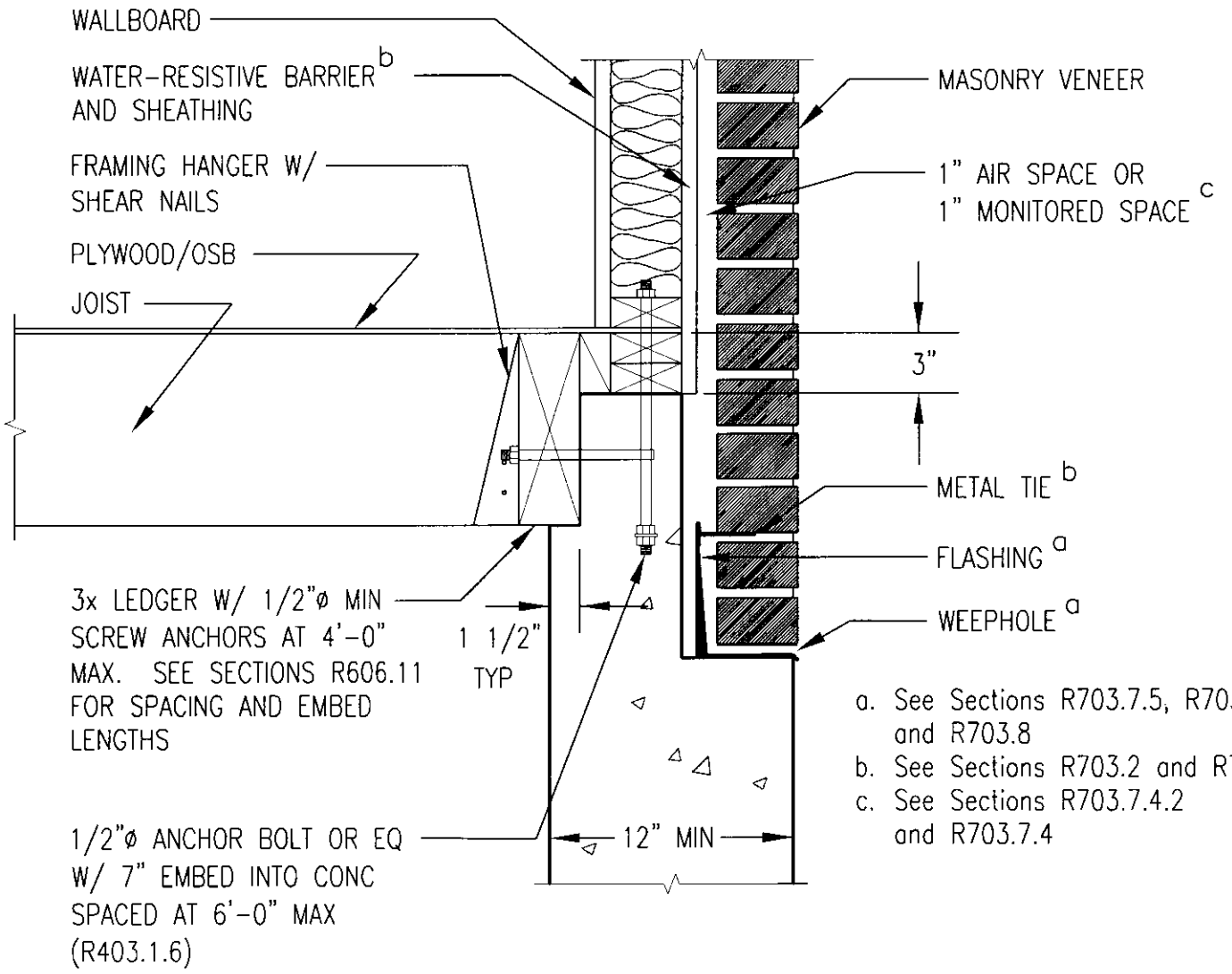

a. See Sections R703.7.5, R703.7.6 and R703.8
b. See Sections R703.2 and R703.7.4
c. See Sections R703.7.4.2 and R703.7.4

ALTERNATIVE 1.2

Joist Parallel to Wall W/ Brick

2012 IRC

Section R404 Foundations and Retaining Walls
Section R404.1 Concrete and Masonry Foundation Walls

*This figure is provided as an example. This in not an all inclusive list of code requirements.

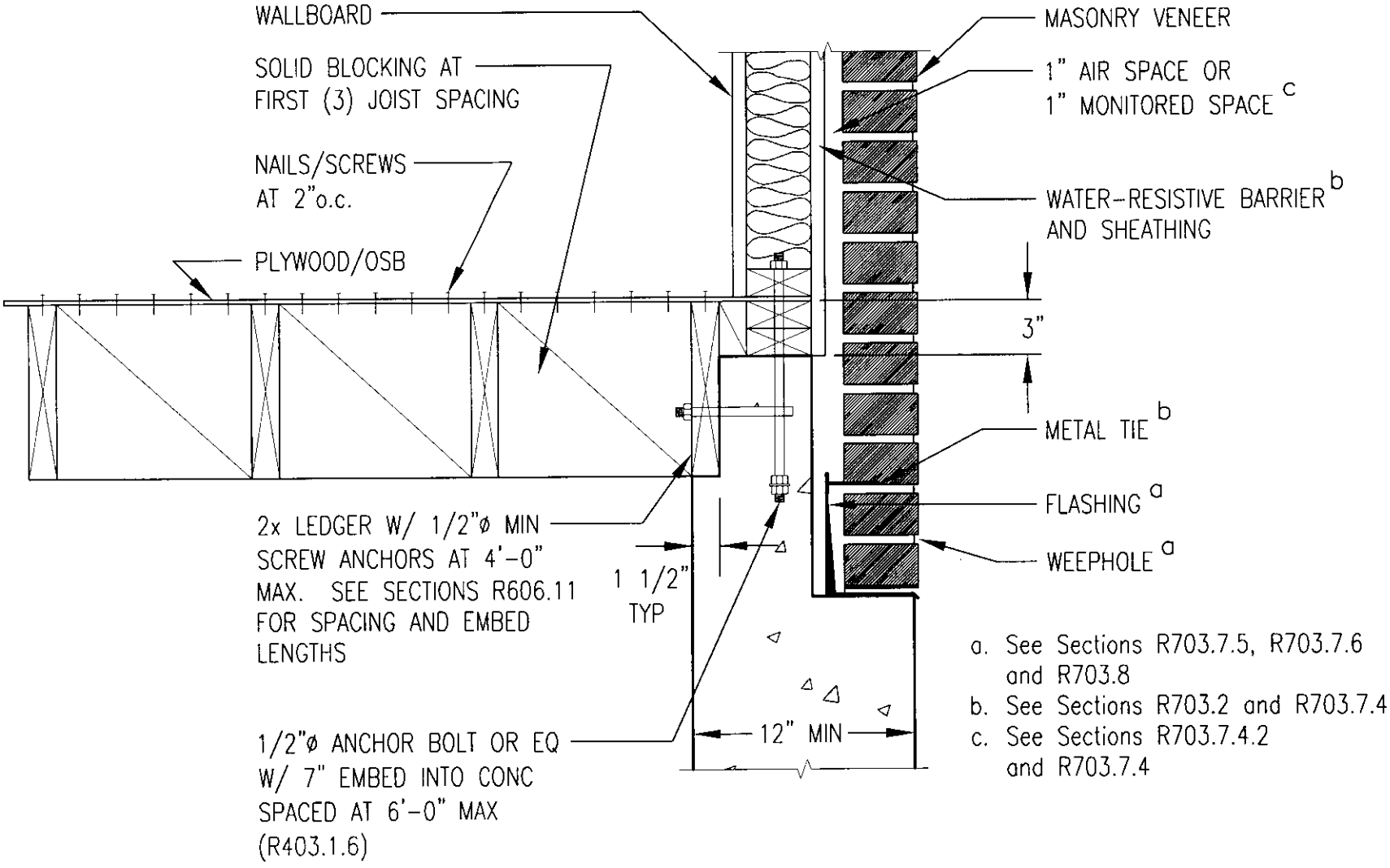

a. See Sections R703.7.5, R703.7.6 and R703.8
b. See Sections R703.2 and R703.7.4
c. See Sections R703.7.4.2 and R703.7.4

ALTERNATIVE 1.3

Joist Perpendicular to Wall W/O Brick

2012 IRC

Section R404 Foundations and Retaining Walls

Section R404.1 Concrete and Masonry Foundation Walls

* This figure is provided as an example. This in not an all inclusive list of code requirements.

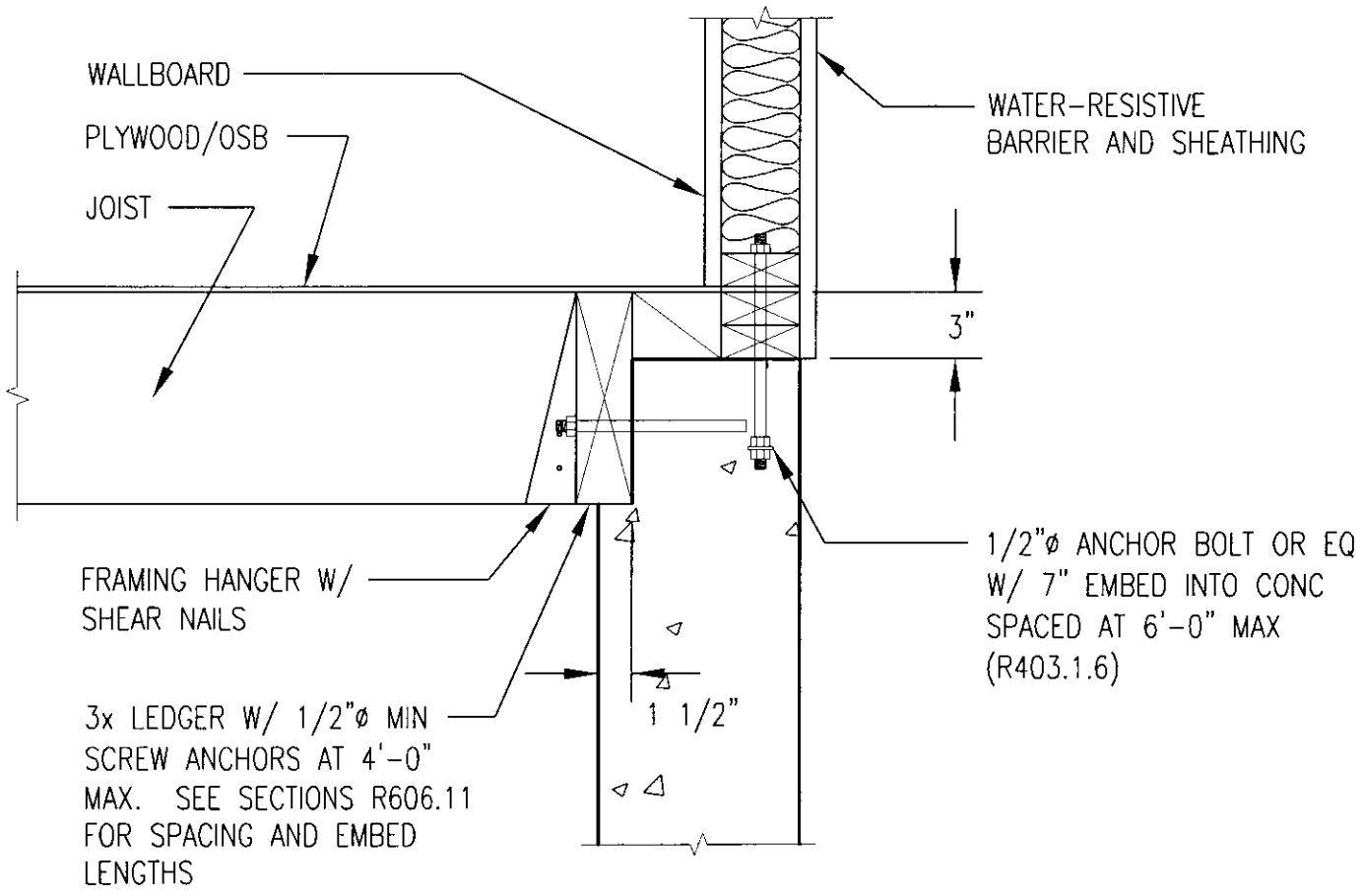

ALTERNATIVE 1.4

Joist Parallel to Wall W/O Brick

2012 IRC

Section R404 Foundations and Retaining Walls

Section R404.1 Concrete and Masonry Foundation Walls

* This figure is provided as an example. This in not an all inclusive list of code requirements.

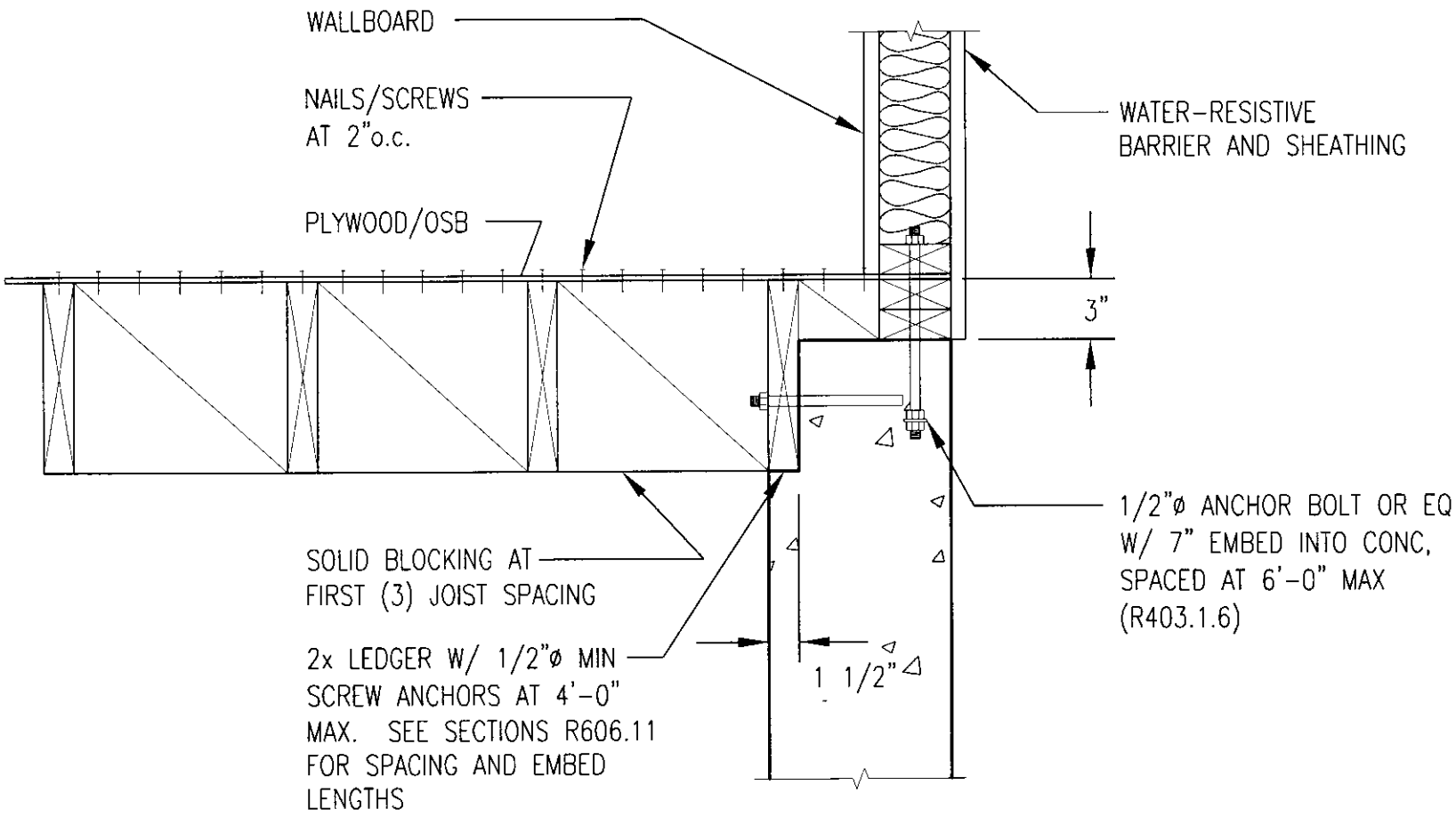

ALTERNATIVE 2.1

Joist Perpendicular to Wall

2012 IRC

Section R404 Foundations and Retaining Walls

Section R404.1 Concrete and Masonry Foundation Walls

* This figure is provided as an example. This in not an all inclusive list of code requirements.

NOTE A: Refer to the manufacturers tables for required spacing and placement of FWAZ wall angles

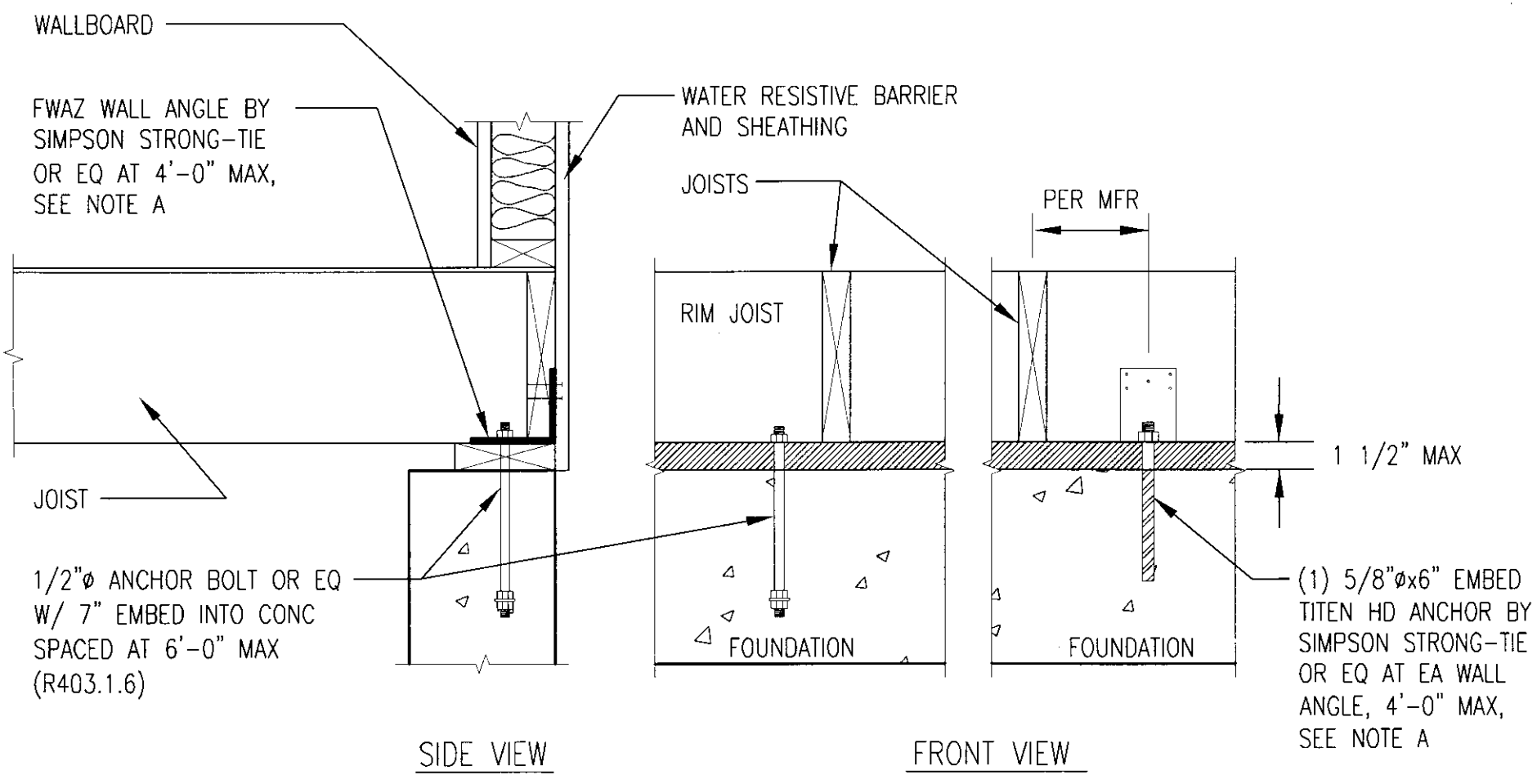

ALTERNATIVE 2.2

Joist Parallel to Wall

2012 IRC

Section R404 Foundations and Retaining Walls

Section R404.1 Concrete and Masonry Foundation Walls

* This figure is provided as an example. This in not an all inclusive list of code requirements.

NOTE A: Refer to the manufacturers tables for required spacing and placement of FWAZ wall angles

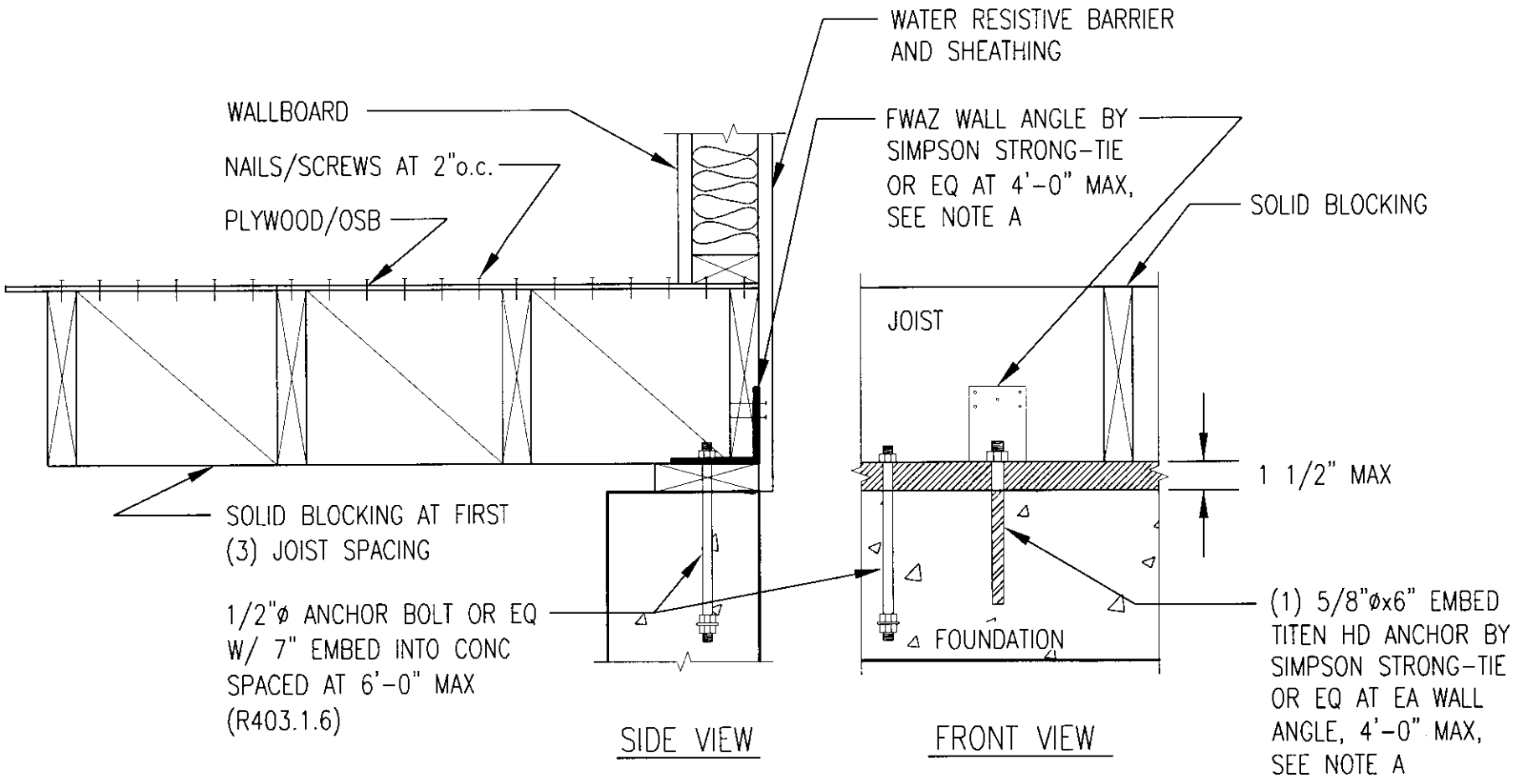

ALTERNATIVE 3.1

Joist Perpendicular to Wall W/O Brick

2012 IRC

Section R404 Foundations and Retaining Walls

Section R404.1 Concrete and Masonry Foundation Walls

* This figure is provided as an example. This in not an all inclusive list of code requirements.

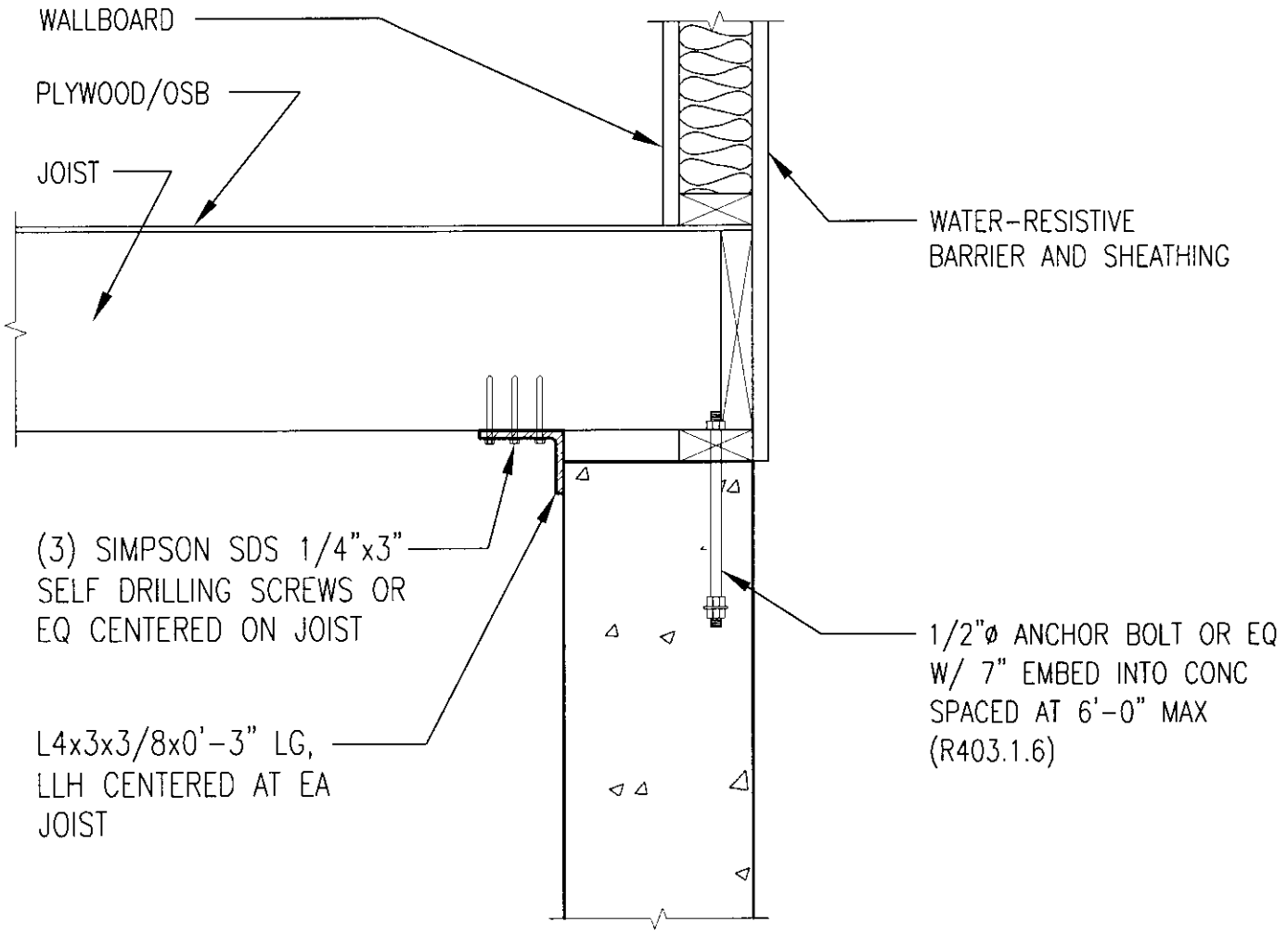

ALTERNATIVE 3.2

Joist Parallel to Wall W/O Brick

2012 IRC

Section R404 Foundations and Retaining Walls

Section R404.1 Concrete and Masonry Foundation Walls

* This figure is provided as an example. This in not an all inclusive list of code requirements.

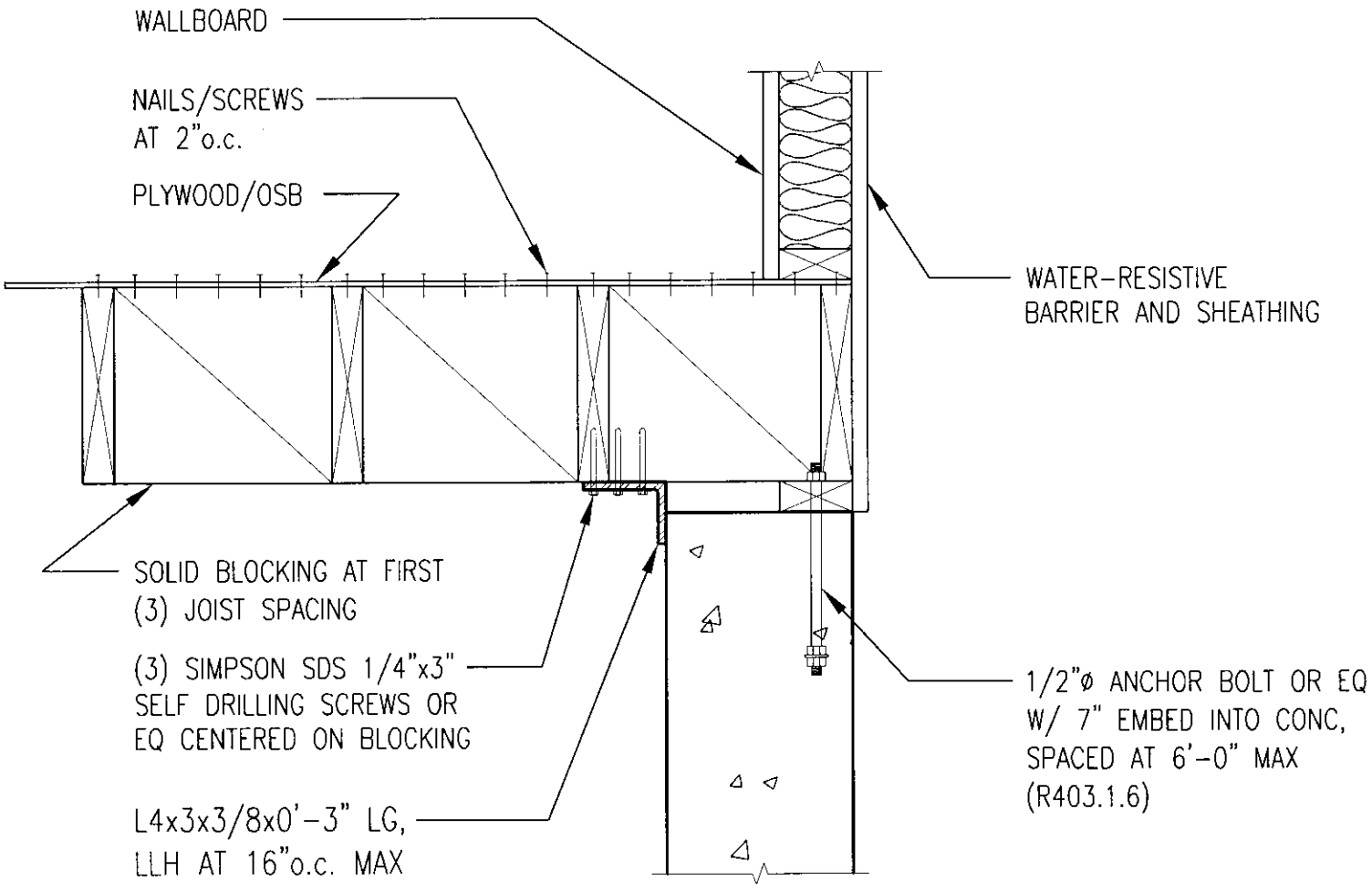

ALTERNATIVE 4

2012 IRC

Section R404 Foundations and Retaining Walls

Section R404.1 Concrete and Masonry Foundation Walls

* This figure is provided as an example. This in not an all inclusive list of code requirements.

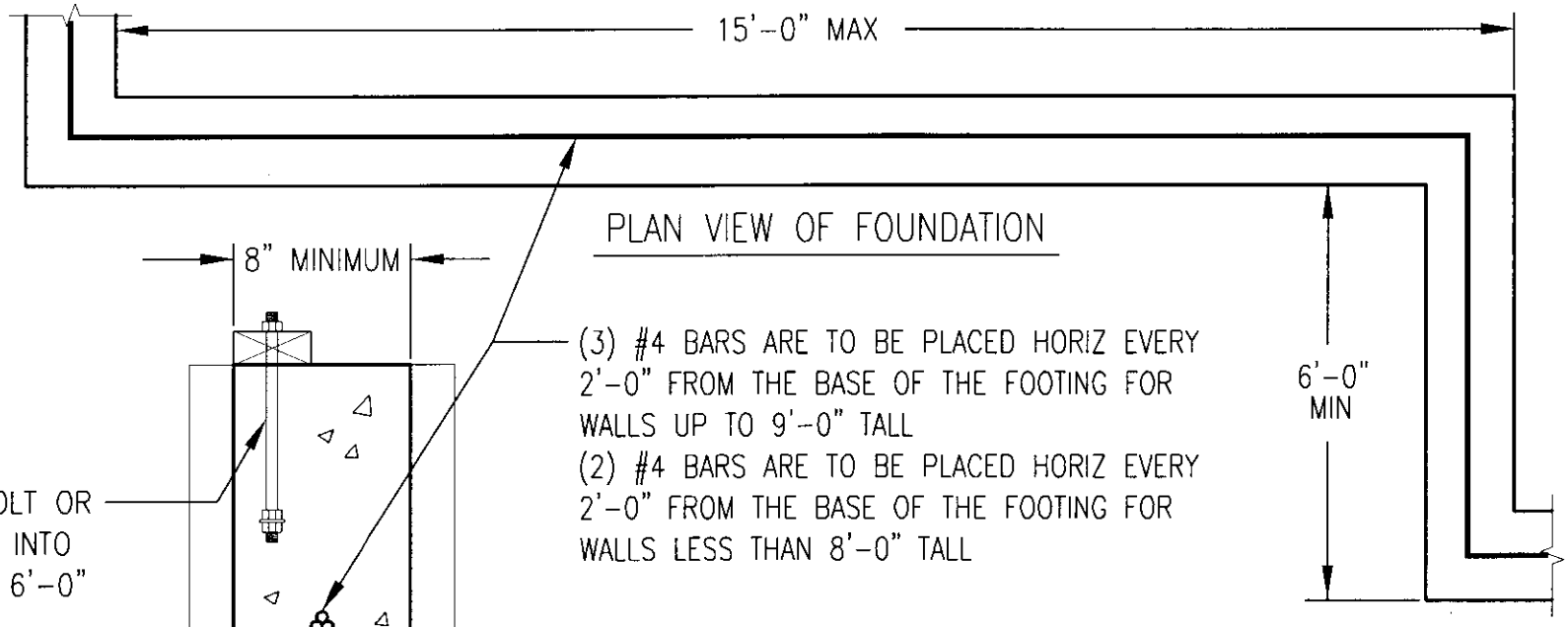

PLAN VIEW OF FOUNDATION

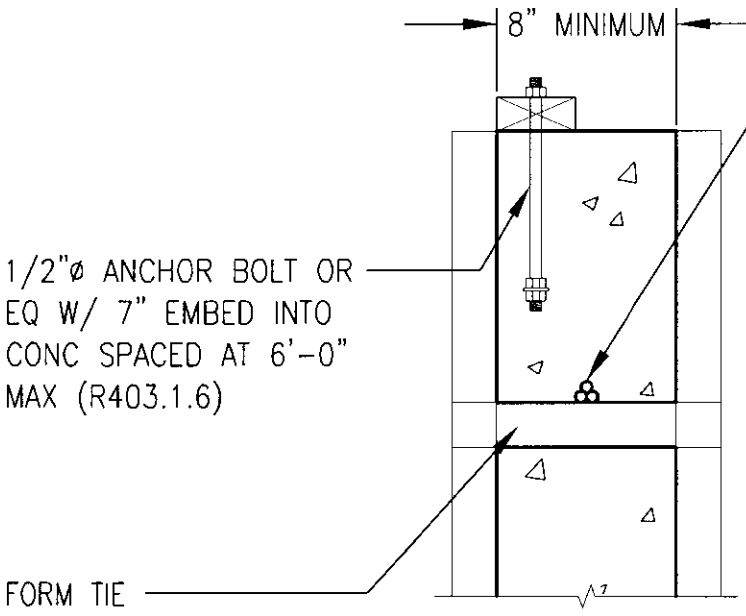

CROSS SECTION OF FOUNDATION WALL

(3) #4 BARS ARE TO BE PLACED HORIZ EVERY 2'-0" FROM THE BASE OF THE FOOTING FOR WALLS UP TO 9'-0" TALL

(2) #4 BARS ARE TO BE PLACED HORIZ EVERY 2'-0" FROM THE BASE OF THE FOOTING FOR WALLS LESS THAN 8'-0" TALL

NOTES:

1. (3) #4 BARS CAN BE REPLACED BY (1) #7
2. (2) #4 BARS CAN BE REPLACED BY (1) #6
3. MIN 48 BAR DIAMETER LAP SPLICES
4. GRADE 60 STEEL REINFORCEMENT

FOUNDATION DRAINAGE

FIGURE R405.1

2012 IRC

Section R405 Foundation Drainage

Section R406 Foundation Waterproofing and Dampproofing

* This figure is provided as an example. This in not an all inclusive list of code requirements.

** Either a filter fabric sock around draintile or filter fabric on the gravel shall be required, not both unless desired by the contractor.