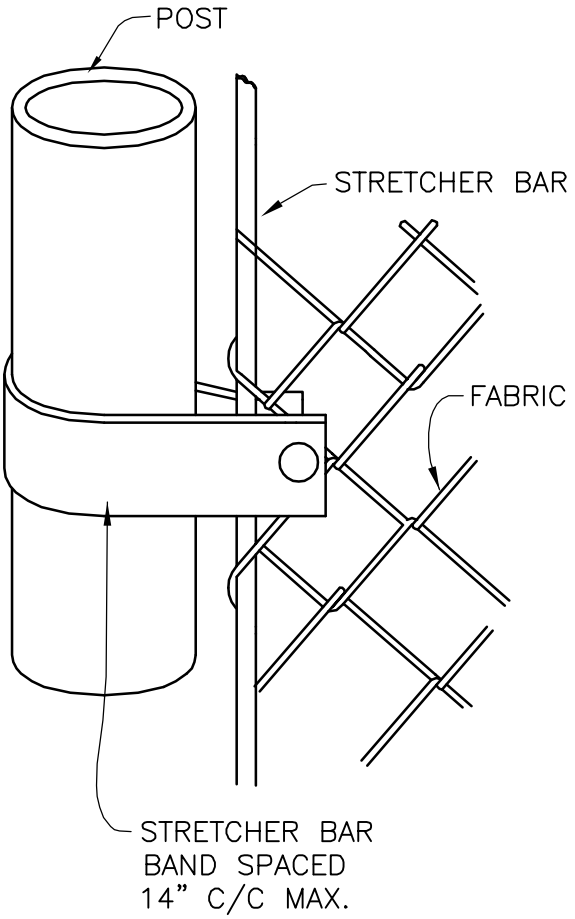

METHOD OF FASTENING
STRETCHER BAR TO POST

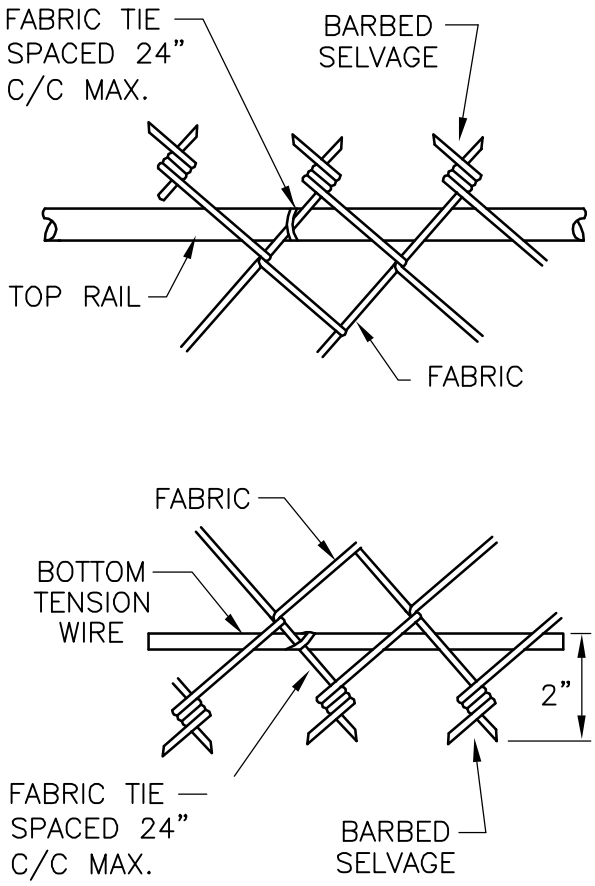

METHOD OF TYING
FABRIC TO TENSION WIRES

DM Approved	5/02/01 Date	City of Columbia Public Works Department	FASTENING & TYING	22
Revisions				