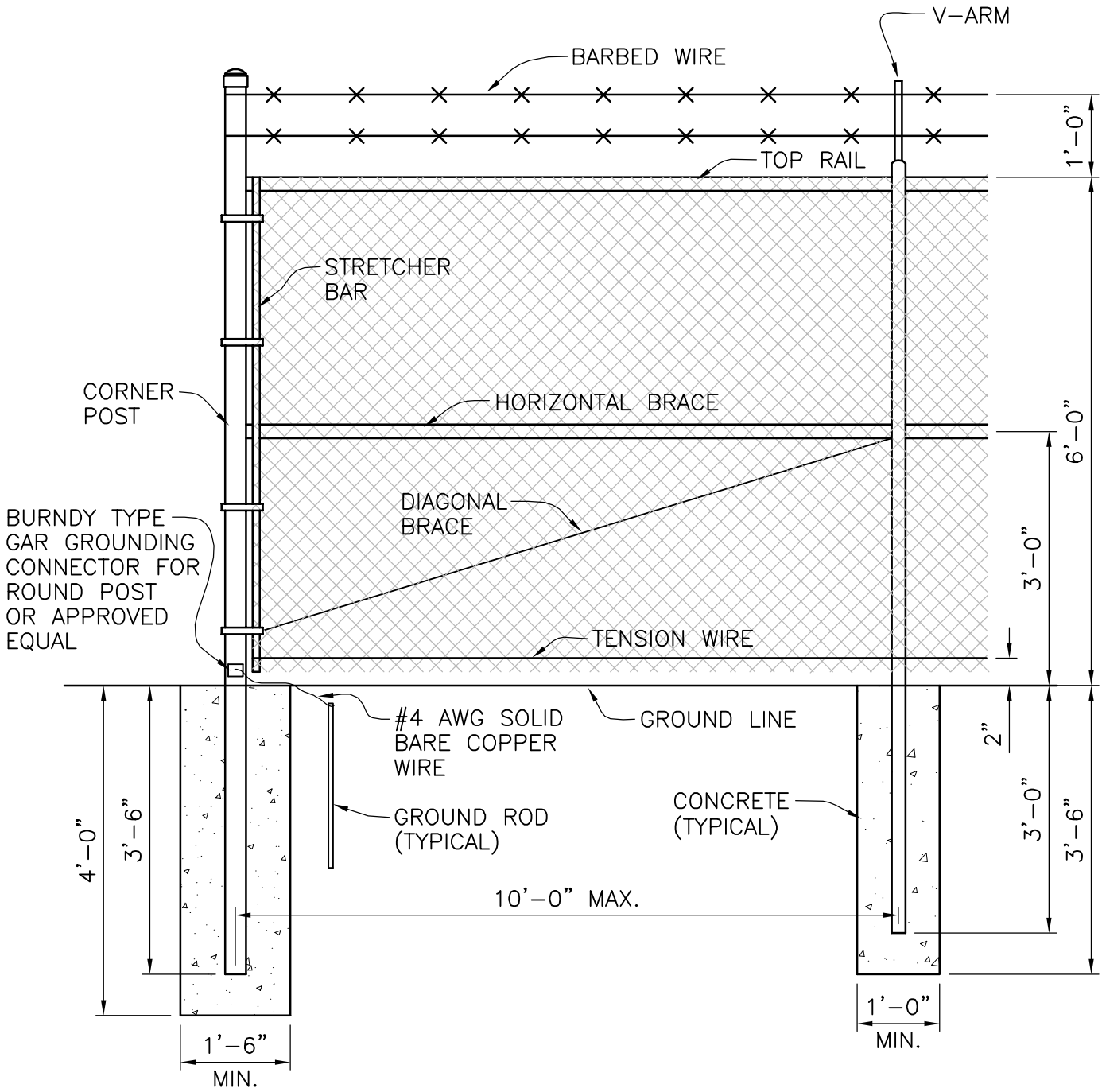

DM Approved	5/02/01 Date	City of Columbia Public Works Department	STANDARD CORNER	18
Revisions			