LEGEND OF SYMBOLS

POWER POLE	
TELEPHONE POLE	
GUY ANCHOR	
GUY POLE	
STREET LIGHT POLE	
CABLE TELEVISION	C or UC
TELEPHONE	T or UT
ELECTRIC	E or UE
TELEPHONE OR ELECTRIC MANHOLE	T or E
WATER MAIN	W W
GAS MAIN	G G
WATER METER	
GAS METER	
GAS OR WATER VALVE	G or WATER
FIRE HYDRANT	F.H.
SANITARY SEWER	SAN SAN
SANITARY SEWER LATERAL	LAT LAT
SANITARY MANHOLE	M.H.
SANITARY CLEANOUT	C.O.
SANITARY LATERAL CLEANOUT	C.O.
TREE	
TREE REMOVAL	
STUMP	
SIGN	
MAIL BOX	
FENCE	X X
PROPERTY IRON	IP or RE
BENCHMARK	B.M.
MoDOT R/W MARKER	
TRAVERSE POINT	T.P.
PROPERTY LINE	
LOT LINE	
EXISTING RIGHT OF WAY LINE	R.O.W.
EXISTING EASEMENT	
PROPOSED RIGHT OF WAY LINE	R.O.W
PROPOSED PERMANENT EASEMENT	PDE
TEMPORARY CONSTRUCTION EASEMENT	TCE
GRADING LIMIT	

Approved 6/01/16 Date

Revisions

City of Columbia
Public Works Department

SYMBOLS

100.01

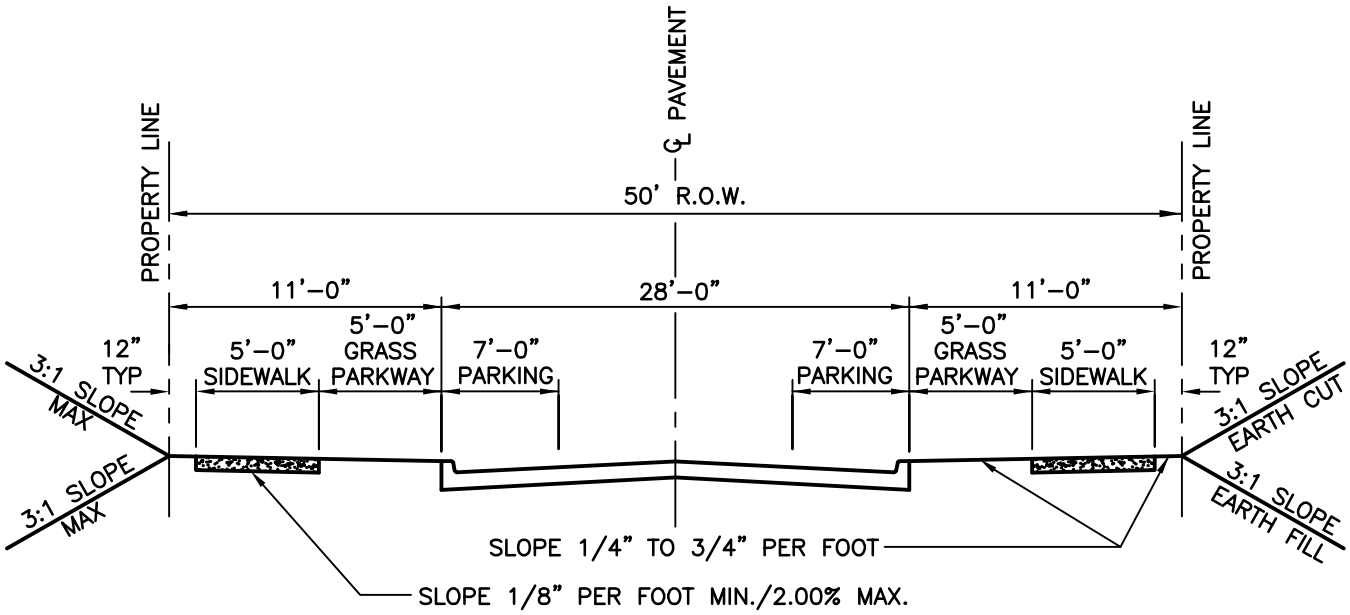

28 FT. PAVEMENT

(Standard Residential Street)

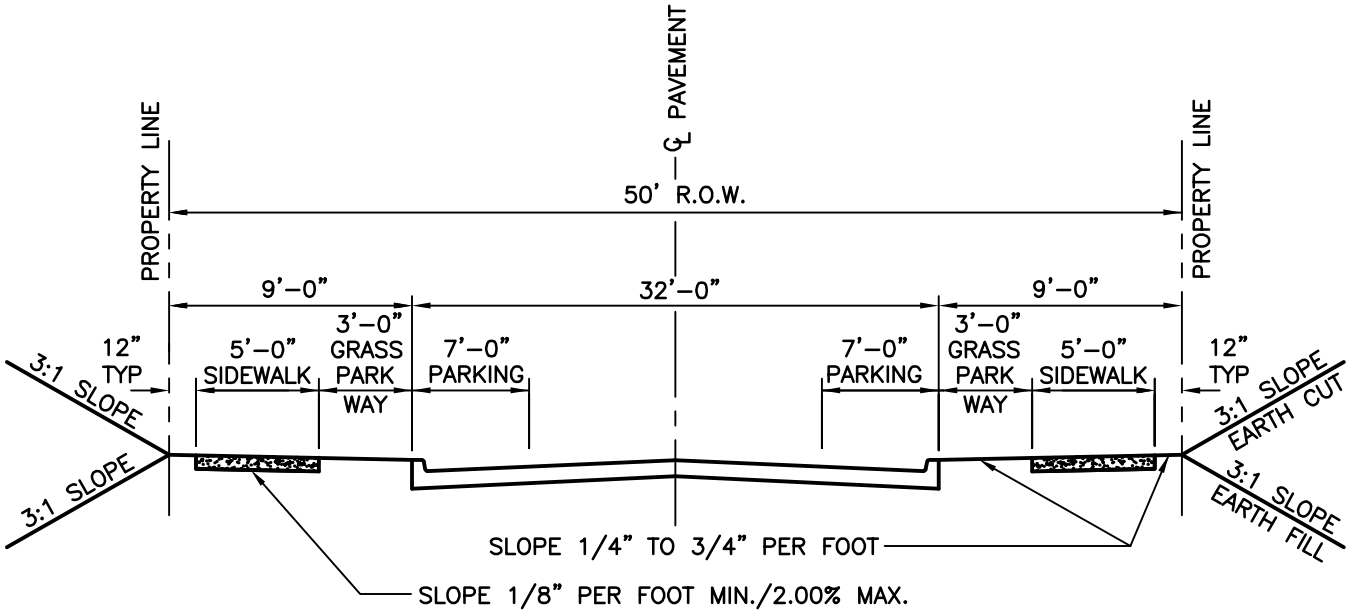

32 FT. PAVEMENT

(Residential Feeder)

NOTE:

SEE CROSS SECTION SHEETS FOR VARIATIONS DUE TO ROCK EXCAVATION. EXISTING LAWN GRADES, ETC. SEE PLAN SHEETS FOR LOCATION OF PAVEMENT AND SIDEWALKS WITHIN RIGHT-OF-WAY. SIDEWALK CROSS SLOPE SHALL NOT EXCEED 2.00%.

Approved	6/01/16 Date	City of Columbia Public Works Department	RESIDENTIAL STREET TYPICAL CROSS SECTIONS	110.01
Revisions				

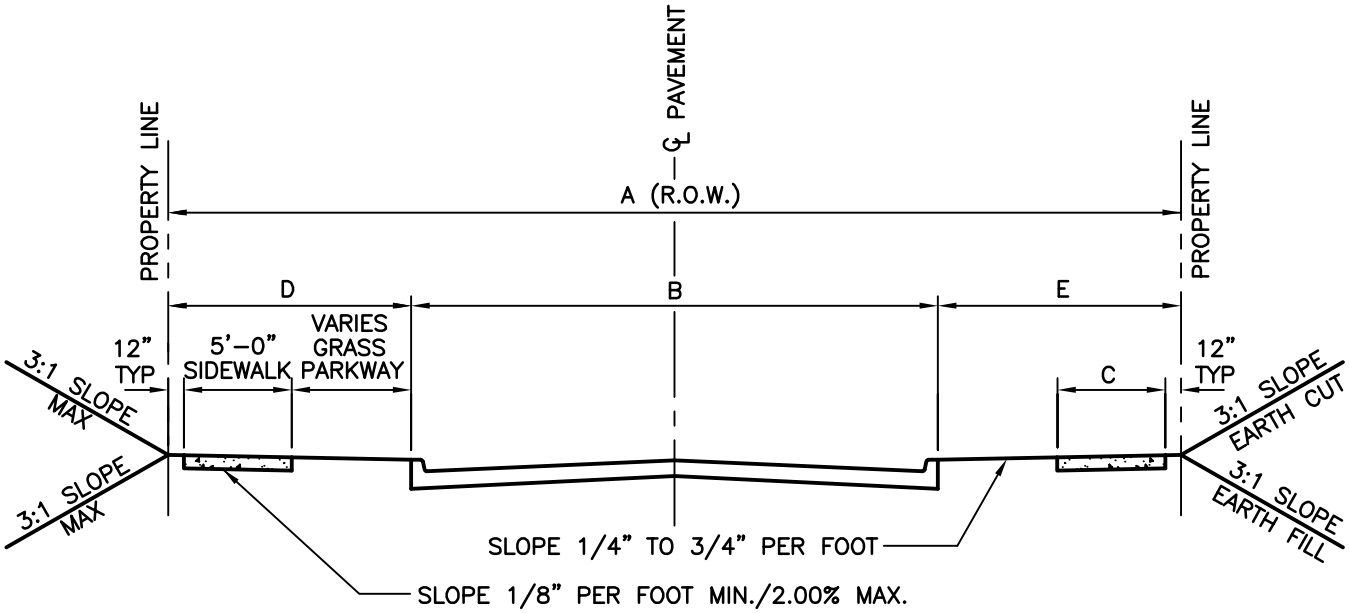

NOTE:

SEE CROSS SECTION SHEETS FOR VARIATIONS DUE TO ROCK EXCAVATION. EXISTING LAWN GRADES, ETC. SEE PLAN SHEETS FOR LOCATION OF PAVEMENT AND SIDEWALKS WITHIN RIGHT-OF-WAY.
SIDEWALK CROSS SLOPE SHALL NOT EXCEED 2.00%.

ITEM	A	B	C	D	E
NEIGHBORHOOD COLLECTOR OPTION A	60'	34'	5'	13'	13'
NEIGHBORHOOD COLLECTOR OPTION B	60'	30'	5'	15'	15'
MAJOR COLLECTOR	66'	36'	5'	15'	15'
MAJOR COLLECTOR OPTION A	66'	32'	8'	16'	18'
MAJOR COLLECTOR OPTION B	76'	44'	8'	15'	17'

Approved 6/01/16 Date

Revisions

City of Columbia
Public Works Department

COLLECTOR STREET TYPICAL CROSS SECTION

110.02

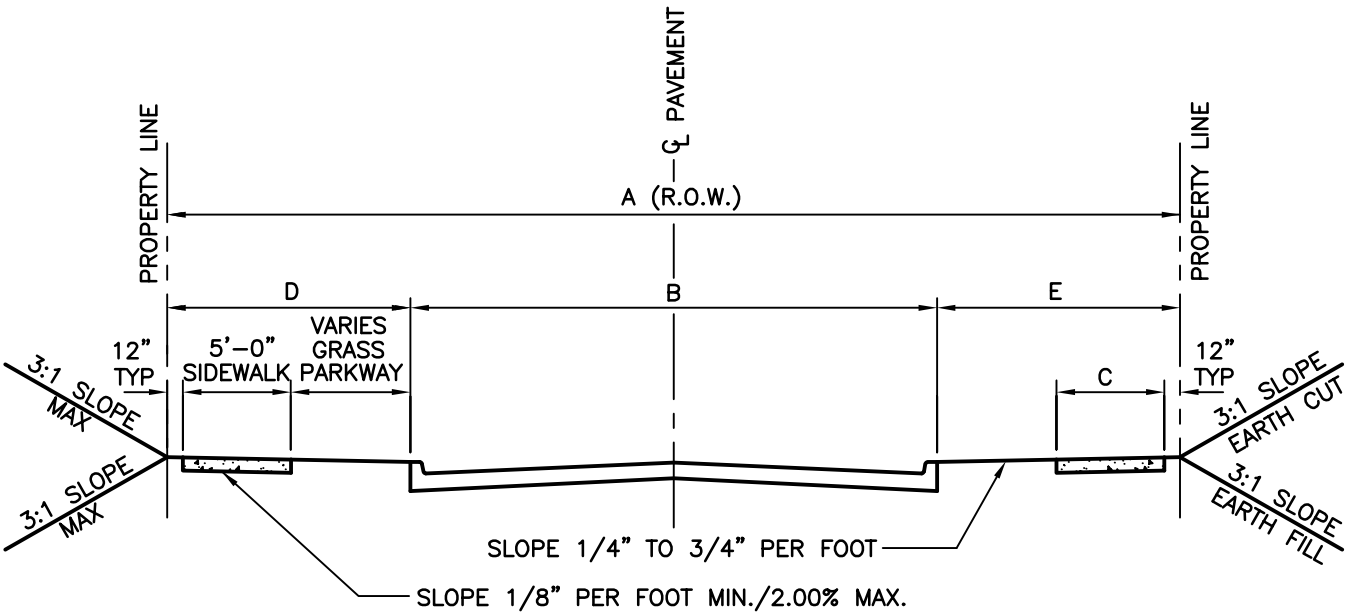

NOTE:

SEE CROSS SECTION SHEETS FOR VARIATIONS DUE TO ROCK EXCAVATION. EXISTING LAWN GRADES, ETC. SEE PLAN SHEETS FOR LOCATION OF PAVEMENT AND SIDEWALKS WITHIN RIGHT-OF-WAY.
SIDEWALK CROSS SLOPE SHALL NOT EXCEED 2.00%.

ITEM	A	B	C	D	E
NON-RESIDENTIAL STREET	66'	36'	5'	15'	15'
NON-RESIDENTIAL STREET OPTION A	60'	30'	5'	15'	15'
NON-RESIDENTAIL STREET OPTION B	60'	30'	5'	15'	15'
NON-RESIDENTIAL STREET OPTION C	66'	38'	5'	14'	14'

Approved 6/01/16 Date

Revisions

City of Columbia
Public Works Department

LOCAL NON-RESIDENTIAL STREET TYPICAL CROSS SECTION

110.03

Approved

Revisions

6/01/16
Date

City of Columbia
Public Works Department

SIDEWALK AT UNIMPROVED ROADWAY

110.04

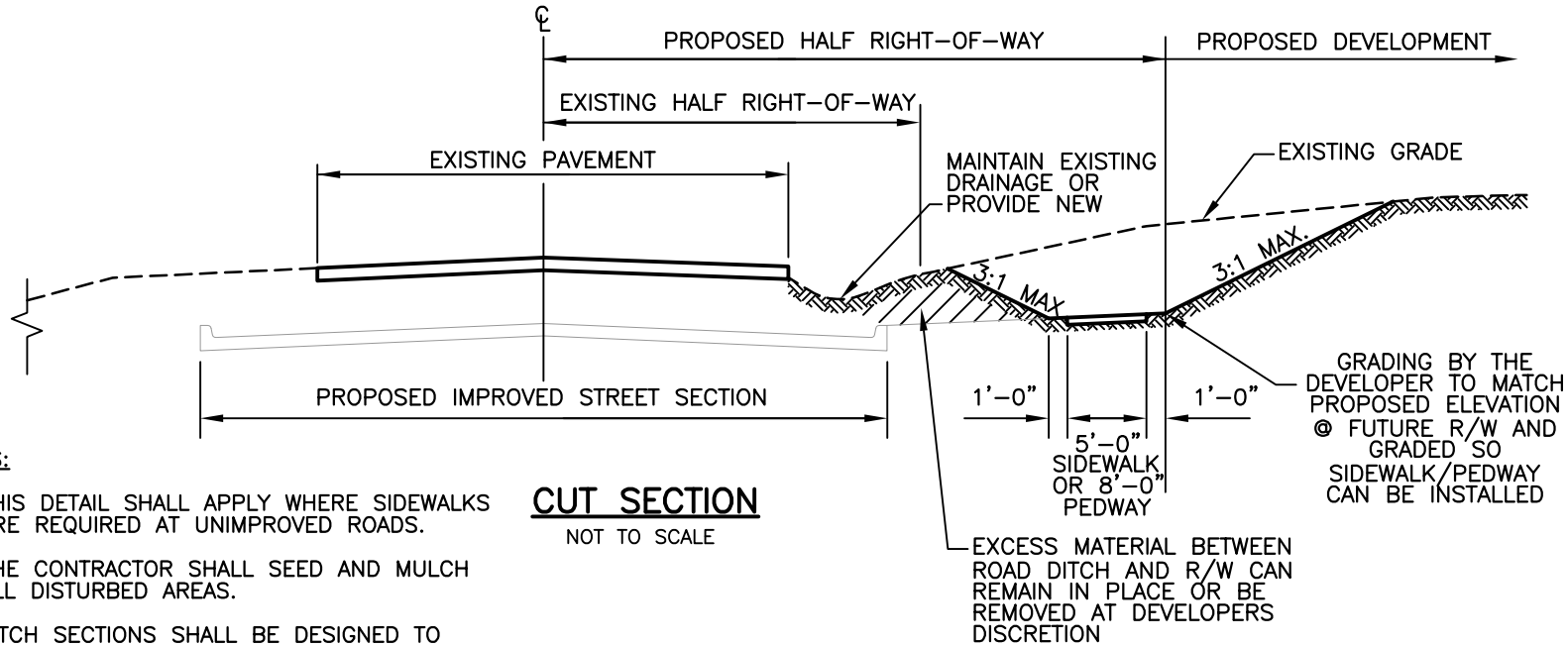

CUT SECTION

NOT TO SCALE

NOTES:

1. THIS DETAIL SHALL APPLY WHERE SIDEWALKS ARE REQUIRED AT UNIMPROVED ROADS.
2. THE CONTRACTOR SHALL SEED AND MULCH ALL DISTURBED AREAS.
3. DITCH SECTIONS SHALL BE DESIGNED TO CARRY THE APPROPRIATE DESIGN FLOW. DEVELOPER IS RESPONSIBLE TO MAINTAIN DRAINAGE.
4. PUBLIC WORKS ENGINEERING TO PROVIDE PROPOSED HORIZONTAL & VERTICAL ALIGNMENT OF IMPROVED STREET SECTION.
5. IMPROVED STREET SECTION TO BE DETERMINED BY THE CITY OF COLUMBIA.
6. PROVIDE SIDEWALK ELEVATIONS AT EACH LOT LINE OR EVERY 100 FEET, WHICHEVER IS LESS.

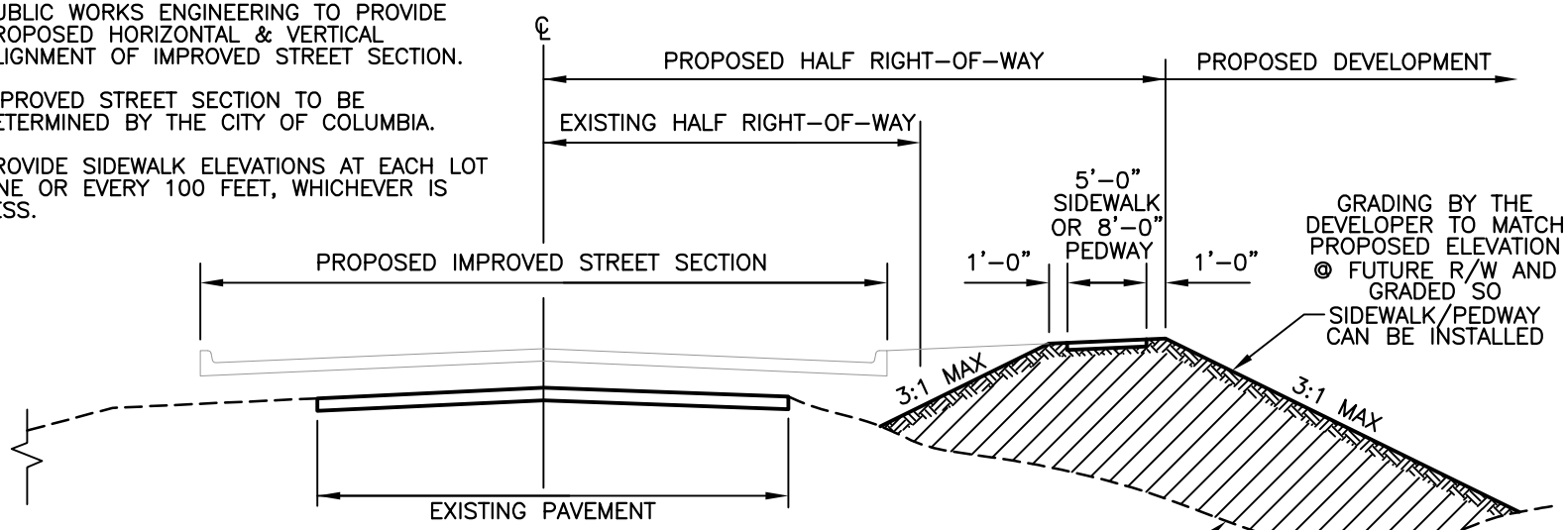

FILL SECTION

NOT TO SCALE

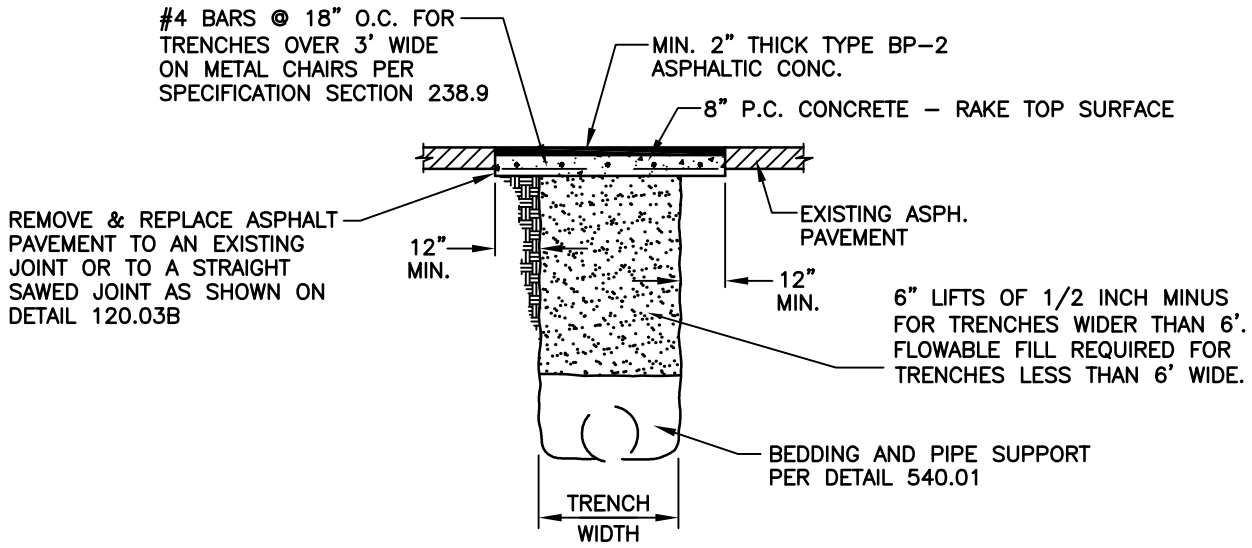

EXISTING ASPHALTIC PAVEMENT

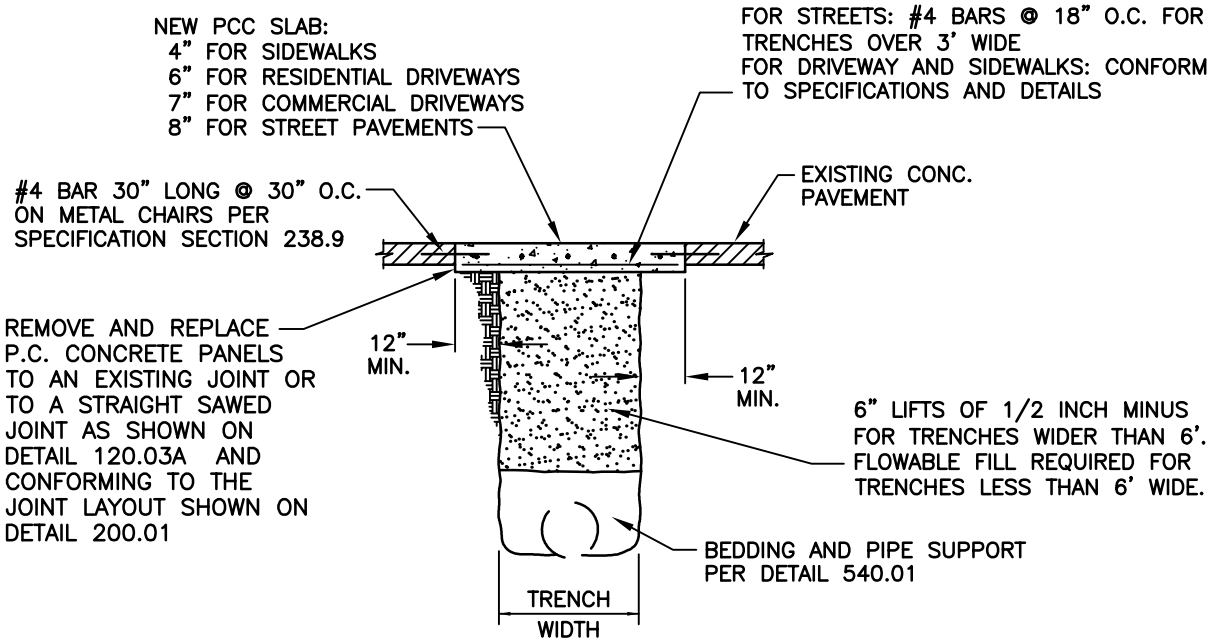

EXISTING CONCRETE PAVEMENT

NOTES:

1. CONCRETE SHALL BE MoDOT PAVEMENT CONCRETE. REINFORCING STEEL SHALL BE GRADE 60.
2. FOR BRICK STREETS W/ASHPALTIC OVERLAY THE TOP OF 8" P.C.C. SLAB SHALL MATCH THE TOP OF BRICKS AND THE NEW ASPHALT THICKNESS SHALL MATCH EXSTING ASPHALT THICKNESS.
3. FOR BRICK STREETS THE TOP OF 8" P.C.C. SLAB SHALL MATCH TOP OF SUBGRADE.

Approved 6/01/16 Date	City of Columbia Public Works Department	PAVEMENT PATCHING	120.01
Revisions			

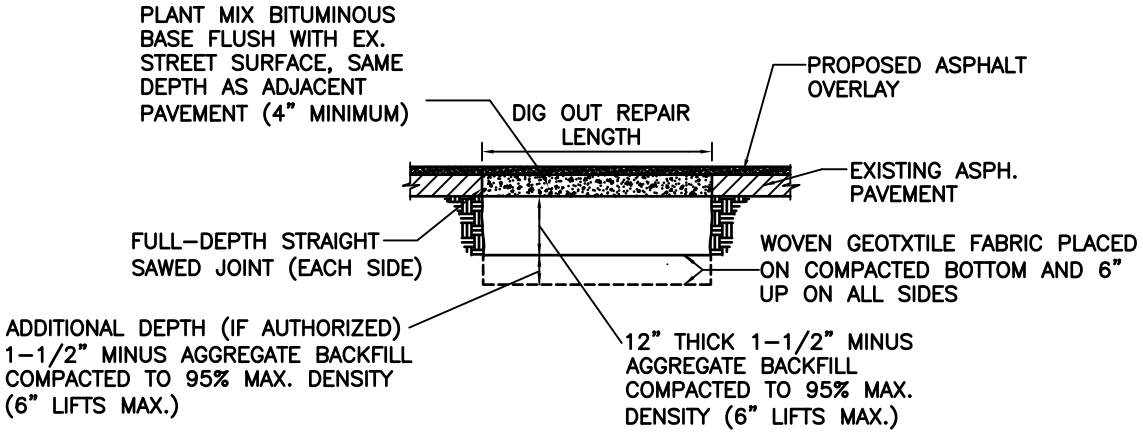

NOTES:

1. SAW CUT AREA DESIGNATED BY PUBLIC WORKS.

2. EXCAVATE TO A DEPTH OF 12" MINIMUM BELOW BOTTOM OF EXISTING STREET ELEVATION. IF ADDITIONAL DEPTH DIG OUT IS REQUIRED AND AUTHORIZED, PROCEED WITH STEPS BELOW AND ADD STEP 4A.

3. BASE MUST BE APPROVED BY ENGINEER BEFORE PLACEMENT OF FABRIC AND ROCK.

4. COMPACT BOTTOM AND PLACE WOVEN FABRIC (MIRAFI 600X OR APPROVED EQUAL).

4A. PLACE TYPE 2, 1-1/2" MINUS AGGREGATE COMPACTED IN 6" MAXIMUM LIFTS TO REACH THE NORMAL DIG OUT REPAIR DEPTH OF 16" BELOW EXISTING STREET ELEVATION. ADDITIONAL DEPTH SHALL BE PAID BY THE CUBIC YARD PER THE BID FORM.

5. PLACE TWO (2) 6" LIFTS OF TYPE 2, 1-1/2" MINUS COMPACTED AGGREGATE.

6. PLACE 4" MINIMUM LIFT OF COMPACTED PLANT MIX BITUMINOUS BASE ON PRIMED BASE ROCK. FINISH SHALL BE FLUSH WITH EXISTING ROAD SURFACE AND HAVE A SMOOTH RIDE.

7. CONTRACTOR SHALL REMOVE AND DISPOSE OF ALL MATERIALS EXCAVATED FROM THE REPAIR AREA.

Approved	6/01/16 Date	City of Columbia Public Works Department	DIG OUT REPAIR	120.02
Revisions				

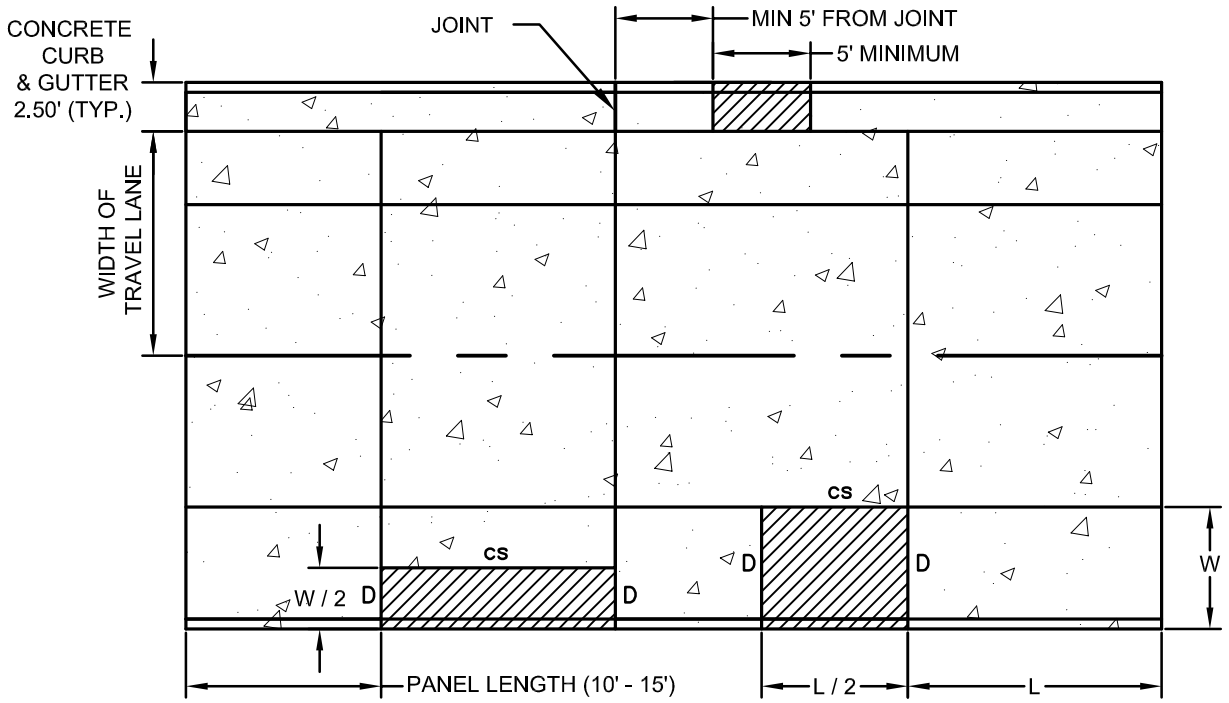

REQUIRED PAVEMENT PATCH OR PANEL/CURB REPLACEMENT

CONCRETE PAVEMENT PATCH NOTES:

1. HALF PANELS MAY BE REPLACED PER THIS DETAIL. WHERE A REPAIR DOES NOT FALL IN THE HALF PANEL, REPLACE FULL PANEL.
2. A MINIMUM OF 5' OF CURB AND GUTTER SHALL BE REPLACED. WHERE THE REPAIR WILL BE WITHIN 5' OF A JOINT, REPLACE CURB AND GUTTER TO THE JOINT. NO SECTION OR CURB AND GUTTER SHALL BE LESS THAN 5' LONG.
3. ALL SAWING OF STREETS SHALL BE FULL DEPTH AND DONE IN A NEAT AND WORKMANLIKE MANNER.
4. INSTALL PAVEMENT JOINT TYPES AS SHOWN AND DOWEL CURB AND GUTTER AND PANELS PER STANDARD DETAILS.
5. L =PANEL LENGTH
6. W = PANEL WIDTH

Approved	6/01/16 Date	City of Columbia Public Works Department	CONCRETE PAVEMENT PATCHING	120.03A
Revisions				

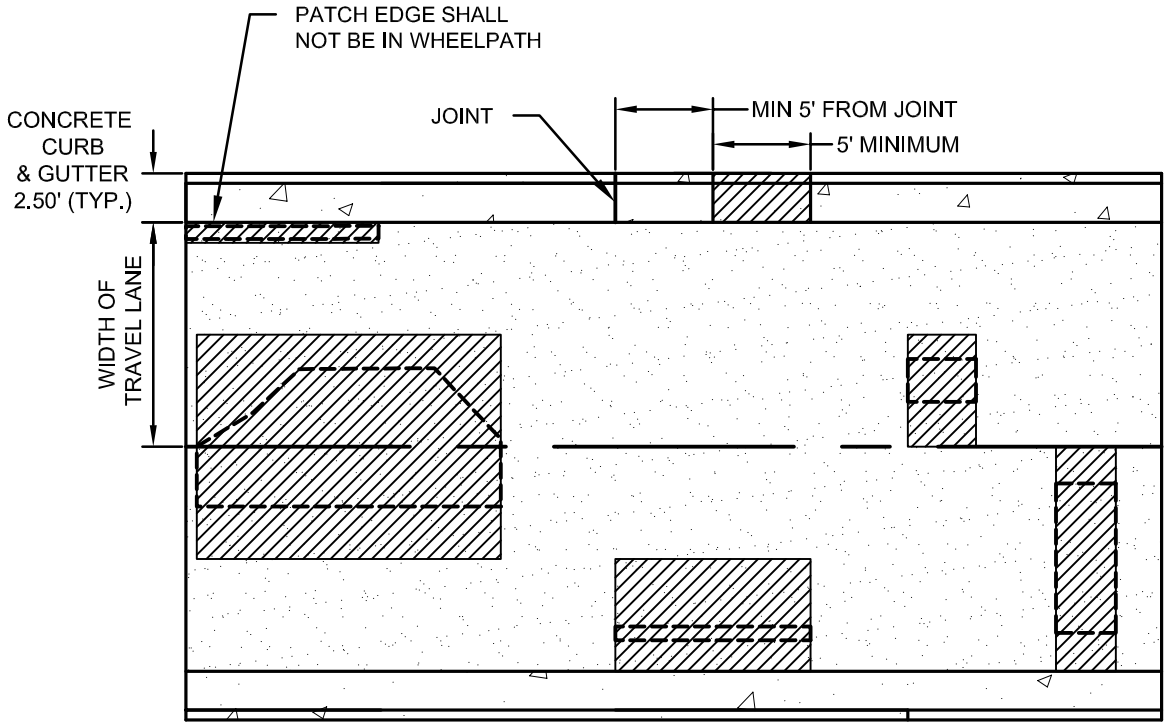

REQUIRED PAVEMENT PATCH OR PANEL/CURB REPLACEMENT

EXAMPLES OF WORK LIMITS/ PAVEMENT TO BE REPAIRED

ASPHALT PAVEMENT PATCH NOTES:

1. EXISTING PAVEMENTS SHALL BE REMOVED TO CLEAN, STRAIGHT LINES. MAKE CUTS PARALLEL OR PERPENDICULAR TO TRAFFIC FLOW. PATCH EDGES PARALLEL TO TRAFFIC FLOW SHALL NOT BE LOCATED IN WHEELPATHS.
2. AVOID BREAKING AWAY THE EDGES OF EXISTING PAVEMENT OR DAMAGING THE REMAINING PAVEMENT WITH CONSTRUCTION EQUIPMENT.
3. AVOID PATCHES WITHIN EXISTING PATCHES. IF THIS CANNOT BE AVOIDED, MAKE THE BOUNDARIES OF THE PATCHES COINCIDE.
4. PATCHES SHOULD HAVE A SMOOTH LONGITUDINAL GRADE CONSISTENT WITH THE EXISTING ROADWAY. PATCHES SHOULD ALSO HAVE A CROSS SLOPE OR CROSS SECTION CONSISTENT WITH THE DESIGN OF THE EXISTING ROADWAY.
5. A MINIMUM OF 5' OF CURB AND GUTTER SHALL BE REPLACED. WHERE THE REPAIR WILL BE WITHIN 5' OF A JOINT, REPLACE CURB AND GUTTER TO THE JOINT. NO SECTION OR CURB AND GUTTER SHALL BE LESS THAN 5' LONG.

Approved	6/01/16 Date	City of Columbia Public Works Department	ASPHALT PAVEMENT PATCHING	120.03B
Revisions				

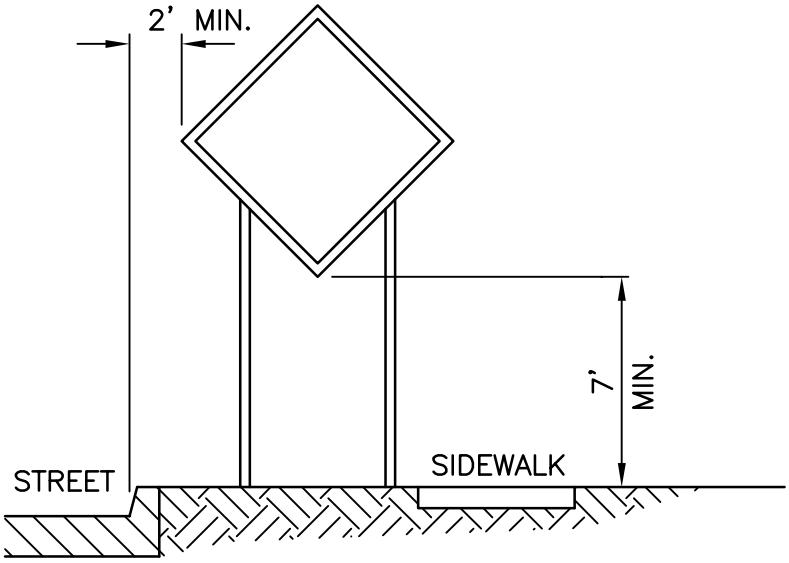

CURB & GUTTER MOUNTING

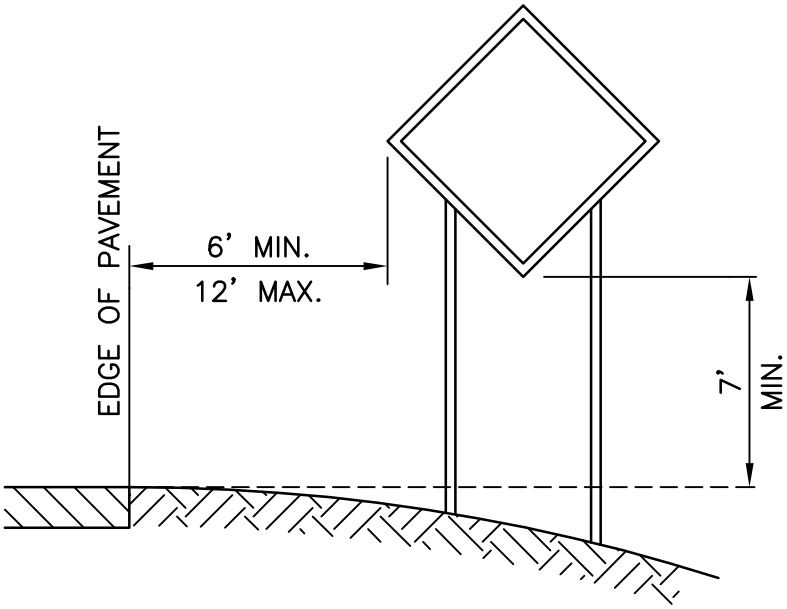

NON–CURB & GUTTER MOUNTING

NOTE: SUPPORT POSTS SHALL NOT EXTEND ABOVE SIGN UNLESS DISTANCE PLAQUE OR WARNING LIGHTS ARE SPECIFIED.

Approved 6/01/16 Date	City of Columbia Public Works Department	SIGN MOUNTING	130.01
Revisions			

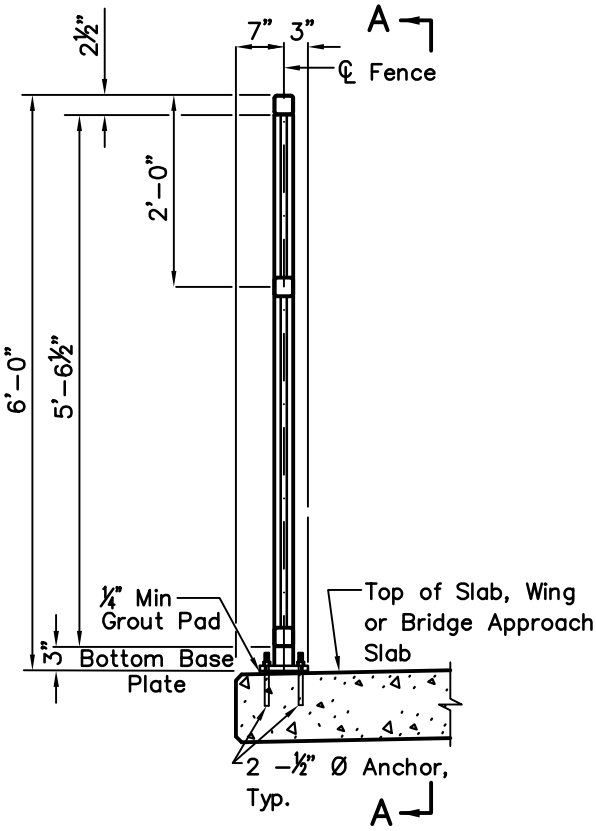

TYPICAL SECTION

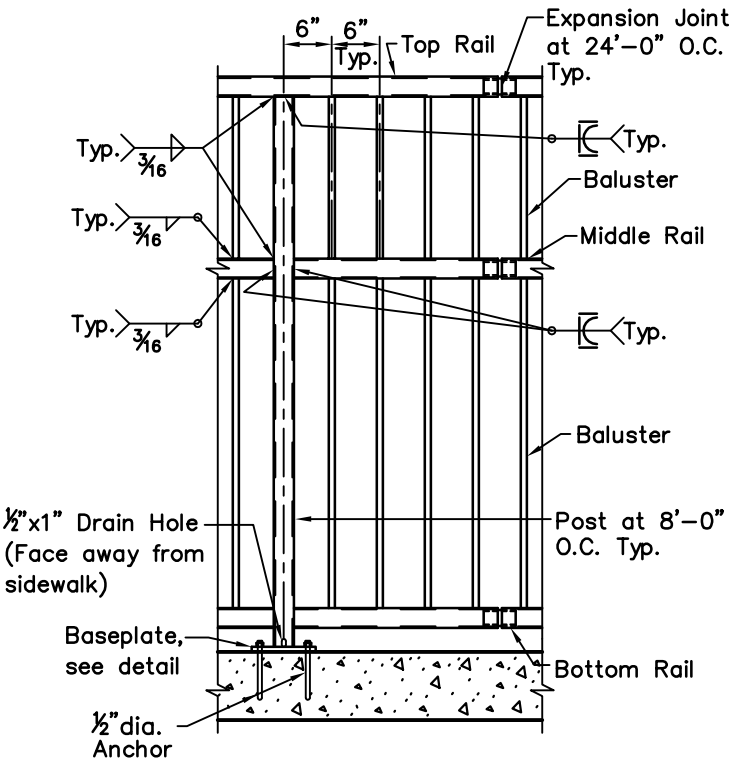

SECTION A–A

NOTE:

Anchors shall be drilled in place. Exposed portion of anchors, nuts and washers shall be field painted after installation.

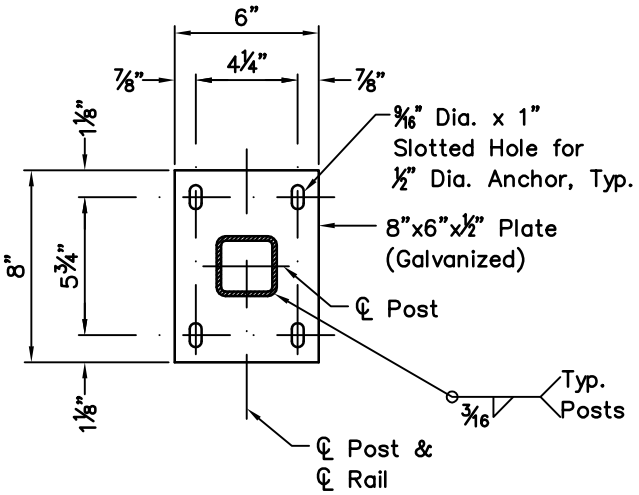

BASE PLATE DETAIL

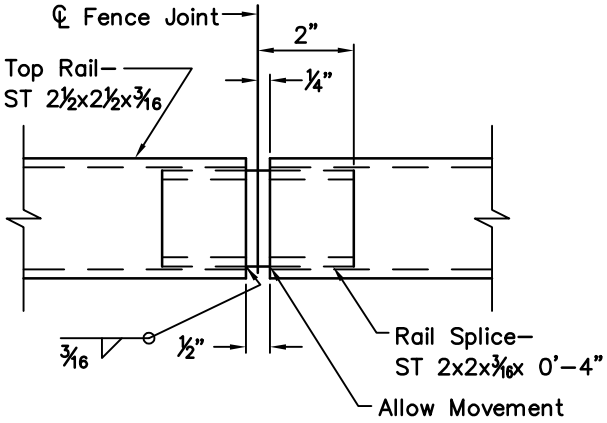

EXPANSION JOINT DETAIL

Shown at Top Rail.
Middle and Bottom Rail similar.

Approved 6/01/16 Date	City of Columbia Public Works Department	STEEL PEDESTRIAN FENCE	140.01A
Revisions			

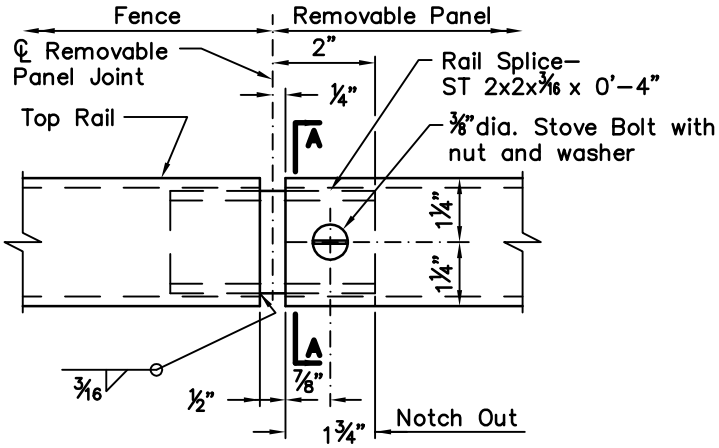

REMOVEABLE PANEL JOINT DETAIL

Shown at Top Rail.
Middle and Bottom Rail similar.

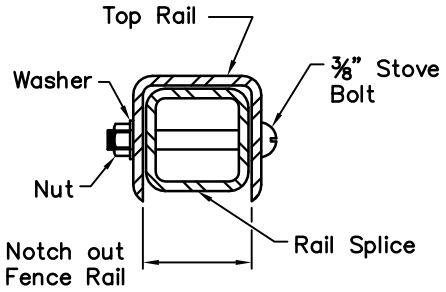

SECTION A–A

GENERAL NOTES:

1. All rails and posts shall be 2½"x2½"x3/16" structural tubing. Tubing for all rails and posts shall conform to ASTM A500, Grade B. Balusters shall be ¾"x¾" steel bar. Balusters and base plates shall conform to ASTM A709, Grade 36.

2. Galvanize and paint all rails, posts, balusters and base plates after fabrication. Galvanization shall be in accordance with ASTM A123 and Missouri Standard Specification for Highway Construction Sec. 1081. Fence shall be painted with System G (Black) in accordance with Sec 1081. Black color shall be federal color number 17038.

3. Rails and base plates shall be set parallel to top of slab. All posts and balusters shall be set vertical. Grout shall be used between concrete and base plate of post.

4. All rail–to–post welded connections shall be ground smooth. No field welding will be permitted. The Contractor shall submit shop drawings to the Engineer for approval prior to fabrication of the fence.

5. Use E70 XX electrodes for all welding.

6. All material, labor, splices, grout, and installation shall be paid for under the bid item "Pedestrian Fence" per linear foot.

7. A grouted leveling pad shall be used to erect the posts vertical. The leveling pads shall be a non–shrink grout as approved by the Engineer. The grout shall be mixed, applied and cured according to the manufacturer's recommendations.

8. Concrete anchors, nuts and washers shall be galvanized in accordance with ASTM A153 and Sec.1081.

9. Nuts shall conform to ASTM A307. Nuts shall be regular hexagon type. Washers shall be of standard commercial quality.

10. The concrete anchors shall have a minimum ultimate pullout strength of 7900 lbs. based on the concrete. The length of embedment into concrete shall conform to manufacturer's recommendations.

Approved 6/01/16 Date	City of Columbia Public Works Department	STEEL PEDESTRIAN FENCE	140.01B
Revisions			

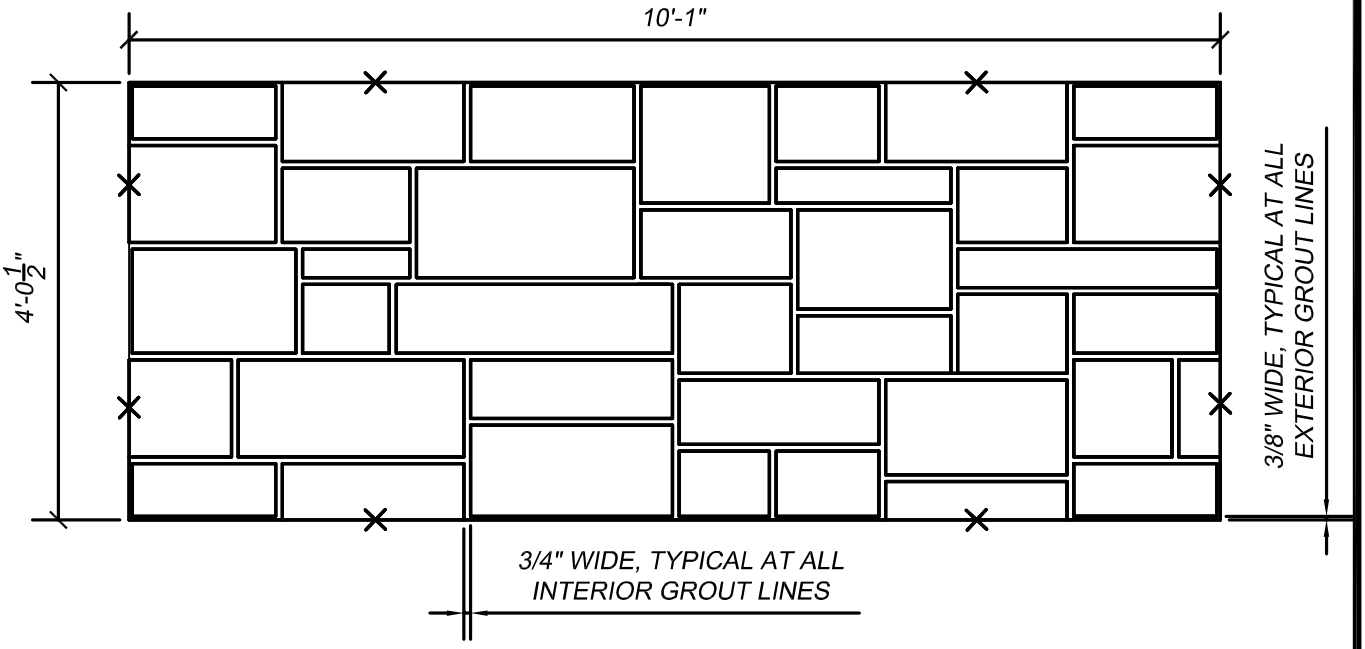

TYPICAL ASHLAR CUT STONE PATTERN

NOT TO SCALE

GENERAL NOTES

1. STONE HEIGHTS: 3½" TO 13"
2. STONE WIDTHS: 9½" TO 30½"
3. MAXIMUM PATTERN DEPTH: 1½"
4. PERIMETER ½ GROUT LINE WITH PATTERN MATCHING – (8) PARTIAL STONES (X's)
5. PROFILE ALLOWS PATTERN MATCHING WITH 180 DEGREE ROTATION OF ADJOINING SHEET

NOTE: ASHLAR CUT STONE PATTERN SHALL BE GREENSTREAK GSK460 OR APPROVED EQUAL. CONTRACTOR SHALL SUBMIT ASHLAR CUT STONE PATTERN FORM LINER SYSTEM SPECIFICATIONS AND DRAWING OF THE ASHLAR STONE FORM PATTERN FOR THE APPROVAL OF THE CITY.

Approved 6/01/16 Date	City of Columbia Public Works Department	ASHLAR CUT STONE PATTERN	150.01
Revisions			

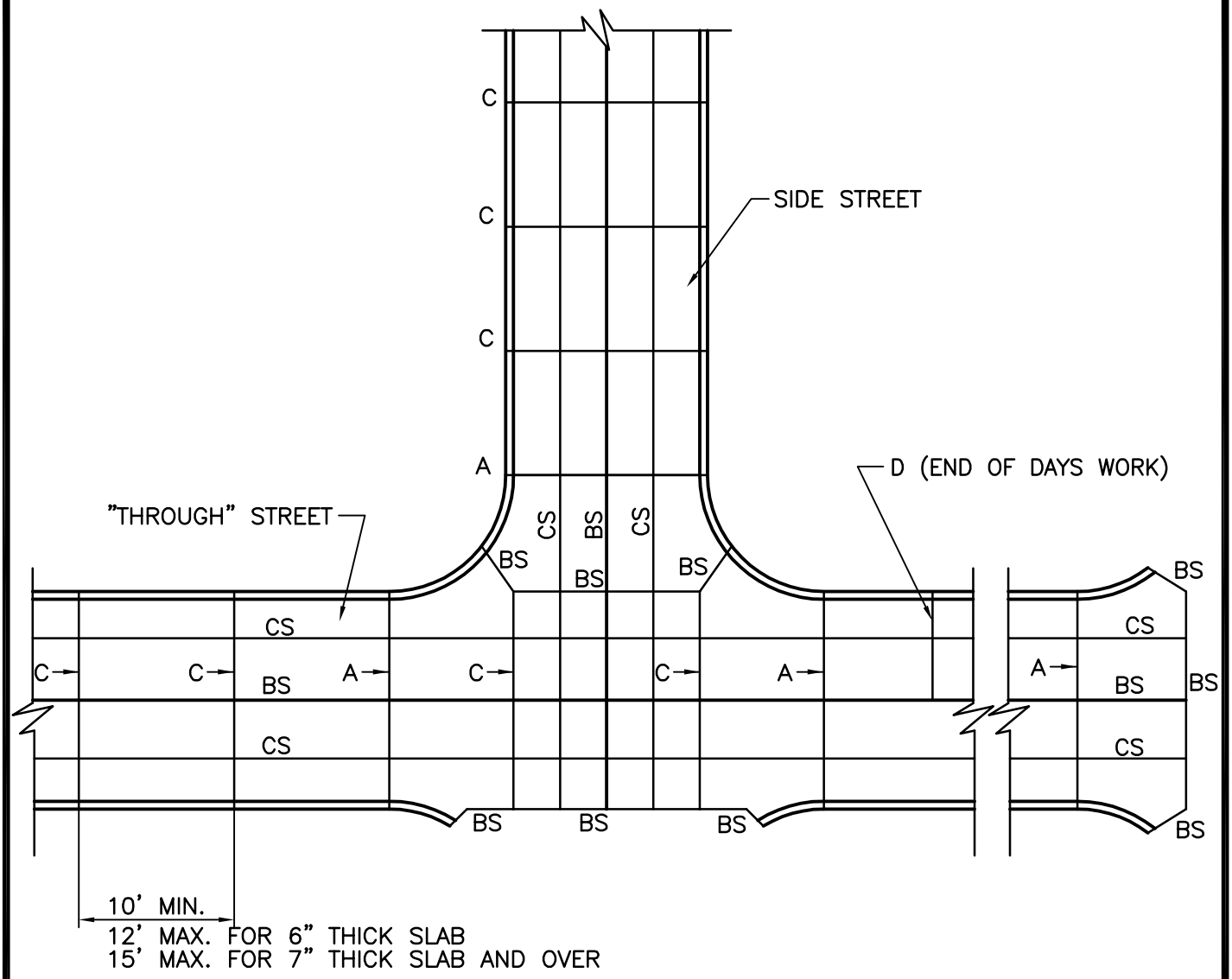

JOINT LOCATION PLAN

NOTE:

1. TRANSVERSE TYPE C JOINTS SHALL BE SAWED AS SOON AS CONCRETE CAN WITHSTAND RAVELING, JOINTS SHALL BE CLEANED AND FILLED WITH BITUMINOUS COMPOUND IMMEDIATELY FOLLOWING SAWING.
2. INSTALL TYPE A EXPANSION JOINTS AT INTERSECTIONS, AND AT STRUCTURES.
3. INSTALL TYPE A EXPANSION JOINTS AT PC & PT OF CURVES. WITH DEFLECTION ANGLE OF GREATER THAN 30°.
4. INSTALL TYPE A EXPANSION JOINT AT BULB OF CUL-DE-SAC.
5. INSTALL TYPE A EXPANSION JOINT AT 500' SPACING MAXIMUM.
6. USE TYPE D JOINT AT END OF DAYS WORK.

Approved	6/01/16 Date	City of Columbia Public Works Department	JOINT DETAILS (P.C. Concrete Pavement)	200.01A
Revisions				

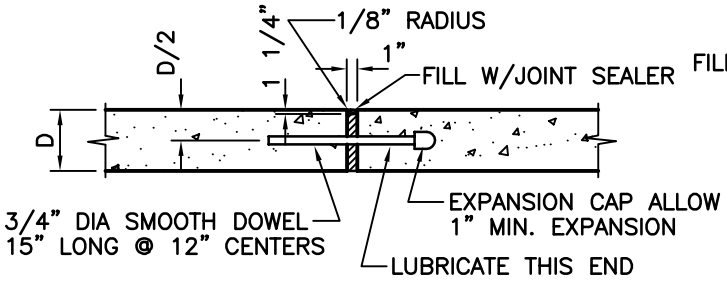

TYPE A
EXPANSION JOINT

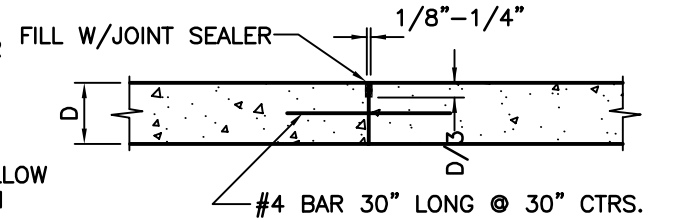

TYPE Ⓒ – CONSTRUCTED WITHOUT TIE BAR
TYPE ⓒⓢ – REQUIRES TIE BAR

TYPE C & CS
SAWED

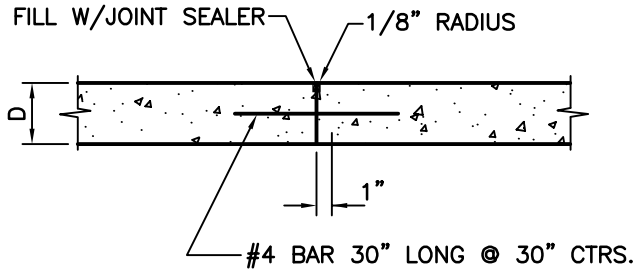

TYPE BS
KEYED CONSTRUCTION JOINT
(With Steel)

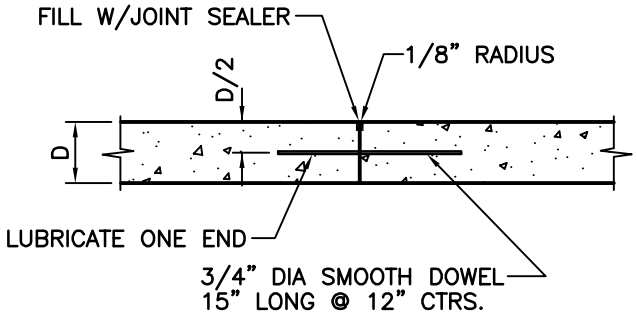

TYPE D
TRANSVERSE CONSTRUCTION JOINT

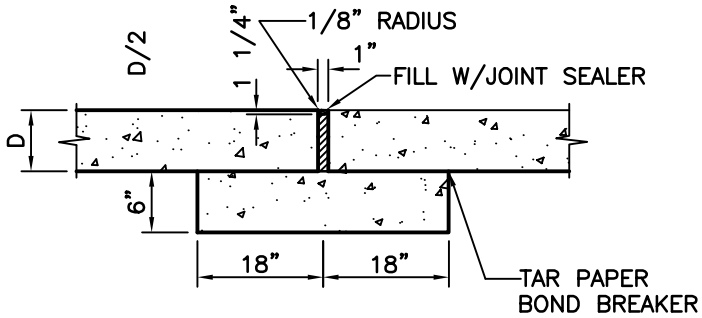

TYPE A ALTERNATE
CONCRETE SILL

NOTE: ALL DRILLED DOWEL BARS SHALL BE EXPOXIED.

Approved	6/01/16 Date	City of Columbia Public Works Department	JOINT DETAILS (P.C. Concrete Pavement)	200.01B
Revisions				

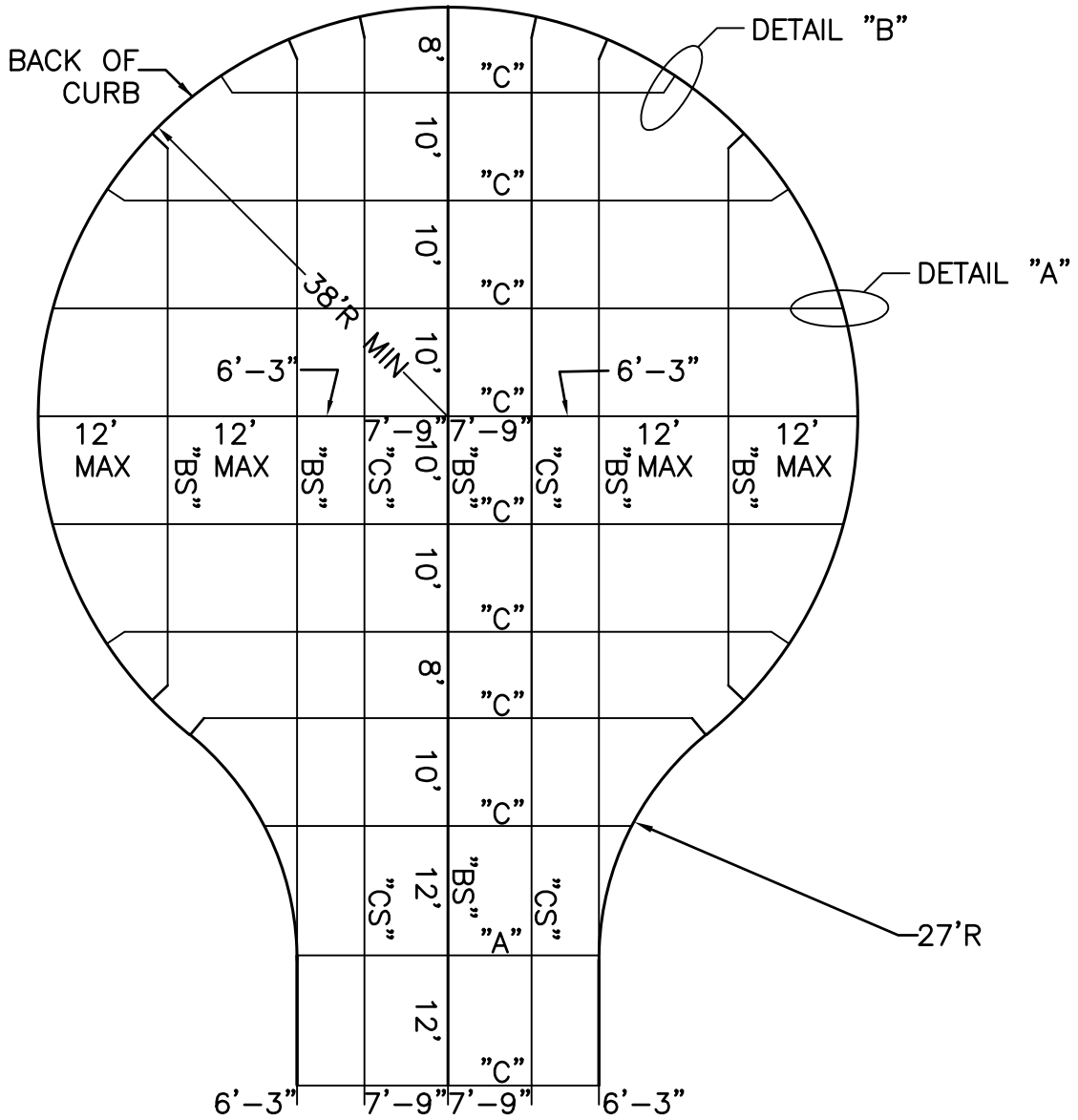

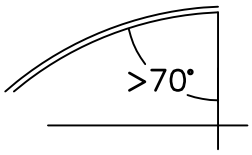

DETAIL "A"

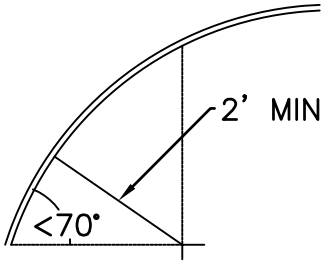

DETAIL "B"

NOTE:
1. OTHER CUL-DE-SAC CONFIGURATIONS TO BE APPROVED BY THE DIRECTOR OF PUBLIC WORKS.

Approved	6/01/16 Date	City of Columbia Public Works Department	JOINTING DETAIL Residential Cul-de-sac	205.01
Revisions				

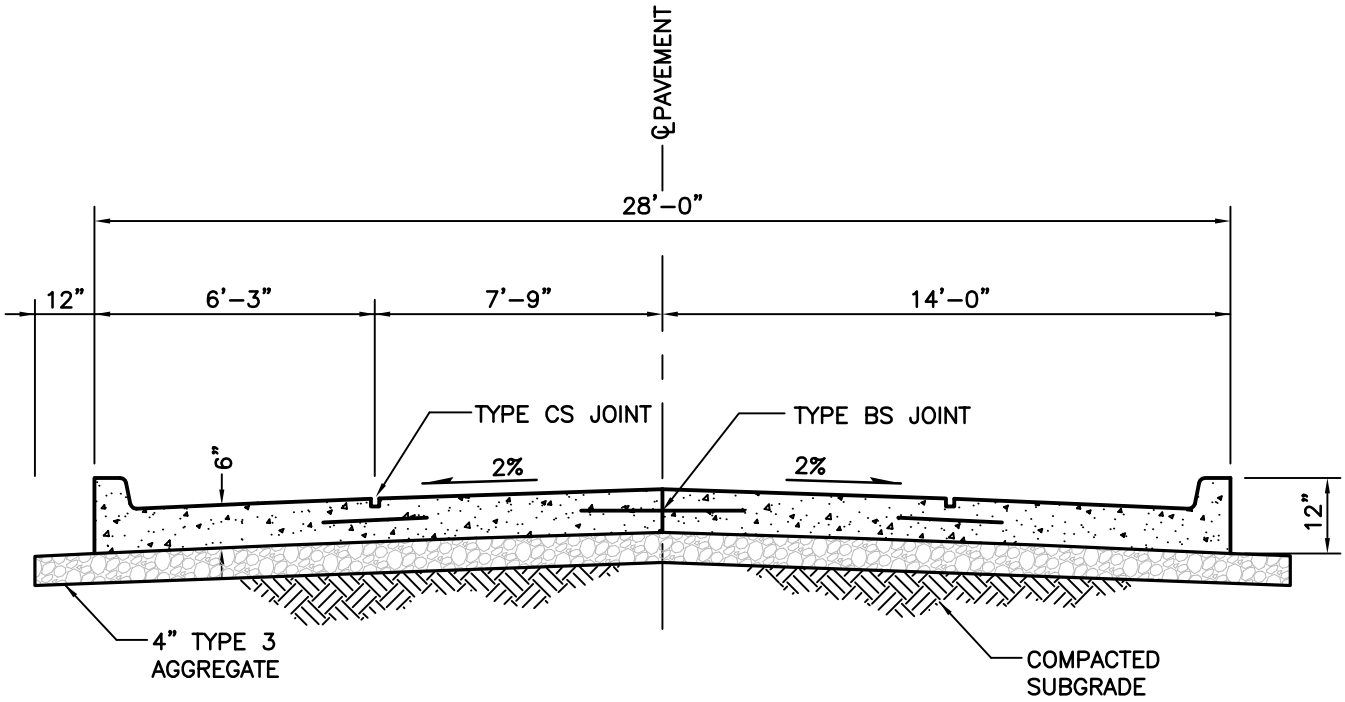

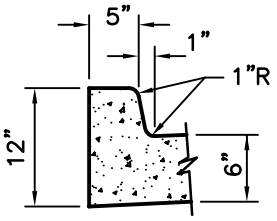

INTEGRAL CURB SECTION

NOTES:

1. ALL P.C. CONCRETE SHALL BE MoDOT PAVEMENT CONCRETE.
2. SEE DETAIL 200.01 FOR JOINT DETAILS.

Approved 6/01/16 Date	City of Columbia Public Works Department	RESIDENTIAL STREET (Concrete Pavement)	210.01
Revisions			

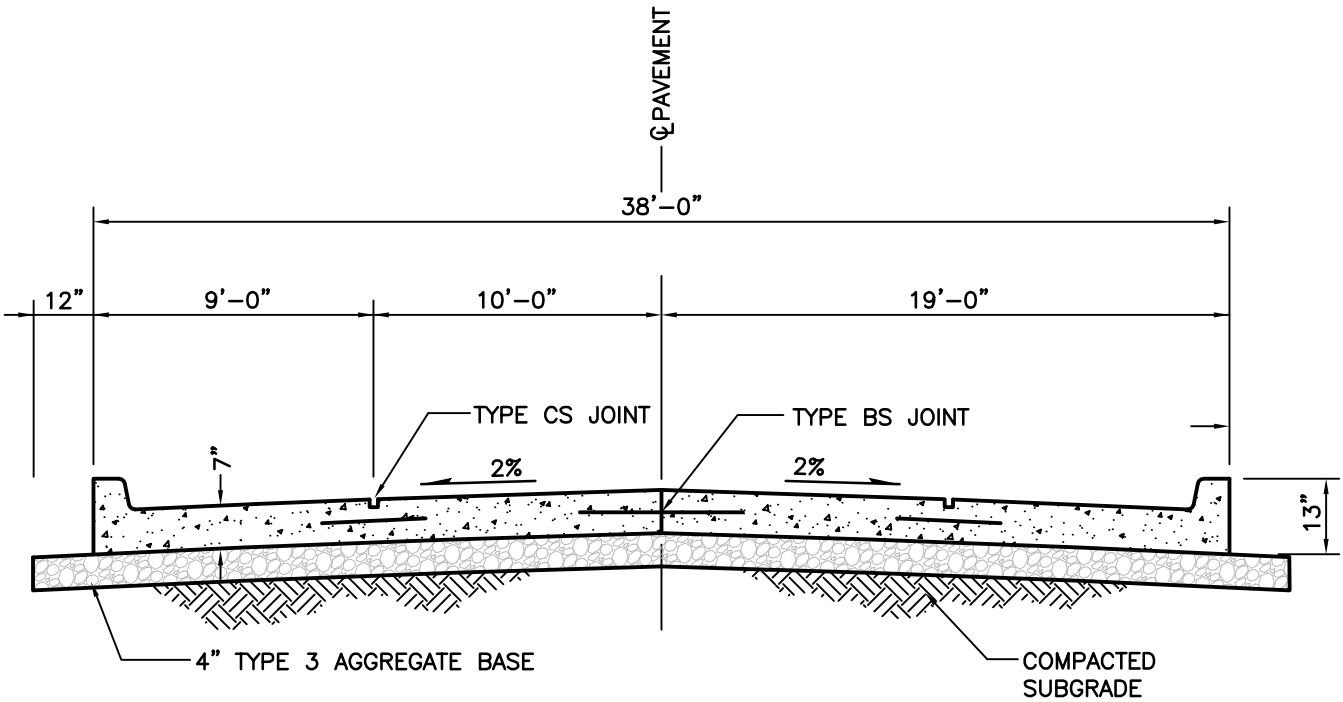

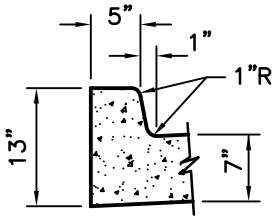

INTEGRAL CURB SECTION

NOTES:

1. ALL P.C. CONCRETE SHALL BE MoDOT PAVEMENT CONCRETE
2. SEE DETAIL 200.01 FOR JOINT DETAILS.

Approved	6/01/16 Date	City of Columbia Public Works Department	COLLECTOR STREET (Concrete Pavement)	220.01
Revisions				

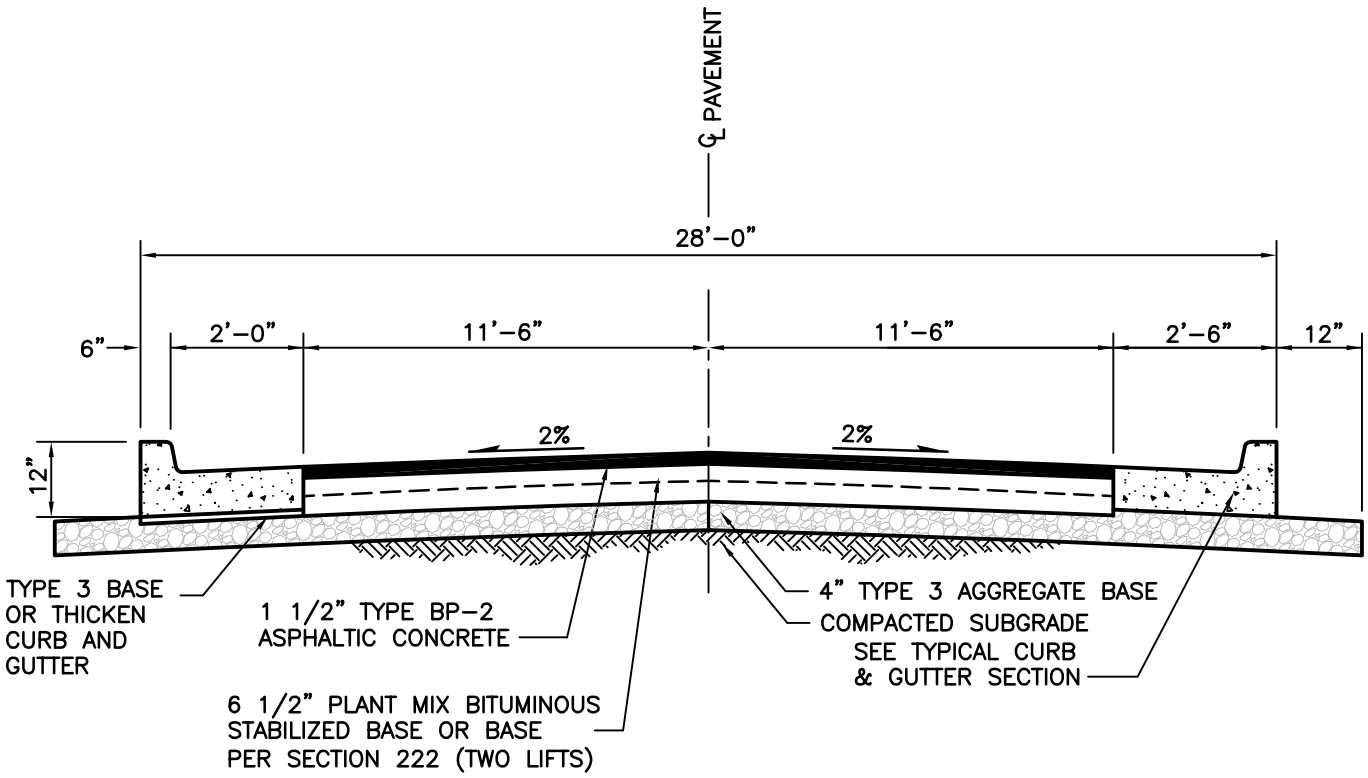

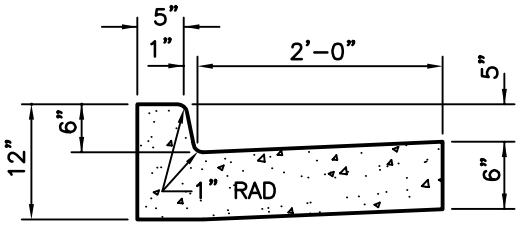

TYPICAL CURB AND GUTTER SECTION

NOTES:

1. ALL P.C. CONCRETE SHALL BE MoDOT PAVEMENT CONCRETE.
2. INSTALL 1/2" EXPANSION JOINTS IN CURB AND GUTTER SECTION AT P.C. AND P.T. OF CURB RADIUS OF INTERSECTIONS AND EVERY 150'.
3. INSTALL SAW JOINTS IN CURB AND GUTTER SECTION AT 10 FT. MAXIMUM SPACING, SEAL WITH BITUMASTIC JOINT SEALANT.
4. 4% PARABOLIC CROWN IS ACCEPTABLE IN LIEU OF 2% NORMAL CROWN.

Approved	6/01/16 Date	City of Columbia Public Works Department	RESIDENTIAL STREET (Asphaltic Pavement)	310.01
Revisions				

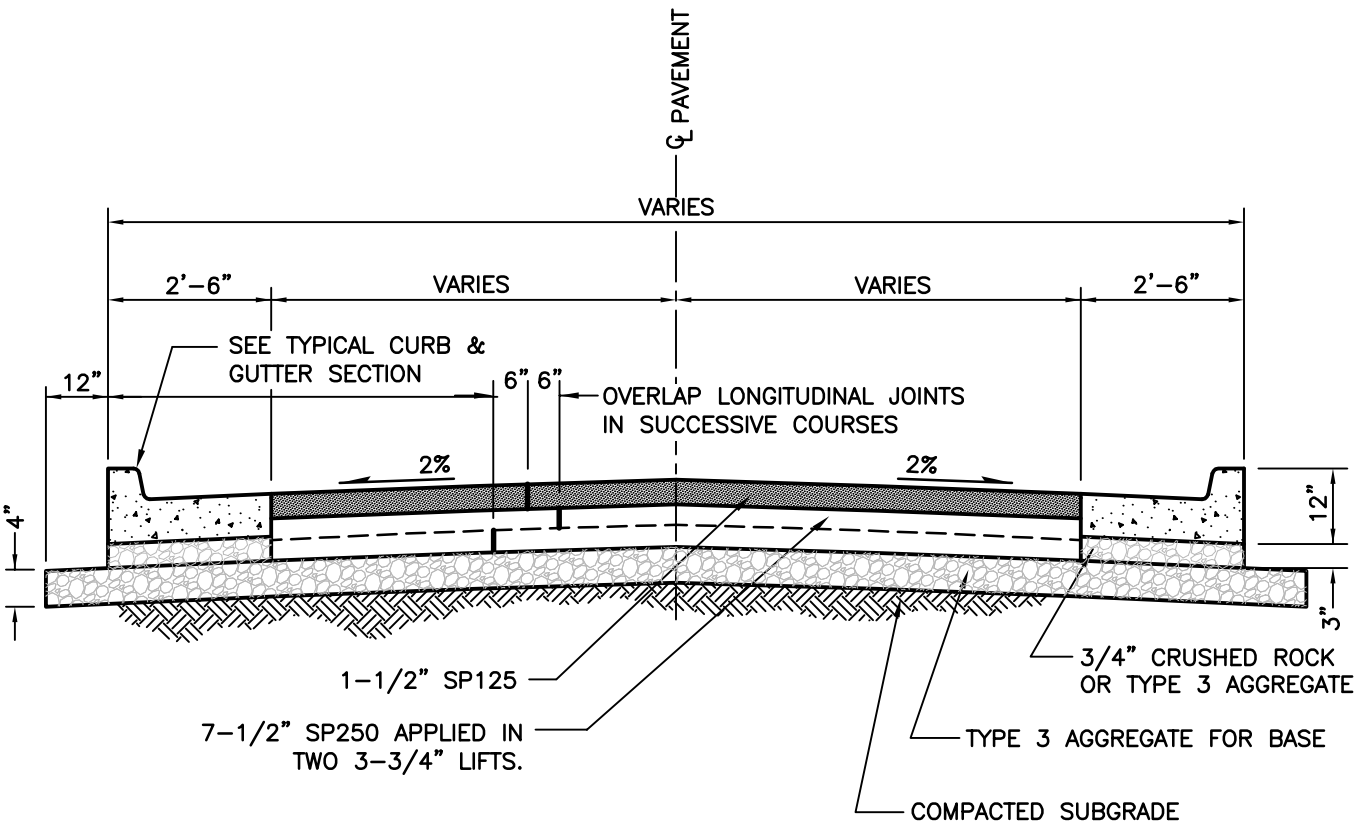

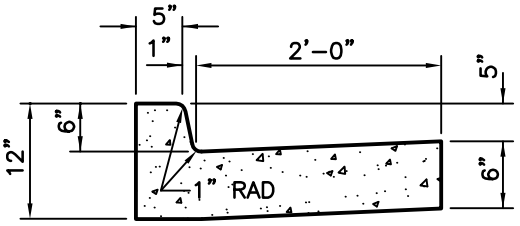

TYPICAL CURB AND GUTTER SECTION

NOTES:

1. ALL P.C. CONCRETE SHALL BE MoDOT PAVEMENT CONCRETE.
2. INSTALL 1/2" EXPANSION JOINTS IN CURB AND GUTTER SECTION AT P.C. AND P.T. OF CURB RADIUS OF INTERSECTIONS AND EVERY 150'.
3. INSTALL SAW JOINTS IN CURB AND GUTTER SECTION AT 10 FT. MAXIMUM SPACING, SEAL WITH BITUMASTIC JOINT SEALANT.
4. 4% PARABOLIC CROWN IS ACCEPTABLE IN LIEU OF 2% NORMAL CROWN.

Approved	6/01/16 Date	City of Columbia Public Works Department	COLLECTOR STREET (Asphaltic Pavement)	320.01
Revisions				

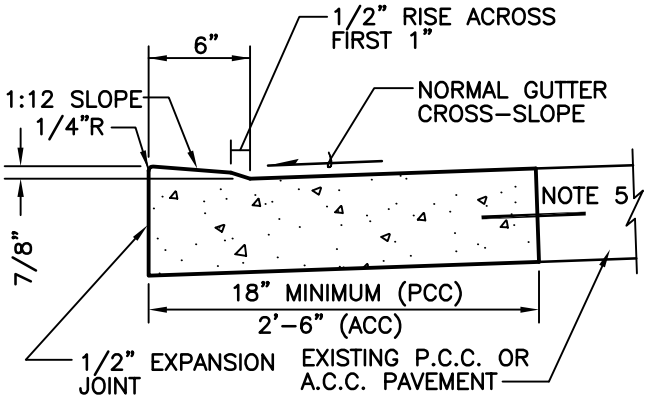

SIDEWALK RAMP CURB
(Alternate)

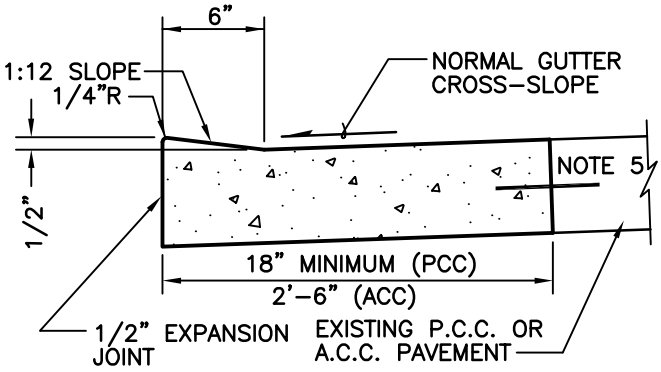

SIDEWALK RAMP CURB

PCC PAVEMENT NOTES:

1. CONCRETE SHALL BE MoDOT PAVEMENT CONCRETE.
2. PAVEMENT THICKNESS SHALL MATCH EXISTING. BASE SHALL MATCH EXISTING
3. EXPANSION JOINTS AND CONTRACTION JOINTS SHALL BE PLACED AT LOCATIONS SIMILAR TO THE PAVEMENT WHICH WAS REMOVED.
4. CURB EDGE SHALL BE TOOLED WITH 1/4" RADIUS
5. WHERE EXISTING PAVEMENT IS P.C.C., LOW CURB REPLACEMENT SHALL BE DOWELLED INTO EXISTING. 12" LONG #4 BARS AT 24" CTR. ALL DRILLED DOWEL BARS SHALL BE EXPOXIED.

ACC PAVEMENT NOTES:

1. CONCRETE SHALL BE MoDOT PAVEMENT CONCRETE.
2. GUTTER THICKNESS SHALL MATCH EXISTING, BASE SHALL MATCH EXISTING
3. EXPANSION JOINTS AND CONTRACTION JOINTS SHALL BE PLACED AT LOCATIONS SIMILAR TO THE CURB AND GUTTER WHICH WAS REMOVED.
4. CURB EDGE SHALL BE TOOLED WITH 1/4" RADIUS

Approved	6/01/16 Date	City of Columbia Public Works Department	CURB DETAILS (Sidewalk Ramp)	400.01
Revisions				

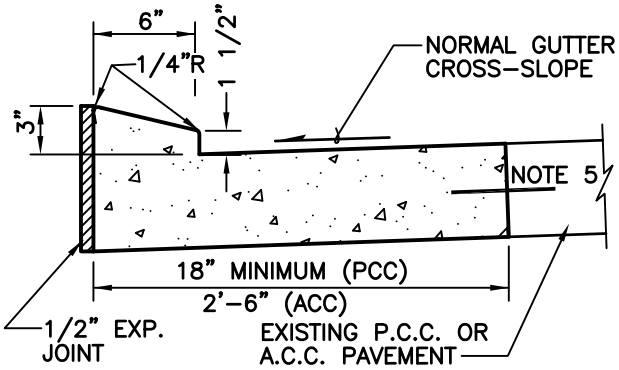

RESIDENTIAL DRIVEWAY CURB

MAXIMUM RISE (PREFERED)

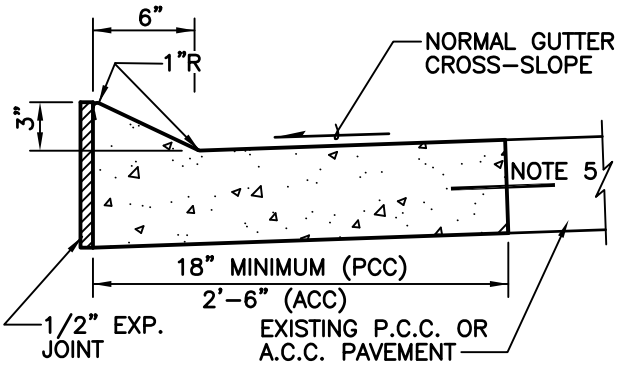

RESIDENTIAL DRIVEWAY CURB

MAXIMUM RISE (ALTERNATE)

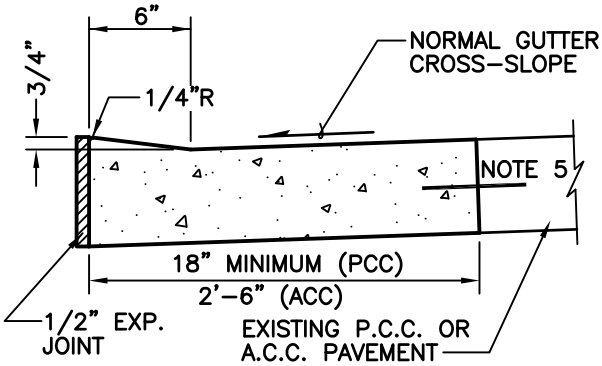

RESIDENTIAL DRIVEWAY CURB

MINIMUM RISE

GENERAL NOTES:

1. ELEVATION OF DRIVEWAY AT R.O.W. LINE REQUIRED TO BE A MINIMUM OF 6" ABOVE GUTTER ELEVATION. VERIFY R.O.W. WIDTH AND ALLOWABLE DRIVEWAY SLOPES PRIOR TO CONSTRUCTING MINIMUM RISE DRIVEWAY CURB.
2. ALTERNATE CURB PROFILES WHICH FALL WITHIN THE MINIMUM RISE AND MAXIMUM RISE CURBS SHOWN WILL BE APPROVED. SLOPE ACROSS RESIDENTIAL DRIVEWAY CURB TOP MUST BE AT LEAST 1/2" IN 6" TOWARD THE STREET.
3. HORIZONTAL SAWING OF CURB IS ALLOWED AS AN ALTERNATIVE TO REMOVING AND REPLACING STANDARD CURB. HORIZONTAL SAWING MACHINE AND METHOD REQUIRES PRIOR APPROVAL. HORIZONTAL SAWING IS NOT ALLOWED ON CITY BID PROJECTS.

PCC PAVEMENT NOTES:

1. CONCRETE SHALL BE MoDOT PAVEMENT CONCRETE.
2. PAVEMENT THICKNESS SHALL MATCH EXISTING. BASE SHALL MATCH EXISTING
3. EXPANSION JOINTS AND CONTRACTION JOINTS SHALL BE PLACED AT LOCATIONS SIMILAR TO THE PAVEMENT WHICH WAS REMOVED.
4. CURB EDGE SHALL BE TOOLED WITH 1/4" RADIUS
5. WHERE EXISTING PAVEMENT IS P.C.C., LOW CURB REPLACEMENT SHALL BE DOWELLED INTO EXISTING. 12" LONG #4 BARS AT 24" CTR. ALL DRILLED DOWEL BARS SHALL BE EXPOXIED.

ACC PAVEMENT NOTES:

1. CONCRETE SHALL BE MoDOT PAVEMENT CONCRETE.
2. GUTTER THICKNESS SHALL MATCH EXISTING, BASE SHALL MATCH EXISTING
3. EXPANSION JOINTS AND CONTRACTION JOINTS SHALL BE PLACED AT LOCATIONS SIMILAR TO THE CURB AND GUTTER WHICH WAS REMOVED.
4. CURB EDGE SHALL BE TOOLED WITH 1/4" RADIUS

Approved	6/01/16 Date	City of Columbia Public Works Department	CURB DETAILS (Residential Driveway)	400.02
Revisions				

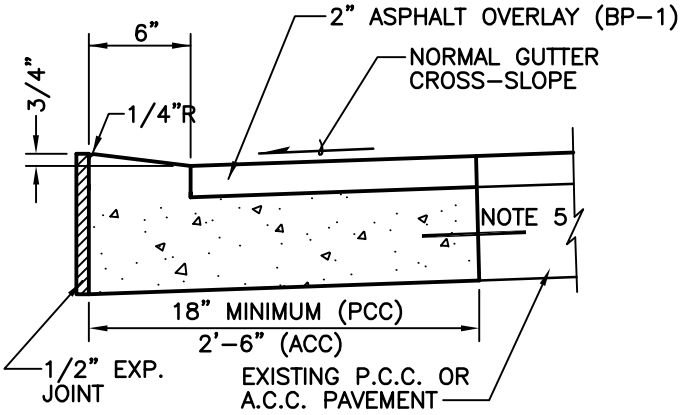

COMMERCIAL DRIVEWAY CURB AT ASPHALT OVERLAID STREET

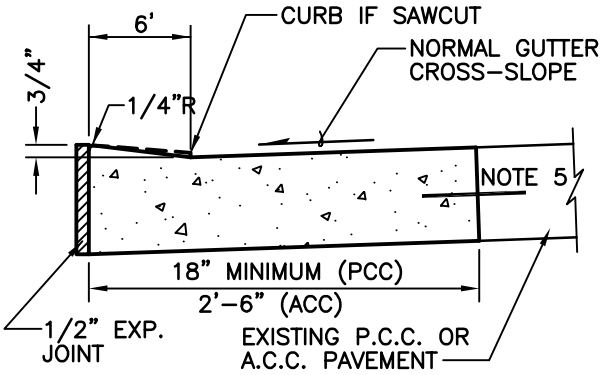

COMMERCIAL DRIVEWAY CURB

HORIZONTAL SAWING OF CURB IS ALLOWED AS AN ALTERNATIVE TO REMOVING AND REPLACING STANDARD CURB. HORIZONTAL SAWING MACHINE AND METHOD REQUIRES PRIOR APPROVAL. HORIZONTAL SAWING IS NOT ALLOWED ON CITY BID PROJECTS.

PCC PAVEMENT NOTES:

1. CONCRETE SHALL BE MoDOT PAVEMENT CONCRETE.
2. PAVEMENT THICKNESS SHALL MATCH EXISTING. BASE SHALL MATCH EXISTING
3. EXPANSION JOINTS AND CONTRACTION JOINTS SHALL BE PLACED AT LOCATIONS SIMILAR TO THE PAVEMENT WHICH WAS REMOVED.
4. CURB EDGE SHALL BE TOOLED WITH 1/4" RADIUS
5. WHERE EXISTING PAVEMENT IS P.C.C., LOW CURB REPLACEMENT SHALL BE DOWELLED INTO EXISTING. 12" LONG #4 BARS AT 24" CTR. ALL DRILLED DOWEL BARS SHALL BE EXPOXIED.

ACC PAVEMENT NOTES:

1. CONCRETE SHALL BE MoDOT PAVEMENT CONCRETE.
2. GUTTER THICKNESS SHALL MATCH EXISTING, BASE SHALL MATCH EXISTING
3. EXPANSION JOINTS AND CONTRACTION JOINTS SHALL BE PLACED AT LOCATIONS SIMILAR TO THE CURB AND GUTTER WHICH WAS REMOVED.
4. CURB EDGE SHALL BE TOOLED WITH 1/4" RADIUS

Approved	6/01/16 Date	City of Columbia Public Works Department	CURB DETAILS (Commercial Driveway)	400.03
Revisions				

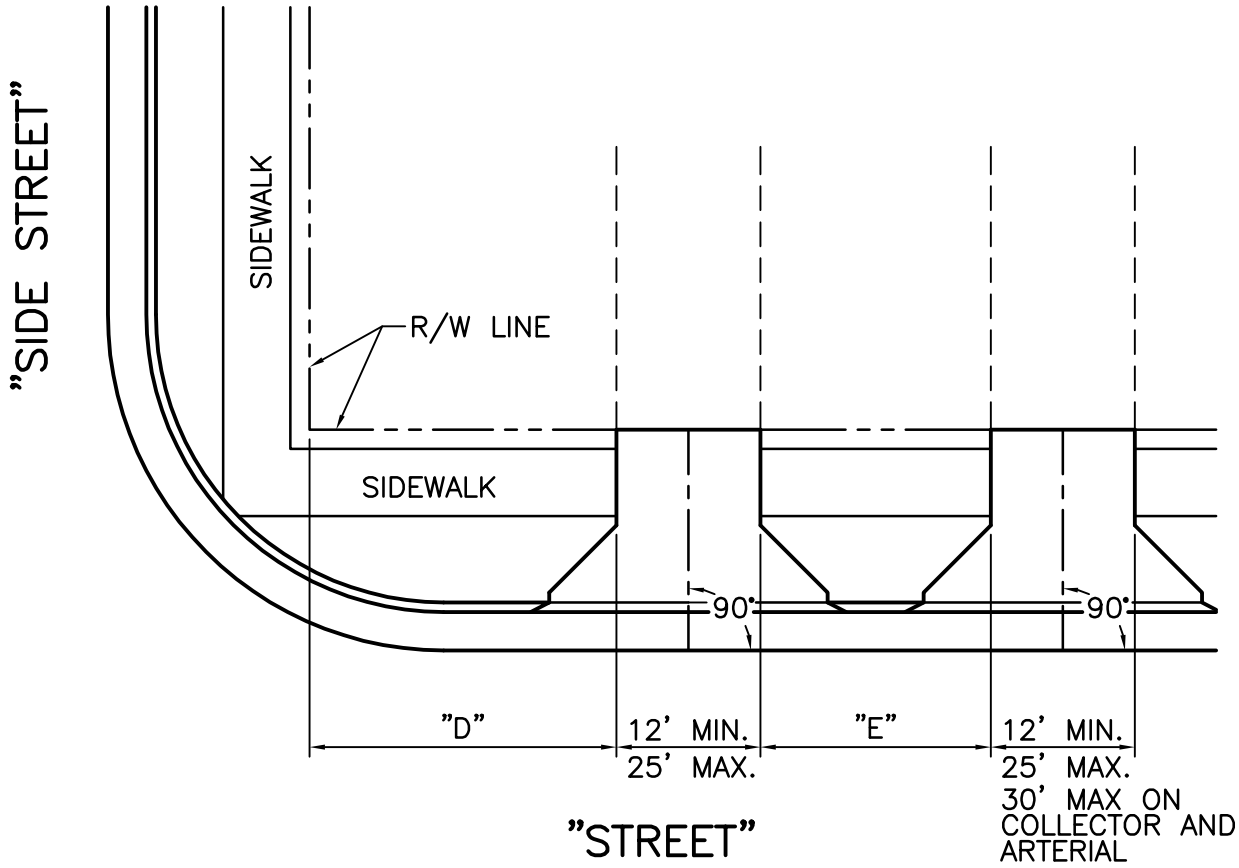

TYPE OF STREET	MINIMUM DISTANCES	
	"D"	"E"
LOCAL RESIDENTIAL	20'	—
LOCAL NON-RESIDENTIAL	20'	20'
COLLECTOR	30'	30'
ARTERIAL	50'	75'

Approved 6/01/16 Date

Revisions

City of Columbia
Public Works Department

DRIVEWAY LOCATIONS

410.01

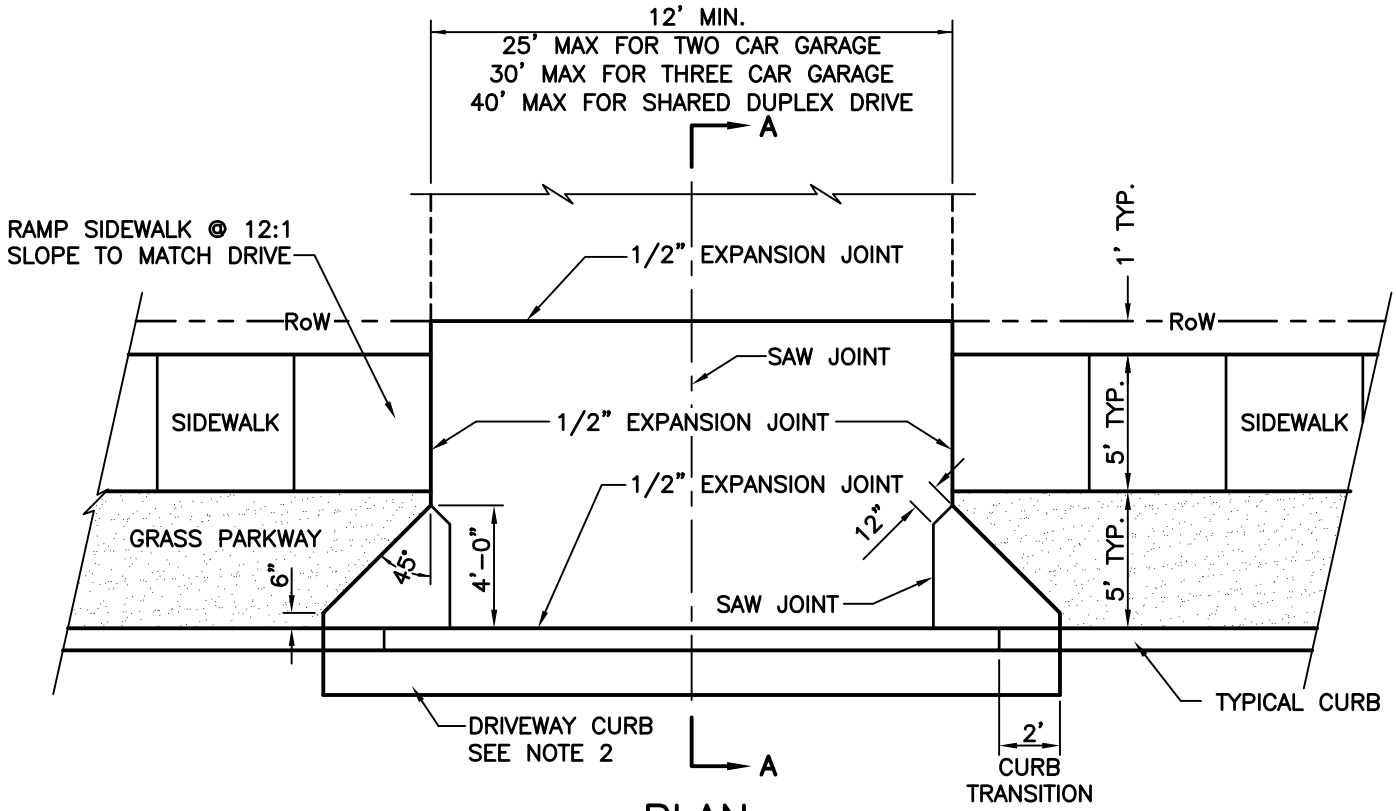

PLAN

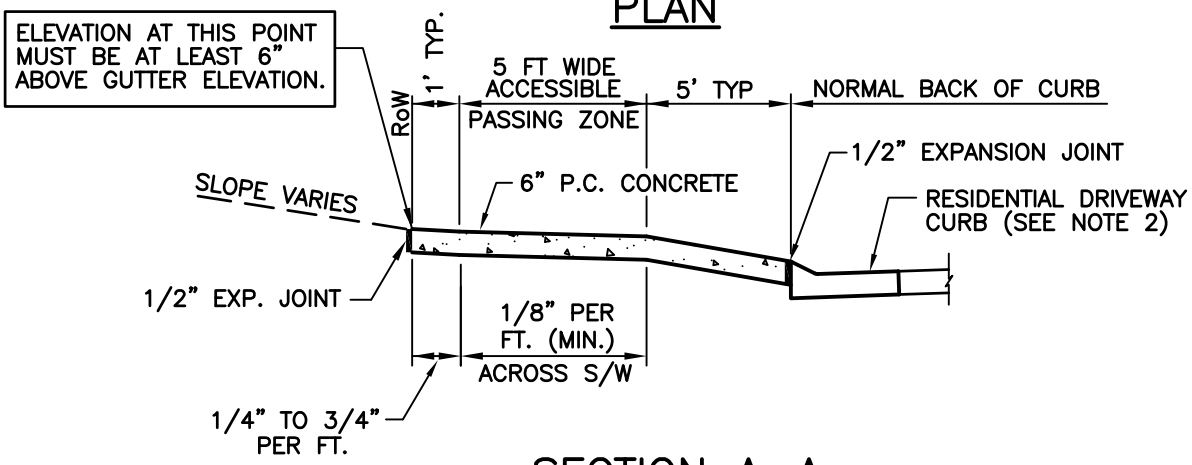

SECTION A–A

NOTES:

1. DRIVEWAY APPROACH SHALL BE 6" THICK MoDOT PAVEMENT CONCRETE ON COMPACTED SUBGRADE.
2. REPLACE STANDARD CURB & GUTTER SECTION WITH DRIVEWAY CURB SECTION. SEE DETAIL 400.02.
3. EXPANSION JOINT SHALL BE 1/2" PREFORMED CORK OR BITUMINOUS EXPANSION JOINT MATERIAL.
4. ALL DRIVEWAY APPROACHES SHALL SLOPE TOWARD THE STREET.
5. ALL DRIVEWAY APPROACHES SHALL BE CONSTRUCTED TO ACCOMMODATE SIDEWALKS. (EXISTING AND FUTURE) STANDARD SIDEWALK LOCATION IS 1 FT OFF OF RoW LINE
6. DRIVEWAY APPROACH SHALL PROVIDE A MINIMUM 5' WIDE ACCESSIBLE SIDEWALK PASSING ZONE.
7. DRIVEWAY SLOPE ACROSS ACCESSIBLE SIDEWALK PASSING ZONE IS 1/8" PER FT. CROSS SLOPE SHALL NOT EXCEED 2.00%.
8. MINIMIZE SIDEWALK WARPING ADJACENT TO DRIVEWAY APPROACH.
9. GREENSPACE SLOPE WITHIN RIGHT OF WAY SHALL NOT EXCEED 3/4" PER FOOT.
10. DRIVEWAY MAY BE REINFORCED AT OWNER'S OPTION. ON CITY BID PROJECTS DO NOT REINFORCE.
11. MEASURE FROM TOP OF CURB.

Approved	6/01/16 Date	City of Columbia Public Works Department	DRIVEWAY (Residential, 28' street)	410.02A
Revisions				

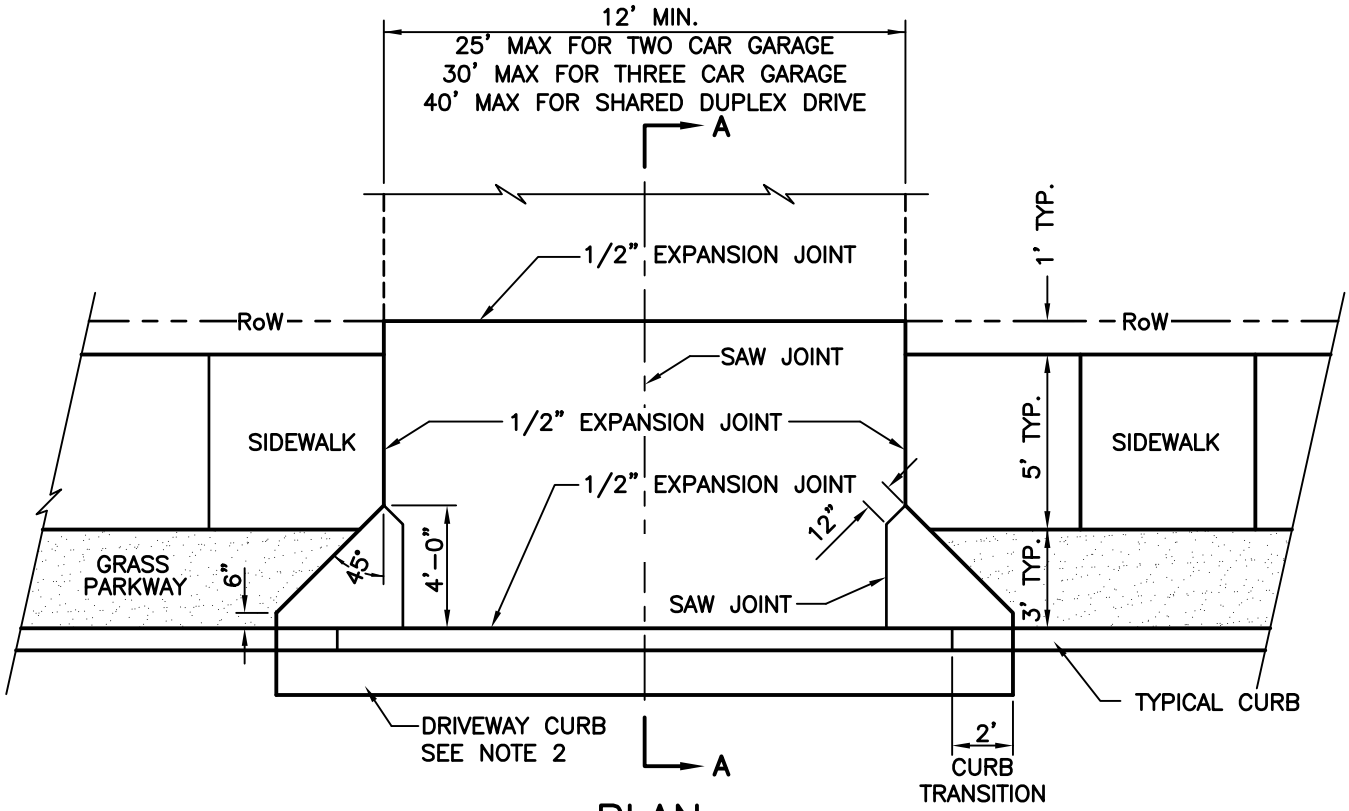

PLAN

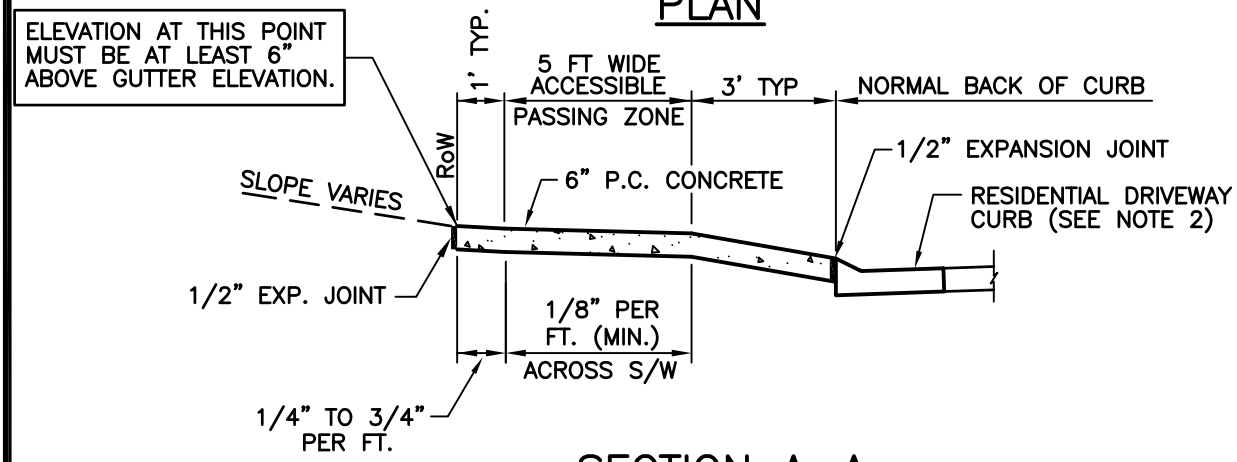

SECTION A–A

NOTES:

1. DRIVEWAY APPROACH SHALL BE 6" THICK MoDOT PAVEMENT CONCRETE ON COMPACTED SUBGRADE.
2. REPLACE STANDARD CURB & GUTTER SECTION WITH DRIVEWAY CURB SECTION. SEE DETAIL 400.02.
3. EXPANSION JOINT SHALL BE 1/2" PREFORMED CORK OR BITUMINOUS EXPANSION JOINT MATERIAL.
4. ALL DRIVEWAY APPROACHES SHALL SLOPE TOWARD THE STREET.
5. ALL DRIVEWAY APPROACHES SHALL BE CONSTRUCTED TO ACCOMMODATE SIDEWALKS. (EXISTING AND FUTURE) STANDARD SIDEWALK LOCATION IS 1 FT OFF OF RoW LINE
6. DRIVEWAY APPROACH SHALL PROVIDE A MINIMUM 5' WIDE ACCESSIBLE SIDEWALK PASSING ZONE.
7. DRIVEWAY SLOPE ACROSS ACCESSIBLE SIDEWALK PASSING ZONE IS 1/8" PER FT. CROSS SLOPE SHALL NOT EXCEED 2.00%.
8. MINIMIZE SIDEWALK WARPING ADJACENT TO DRIVEWAY APPROACH.
9. GREENSPACE SLOPE WITHIN RIGHT OF WAY SHALL NOT EXCEED 3/4" PER FOOT.
10. DRIVEWAY MAY BE REINFORCED AT OWNER'S OPTION. ON CITY BID PROJECTS DO NOT REINFORCE.
11. MEASURE FROM TOP OF CURB.

Approved	6/01/16 Date	City of Columbia Public Works Department	DRIVEWAY (Residential, 32' street)	410.02B
Revisions				

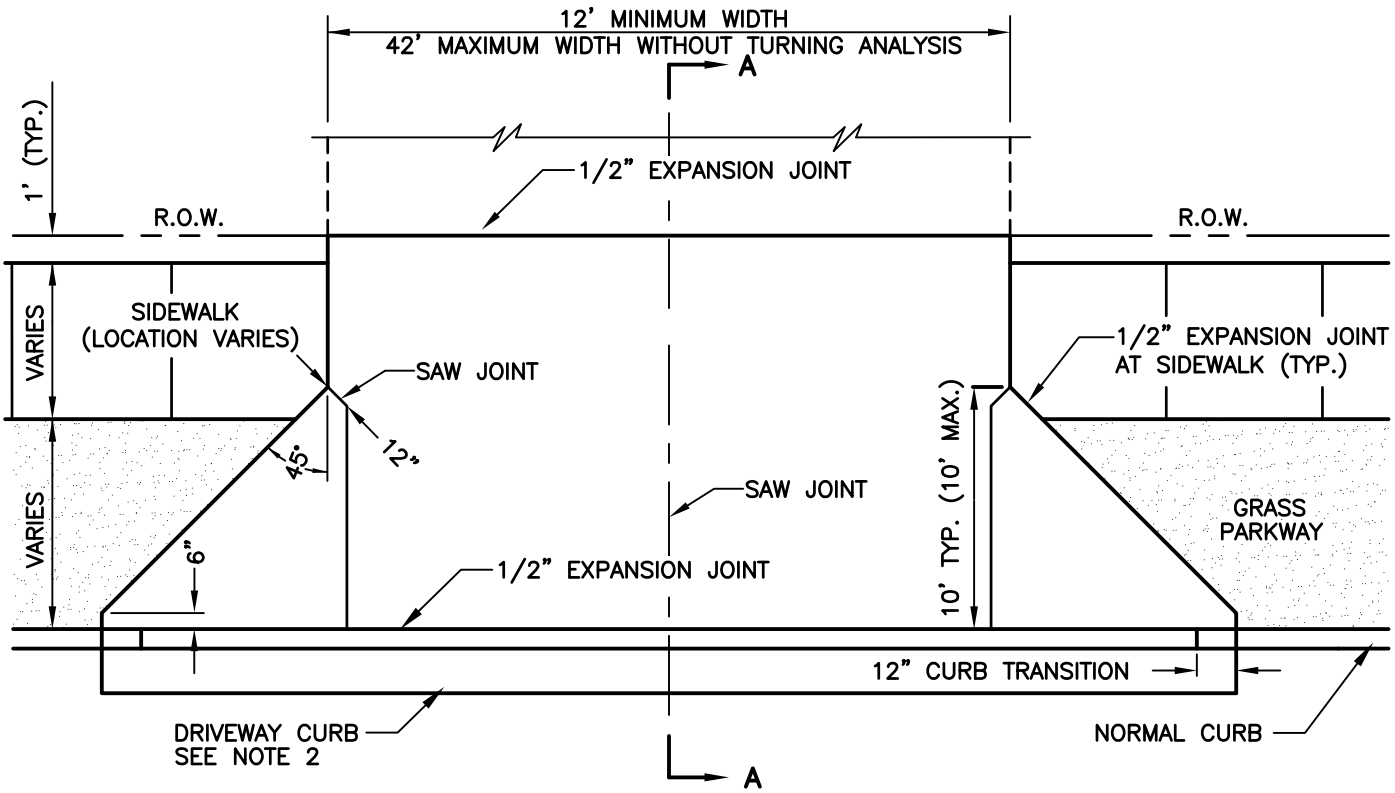

PLAN

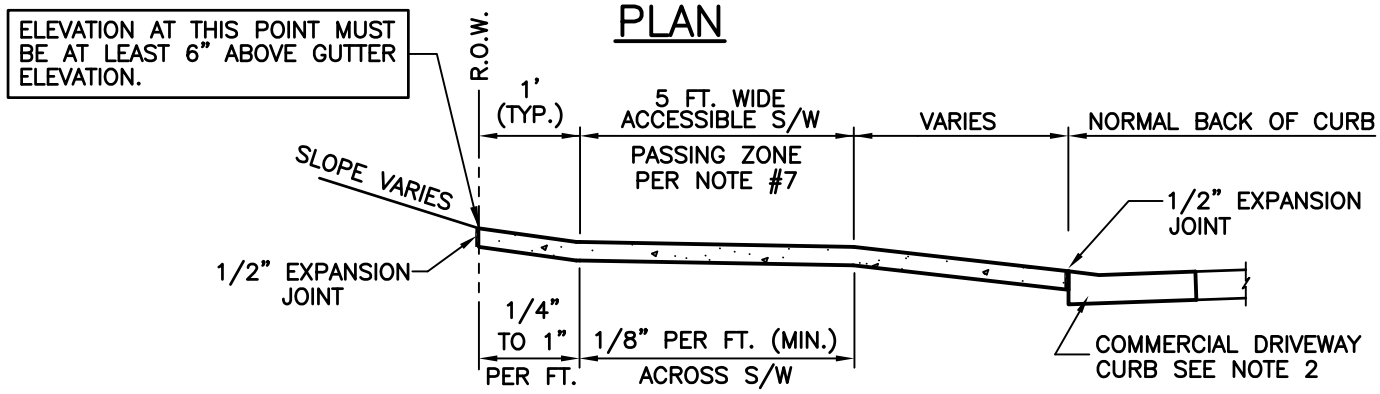

SECTION A–A

NOTES:

1. DRIVEWAY APPROACH SHALL BE 7" THICK MoDOT PAVEMENT CONCRETE.
2. REPLACE STANDARD CURB & GUTTER SECTION WITH DRIVEWAY CURB SECTION. SEE DETAIL 400.03.
3. EXPANSION JOINT SHALL BE 1/2" PREFORMED CORK OR BITUMINOUS EXPANSION JOINT MATERIAL.
4. ALL DRIVEWAY APPROACHES SHALL SLOPE TOWARD THE STREET.
5. ALL DRIVEWAY APPROACHES SHALL BE CONSTRUCTED TO ACCOMMODATE SIDEWALKS. (EXISTING AND FUTURE) STANDARD SIDEWALK LOCATION IS 1 FOOT OFF OF RIGHT OF WAY LINE.
6. DRIVEWAY APPROACH SHALL PROVIDE A MINIMUM 5' WIDE ACCESSIBLE SIDEWALK PASSING ZONE.
7. DRIVEWAY SLOPE ACROSS ACCESSIBLE SIDEWALK PASSING ZONE IS 1/8" PER FT. CROSS SLOPE SHALL NOT EXCEED 2.00%.
8. MINIMIZE SIDEWALK WARPING ADJACENT TO DRIVEWAY APPROACH.
9. GREENSPACE SLOPE WITHIN RIGHT OF WAY SHALL NOT EXCEED 3/4" PER FOOT.
10. DRIVEWAY MAY BE REINFORCED AT OWNER'S OPTION. ON CITY BID PROJECTS DO NOT REINFORCE.
11. MEASURE FROM TOP OF CURB.

Approved	6/01/16 Date	City of Columbia Public Works Department	DRIVEWAY (Commercial)	410.03
Revisions				

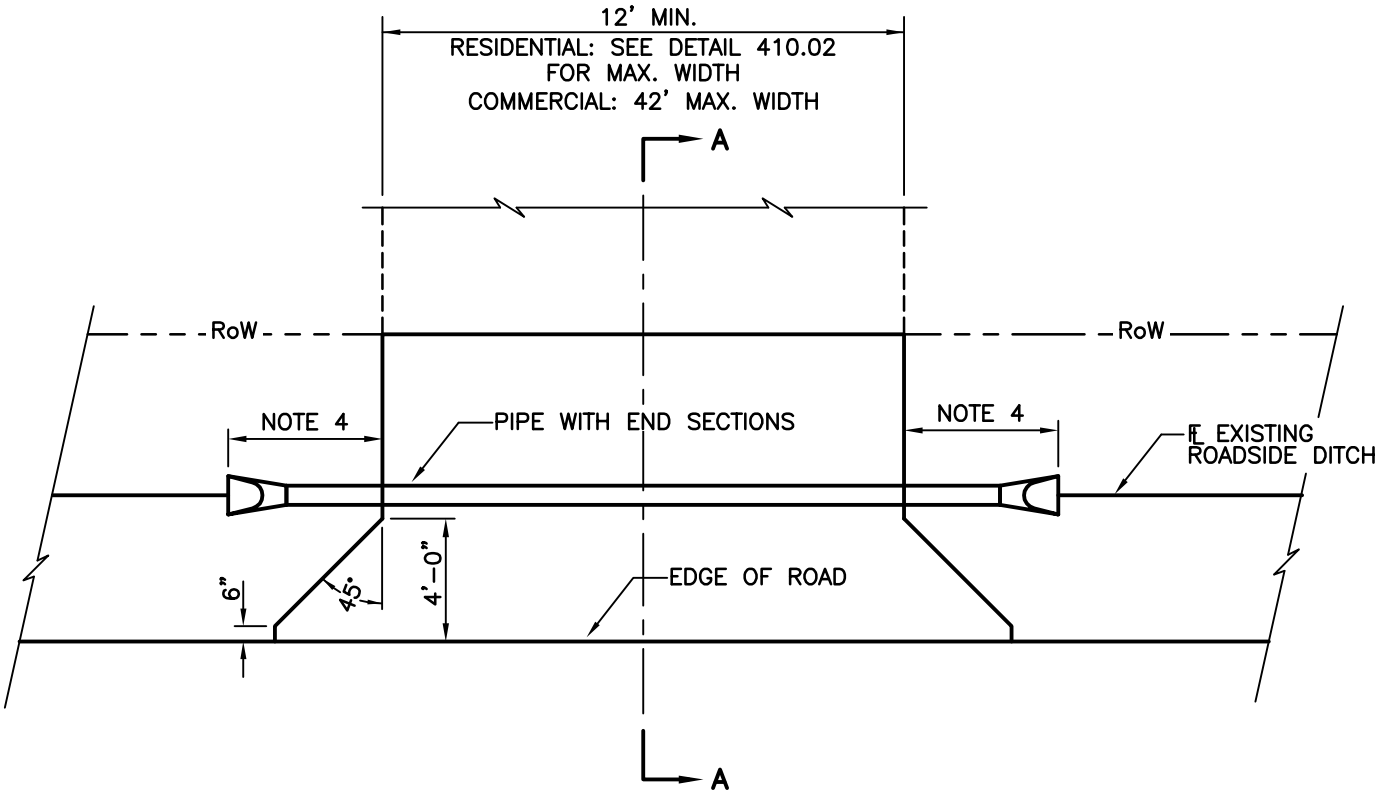

PLAN

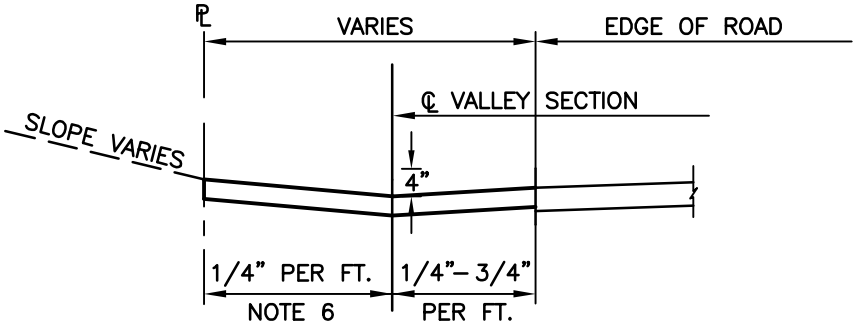

SECTION A–A

NOTES:

1. DRIVEWAY APPROACH SHALL BE 6" FULL DEPTH ASPHALTIC CEMENT CONCRETE OR MoDOT PAVEMENT CONCRETE
2. VALLEY SECTION REQUIRED, VALLEY SHALL BE 4" BELOW EDGE OF ROAD
3. PIPE UNDER DRIVEWAY SHALL BE SIZED TO CARRY 10 YR STORM, MINIMUM 12" DIAMETER.
4. PIPE LENGTH BASED ON 3:1 FILL SLOPE, USE FLARED END SECTION OR BEVEL END OF PIPE TO MATCH 3:1 SLOPE. HEADWALLS NOT ALLOWED.
5. WHERE THE ROADSIDE DITCH AT A DRIVEWAY DRAINS LESS THAN 10,000 SQ. FT. THE PIPE CAN BE OMITTED, INCREASE VALLEY SECTION DEPTH TO 6".
6. DRIVEWAYS SHALL PROVIDE FOR FUTURE SIDEWALKS AND ROAD IMPROVEMENTS, DRIVEWAY SLOPE BETWEEN VALLEY AND R.O.W. LINE SHALL NOT EXCEED 1/4" PER FOOT.

Approved	6/01/16 Date	City of Columbia Public Works Department	DRIVEWAY (Unimproved Street)	410.04
Revisions				

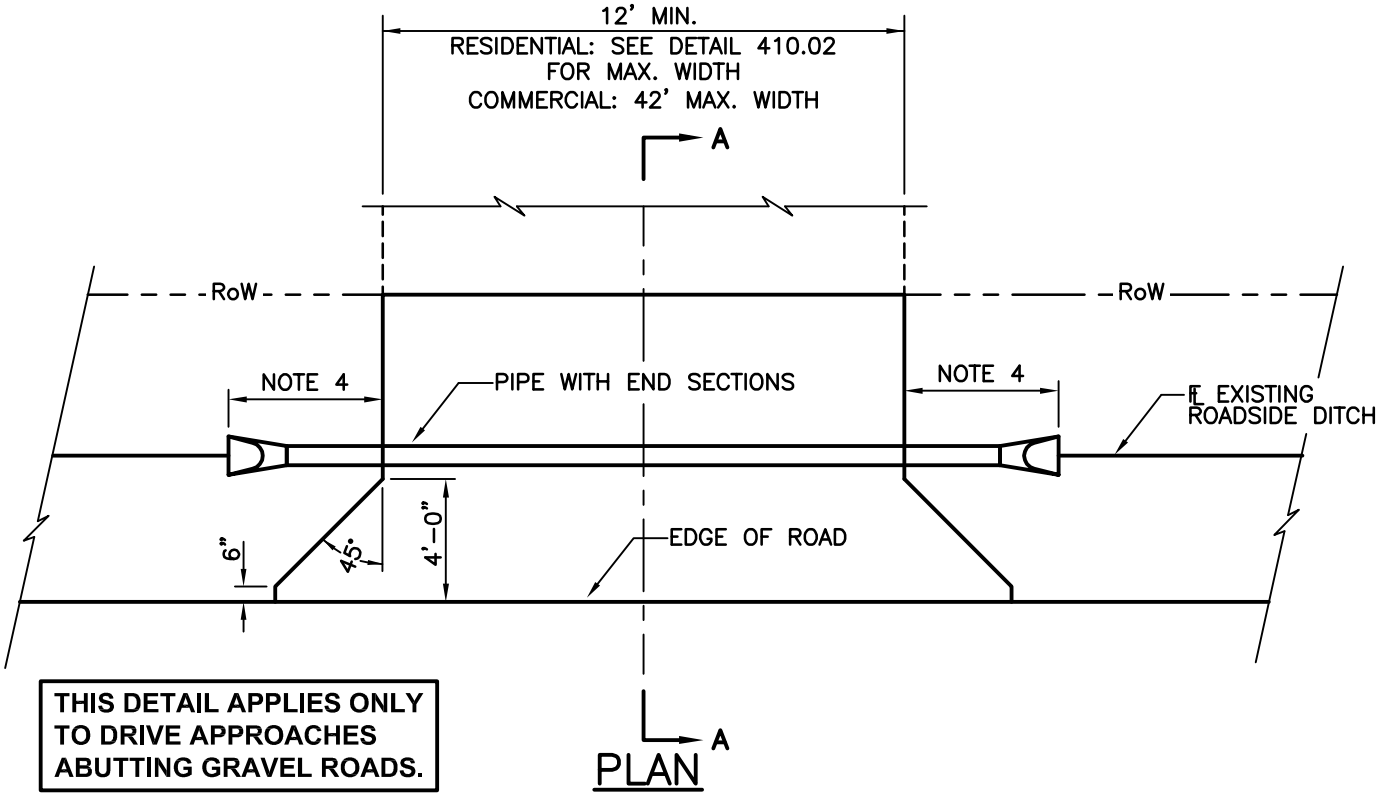

THIS DETAIL APPLIES ONLY TO DRIVE APPROACHES ABUTTING GRAVEL ROADS.

PLAN

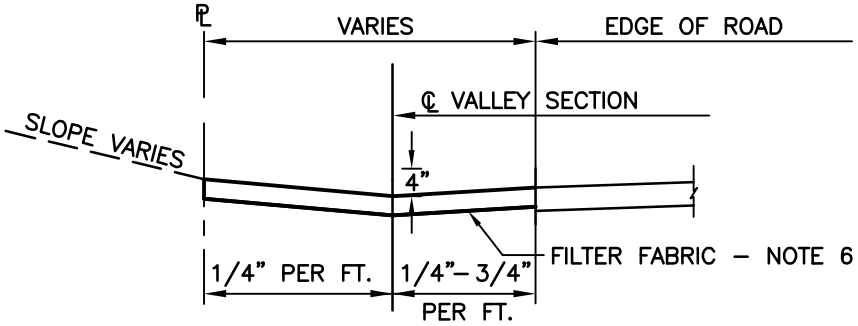

SECTION A–A

NOTE:

1. DRIVEWAY APPROACH SHALL BE A MINIMUM OF 8" OF 2 1/2" MINUS ROCK OR SHALL BE A MINIMUM OF 5" OF HOT MIX ASPHALT OR 6" OF MoDOT PAVEMENT CONCRETE. IN THE CASE OF A HARD SURFACED APPROACH, THE APPROACH SHALL BE SET BACK A MINIMUM OF 12" BEYOND EDGE OF ROAD.
2. VALLEY SECTION REQUIRED, VALLEY SHALL BE 4" BELOW EDGE OF ROAD
3. PIPE UNDER DRIVEWAY SHALL BE SIZED TO CARRY 10 YR STORM, MINIMUM 12" DIAMETER.
4. PIPE LENGTH BASED ON 3:1 FILL SLOPE, USE FLARED END SECTION OR BEVEL END OF PIPE TO MATCH 3:1 SLOPE. HEADWALLS NOT ALLOWED.
5. WHERE THE ROADSIDE DITCH AT A DRIVEWAY DRAINS LESS THAN 10,000 SQ. FT. THE PIPE CAN BE OMITTED, INCREASE VALLEY SECTION DEPTH TO 6".
6. INSTALL HEAVY GAUGE FILTER FABRIC (MIRAFI 180N OR EQUAL) UNDER ENTIRE DRIVE APPROACH.

Approved	6/01/16 Date	City of Columbia Public Works Department	DRIVEWAY (Gravel Roadways)	410.05
Revisions				

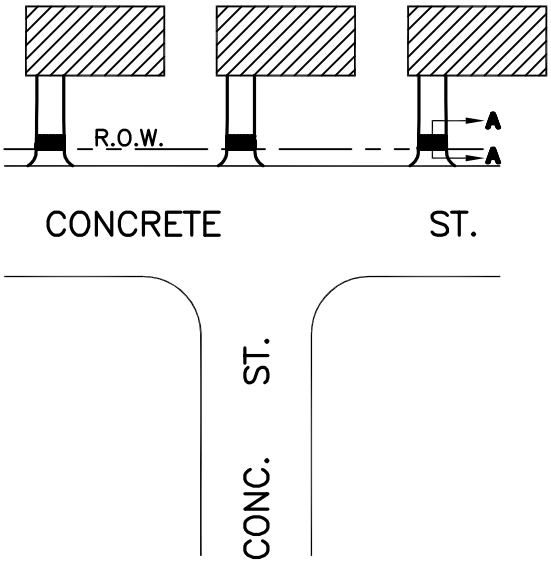

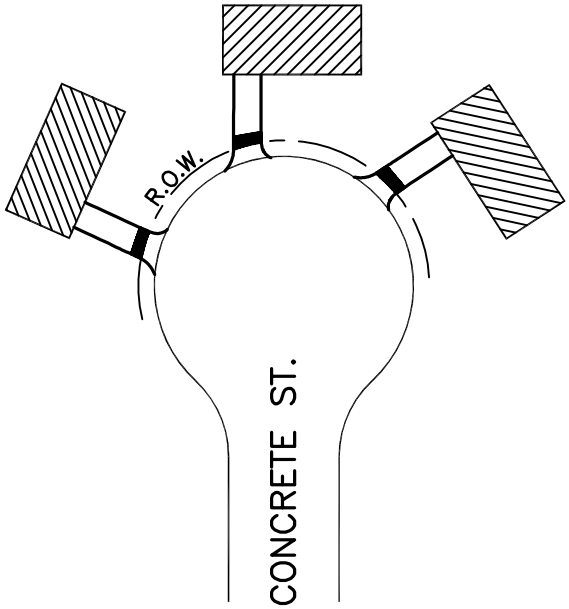

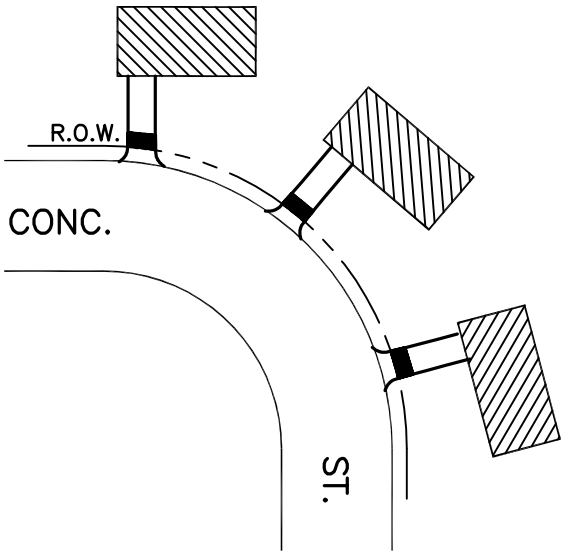

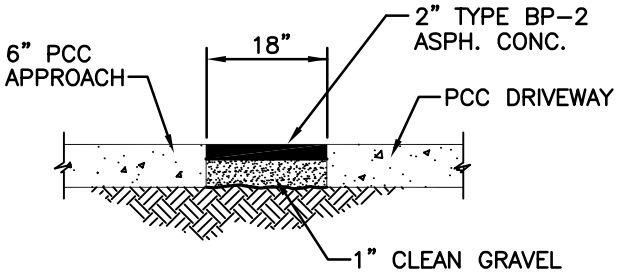

SECTION A–A

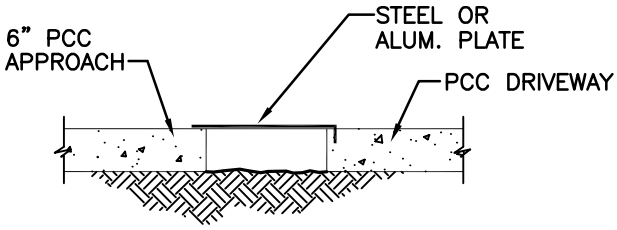

alt. SECTION A–A

THE MOVEMENT OVER TIME OF CONCRETE STREETS DUE PRIMARILY TO THE THERMAL EXPANSION AND CONTRACTION PROPERTIES OF CONCRETE HAS CAUSED DAMAGE TO PRIVATE RESIDENCES IN SOME NEW SUB–DIVISIONS IN COLUMBIA WHERE CONCRETE STREETS ARE USED.

IN ORDER TO CONTROL SUCH DAMAGE, THE CITY IS RECOMMENDING THE USE OF ONE OF THE JOINT DETAILS ABOVE WHEN THE DRIVEWAY IS LOCATED AS DEPICTED ON THIS DRAWING.

Approved	6/01/16 Date	City of Columbia Public Works Department	ALTERNATE EXPANSION JOINTS FOR DRIVEWAYS ON P.C.C. STREETS	410.06
Revisions				

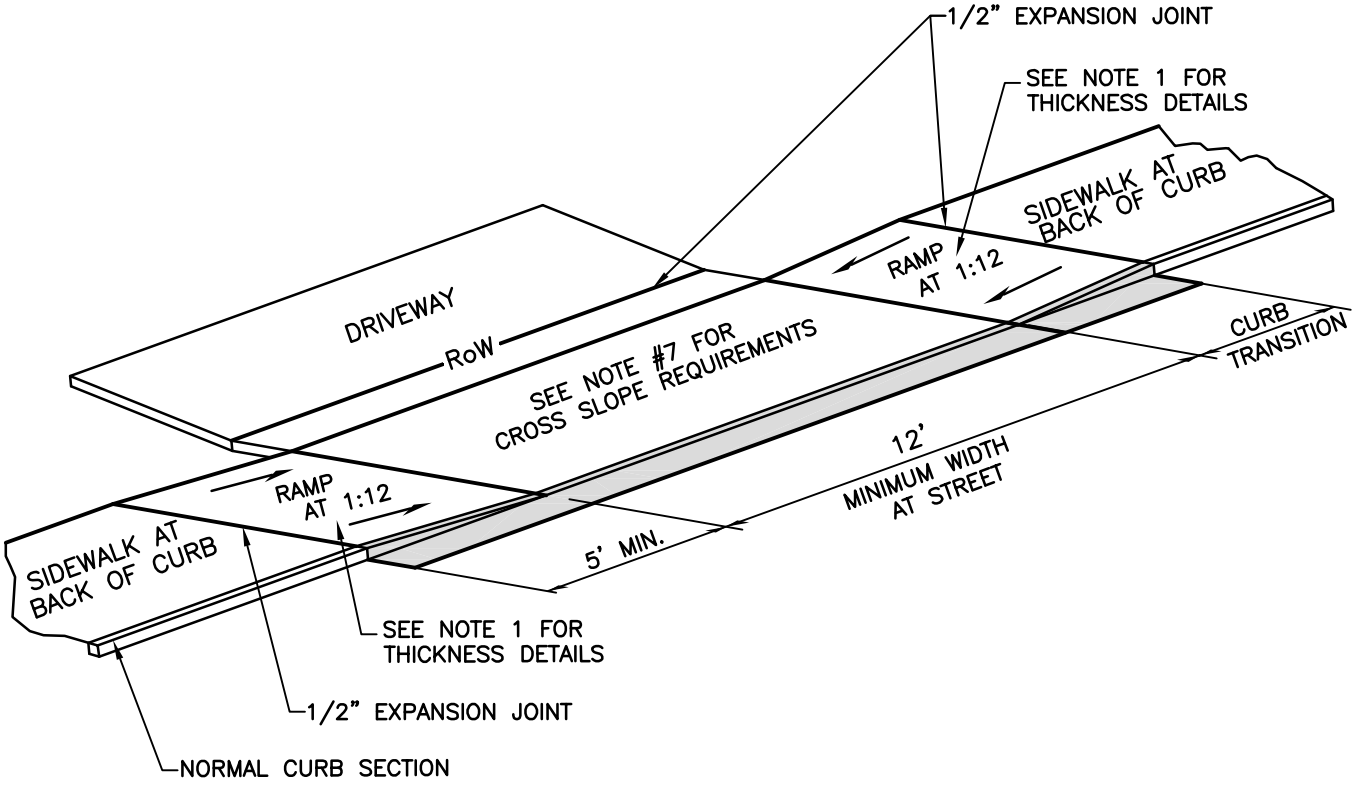

NOTE:

1. RAMP SHALL BE 6" THICK MoDOT PAVEMENT CONCRETE FOR RESIDENTIAL, 7" THICK MoDOT PAVEMENT CONCRETE FOR COMMERCIAL.
2. EXPANSION JOINT SHALL BE 1/2" PREFORMED CORK OR BITUMINOUS EXPANSION JOINT MATERIAL.
3. DRIVEWAY CROSS SLOPE SHALL NOT EXCEED 2.00%.
4. ALL SLOPES ARE MEASURED FROM THE HORIZONTAL.
5. REPLACE STANDARD CURB SECTION DRIVEWAY CURB SECTION – DETAIL 400.02 OR 400.03
6. RAMP LENGTH IS DEPENDENT UPON 1:12 MAX. SLOPE AT 5' MINIMUM TRANSITION AREA. USE FLATTER WHEN POSSIBLE.
7. A PEDESTRIAN ACCESSIBLE ROUTE SHALL BE PROVIDED THAT IS 4'–0" WIDE MINIMUM WITH A MINIMUM CROSS SLOPE OF 1/8" PER FOOT AND MAXIMUM CROSS SLOPE OF 2.00%.
8. DRIVEWAY MAY BE REINFORCED AT OWNERS OPTION. ON CITY BID PROJECTS DO NOT REINFORCE.

Approved	6/01/16 Date	City of Columbia Public Works Department	SIDEWALK DRIVEWAY DETAIL Sidewalk at Back of Curb	410.07
Revisions				

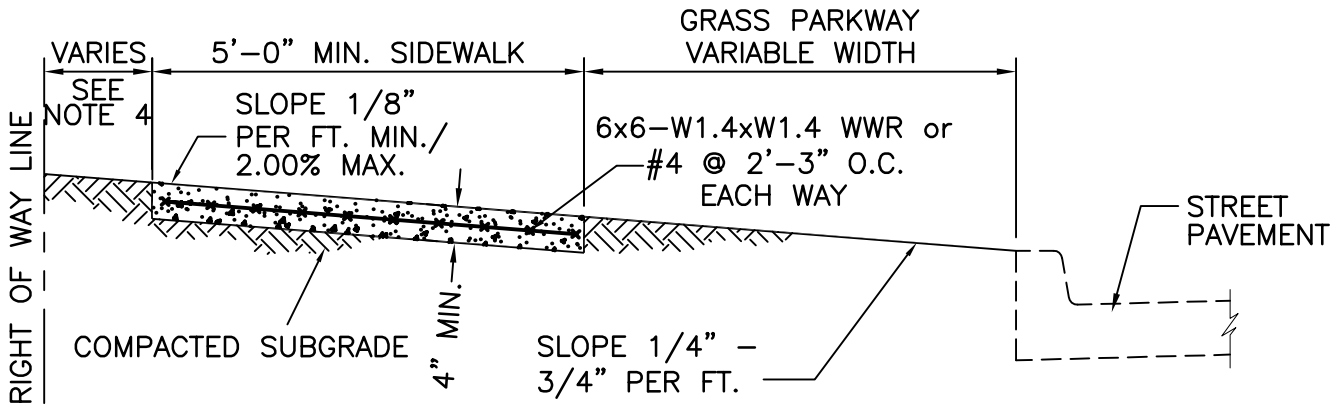

SIDEWALK WITH GRASS PARKWAY

NOTE:

1. SIDEWALK SHALL BE 4" THICK MoDOT PAVEMENT CONCRETE.
2. INSTALL 1/2" EXPANSION JOINTS AT INTERSECTIONS, RAMPS, STRUCTURES, DRIVEWAY APPROACHES, OR EVERY 100'.
3. INSTALL TRANSVERSE SAW JOINTS AT SPACING EQUAL TO SIDEWALK WIDTH.
4. STANDARD SIDEWALK PLACEMENT IS 12" FROM RIGHT OF WAY LINE.
5. NO STEEL TO BE PLACED THROUGH EXPANSION JOINT.
6. SIDEWALK CROSS SLOPE SHALL NOT EXCEED 2.00%.
7. DAMAGED SIDEWALK MUST BE PINNED TO EXISTING SIDEWALK.
8. WWR OR REBAR SHALL BE ACCURATELY PLACED AND FIRMLY HELD IN PLACE DURING CONCRETE PLACEMENT BY APPROVED METHODS, SEE SECTION 238.9.

Approved	6/01/16 Date	City of Columbia Public Works Department	SIDEWALK	420.01
Revisions				

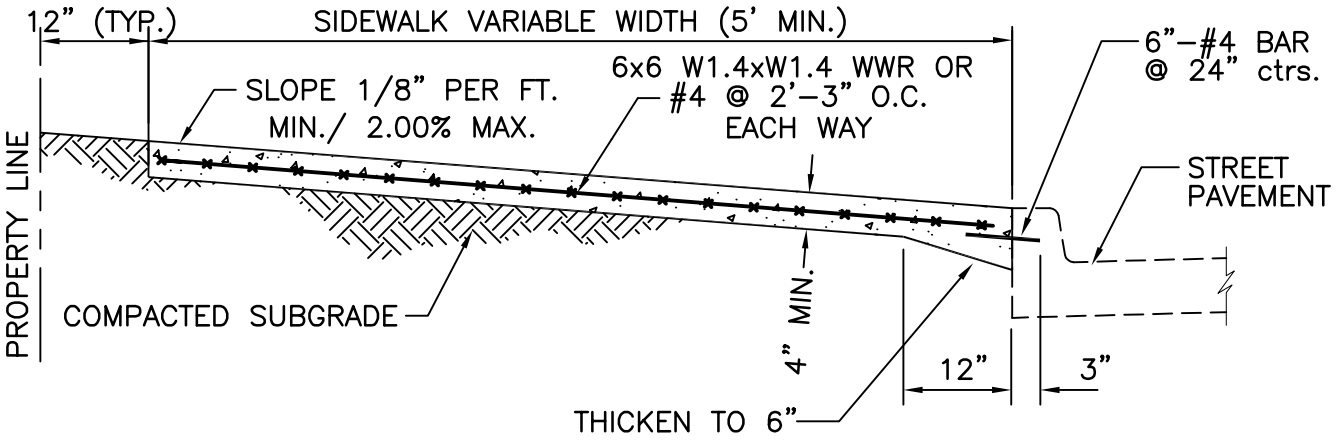

NOTE:

1. SIDEWALK SHALL BE 4" THICK MoDOT PAVEMENT CONCRETE.
2. INSTALL 1/2" TRANSVERSE EXPANSION JOINTS TO MATCH STREET OR CURB AND GUTTER EXPANSION JOINTS AND AT ALL DRIVEWAY APPROACHES, AND SIDEWALK RAMPS.
3. INSTALL TRANSVERSE SAW JOINTS AT SPACING EQUAL TO SIDEWALK WIDTH.
4. FOR DOWNTOWN SIDEWALK DETAIL SEE SECTION 1000.
5. NO STEEL TO BE PLACED THROUGH EXPANSION JOINT
6. SIDEWALK CROSS SLOPE SHALL NOT EXCEED 2.00%.
7. DAMAGED SIDEWALK MUST BE PINNED TO EXISTING SIDEWALK.
8. WWR OR REBAR SHALL BE ACCURATELY PLACED AND FIRMLY HELD IN PLACE DURING CONCRETE PLACEMENT BY APPROVED METHODS, SEE SECTION 238.9.

Approved	6/01/16 Date	City of Columbia Public Works Department	SIDEWALK AT BACK OF CURB	420.02
Revisions				

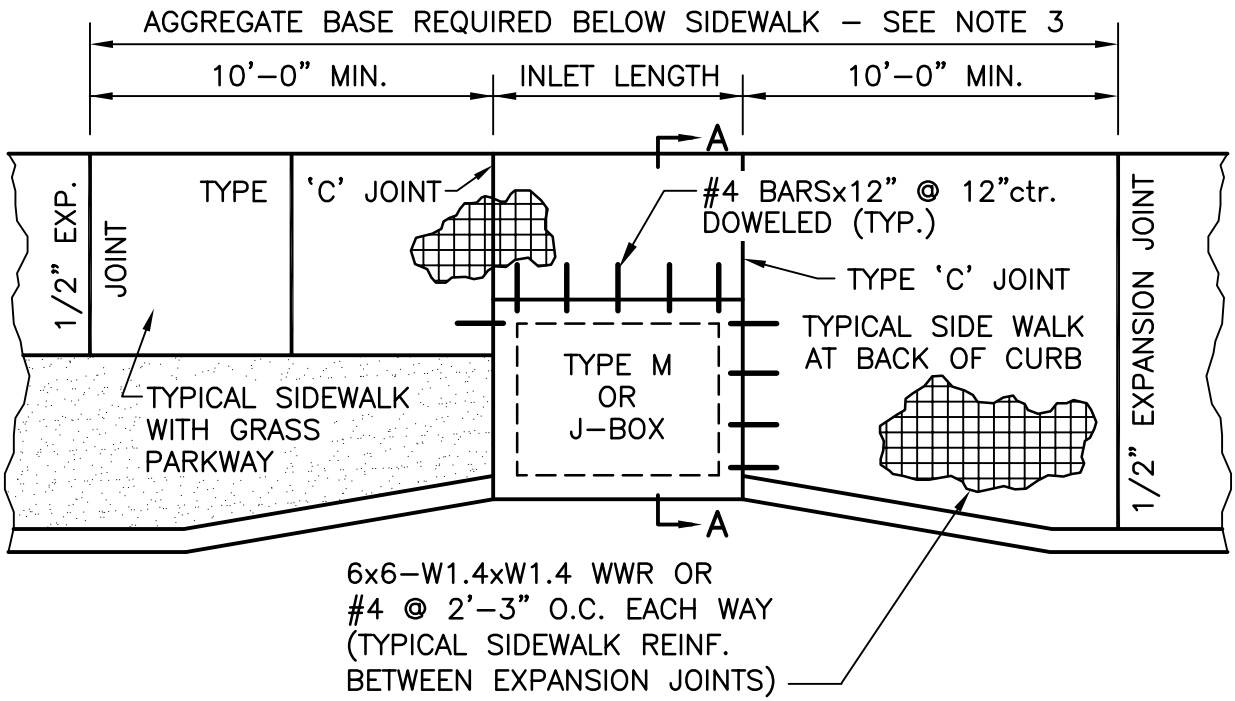

PLAN VIEW

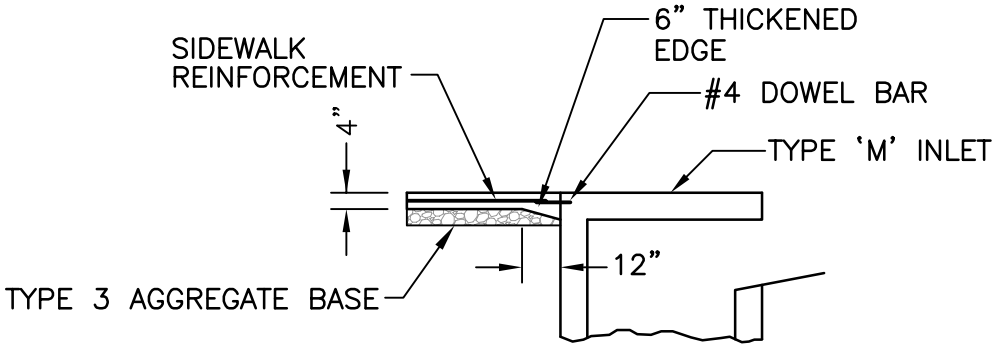

SECTION A–A

NOTES:

1. SIDEWALK SHALL BE 4" THICK MoDOT PAVEMENT CONCRETE
2. REINFORCING STEEL SHALL BE GRADE 60
3. 4" THICK PROPERLY PLACED TYPE 3 AGGREGATE BASE
4. ALL DRILLED DOWEL BARS SHALL BE EXPOXIED.

Approved	6/01/16 Date	City of Columbia Public Works Department	SIDEWALK REINFORCEMENT AT DRAINAGE STRUCTURE	420.03
Revisions				

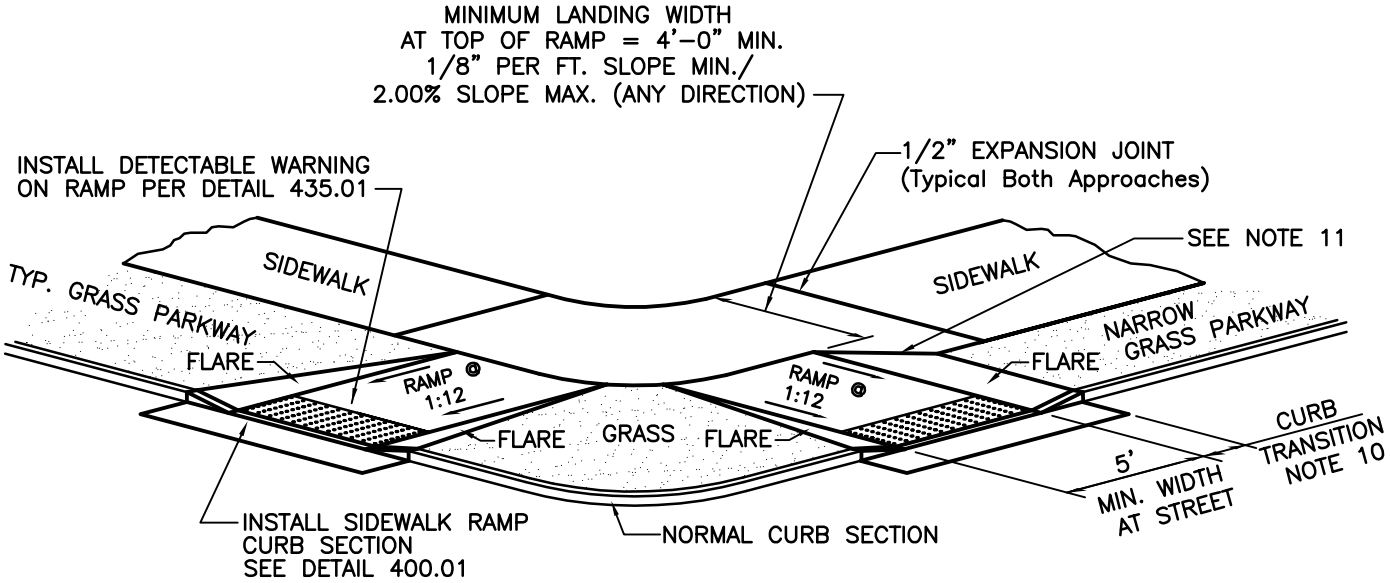

NOTE:

1. RAMP SHALL BE 6" THICK MoDOT PAVEMENT CONCRETE WITH #4 BARS @ 12" O.C. EACH WAY.
2. EXPANSION JOINT SHALL BE 1/2" PREFORMED CORK OR BITUMINOUS EXPANSION JOINT MATERIAL.
3. MAXIMUM RAMP CROSS SLOPE IS 2.00%.
4. ALL SLOPES ARE MEASURED FROM THE HORIZONTAL.
5. REPLACE STANDARD CURB SECTION WITH SIDEWALK RAMP CURB SECTION – DETAIL 400.01
6. RAMP LENGTH IS DEPENDENT ON 1:12 MAX. SLOPE. USE FLATTER WHEN POSSIBLE.
7. LANDING AREA AT TOP OF RAMP SHALL BE 4'-0" MIN WIDTH, CROSS SLOPE OF LANDING SHALL NOT EXCEED 2.00%, INCREASE SIDEWALK RADIUS TO OBTAIN MINIMUM 4'-0" LANDING.
8. TYPE "A" RAMP NOT APPLICABLE IF SIDEWALK AND PARKWAY WIDTH DOES NOT PROVIDE 4'-0" LANDING AT TOP OF RAMP.
9. FLARES ARE REQUIRED AT RAMPS TO KEEP GRASS PARKWAY SLOPES IN CONFORMANCE WITH THE TYPICAL CROSS SECTION.
10. CURB TRANSITION LENGTH IS DEPENDENT ON FLARE SLOPE
11. IF RAMP EXTENDS INTO NORMAL SIDEWALK, FLARE SLOPE MUST NOT EXCEED 1:10. A LANDING IS REQUIRED, SEE NOTE 7.

Approved 6/01/16 Date	City of Columbia Public Works Department	SIDEWALK RAMP Sidewalk with Grass Parkway (Type A)	430.01
Revisions			

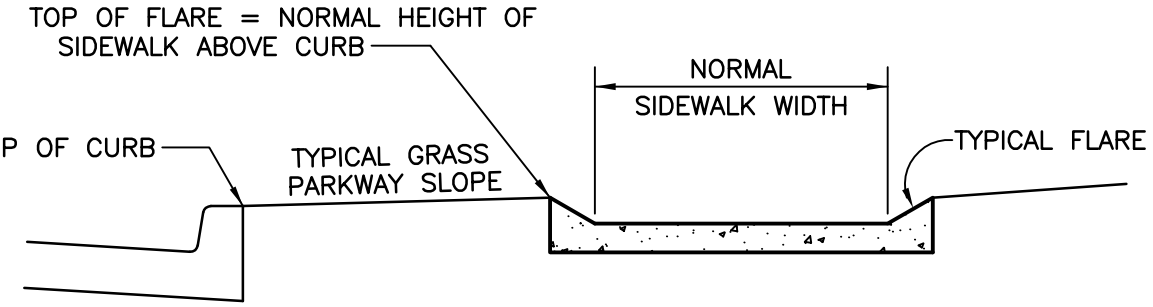

SECTION A–A

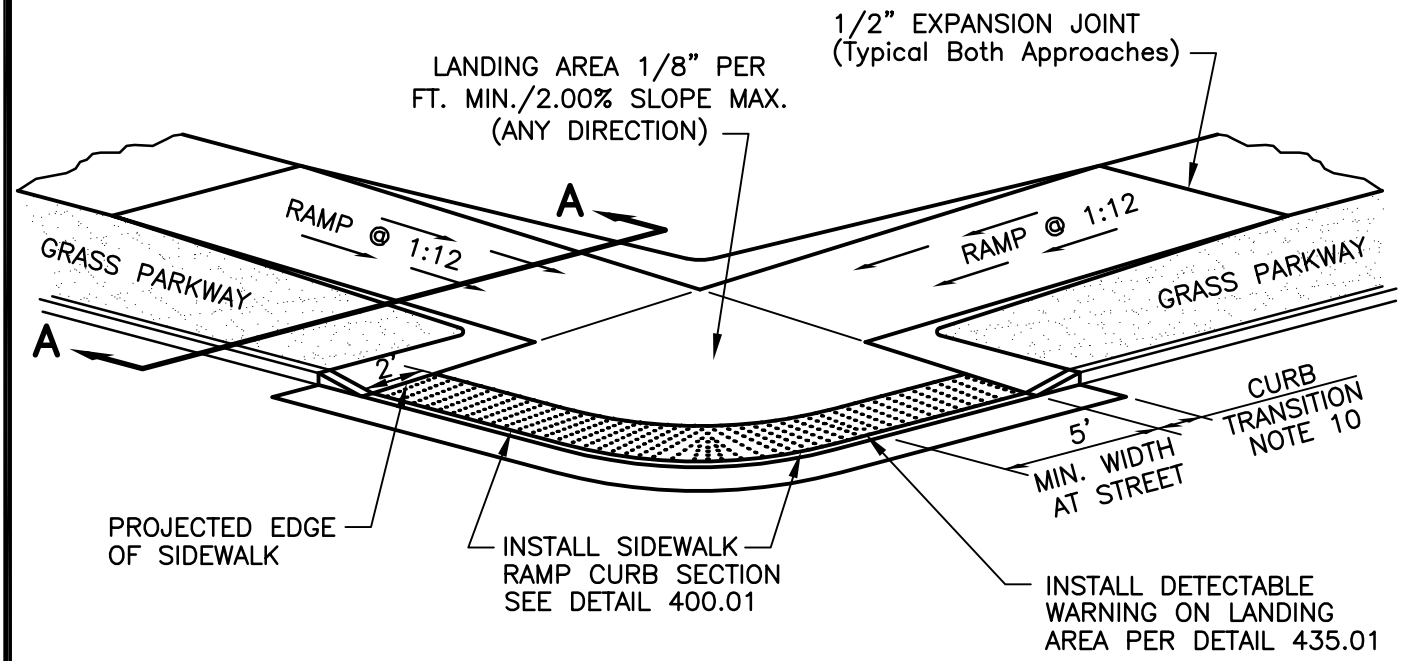

NOTES:

1. RAMP AND LANDING SHALL BE 6" THICK MoDOT PAVEMENT CONCRETE WITH #4 BARS AT 12" O.C. E.W.
2. EXPANSION JOINT SHALL BE 1/2" PREFORMED CORK OR BITUMINOUS EXPANSION JOINT MATERIAL.
3. MAXIMUM RAMP CROSS SLOPE IS 2.00%.
4. ALL SLOPES ARE MEASURED FROM THE HORIZONTAL.
5. REPLACE STANDARD CURB SECTION WITH SIDEWALK RAMP CURB SECTION – DETAIL 400.01
6. RAMP LENGTH IS DEPENDENT ON 1:12 MAX. SLOPE. USE FLATTER WHEN POSSIBLE.
7. LANDING AREA SHALL BE 4'–0" MIN WIDTH.
8. USE TYPE "B" RAMP ONLY IF TYPE "A" IS NOT FEASIBLE.
9. FLARES ARE REQUIRED AT RAMPS TO KEEP GRASS PARKWAY SLOPES IN CONFORMANCE WITH THE TYPICAL CROSS SECTION. (SEE SECTION A–A)
10. CURB TRANSITION LENGTH IS DEPENDENT ON FLARE SLOPE.

Approved 6/01/16 Date	City of Columbia Public Works Department	SIDEWALK RAMP Sidewalk with Grass Parkway (Type B)	430.02
Revisions			

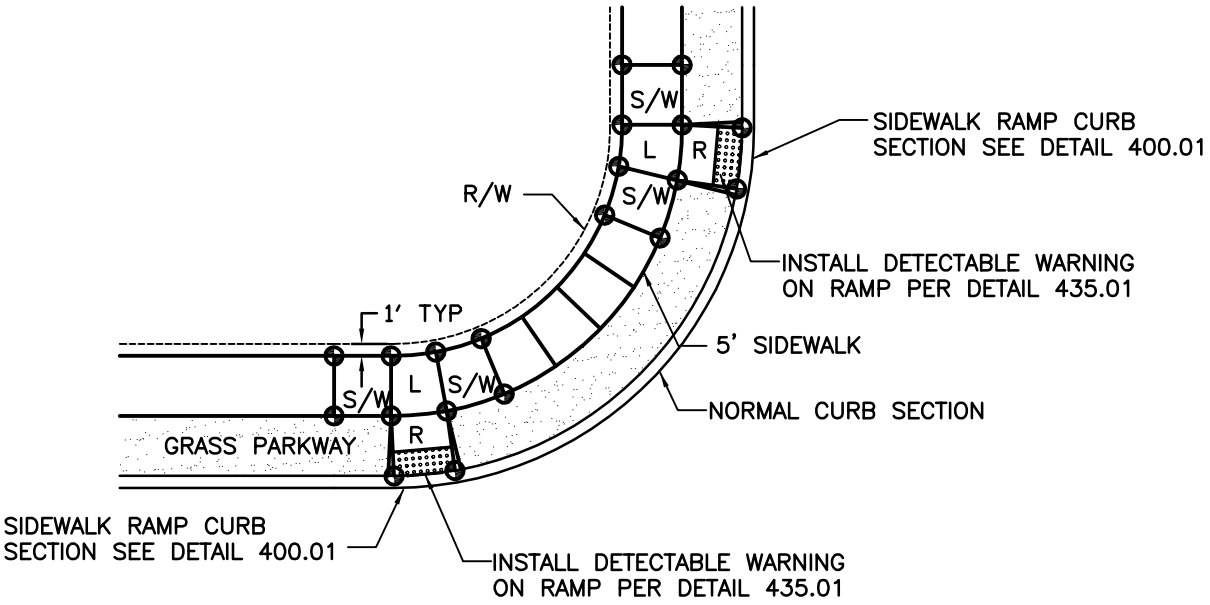

1. ⊕ DENOTES SPOT ELEVATION REQUIRED

TYPE "A" SIDEWALK WITH GRASS PARKWAY

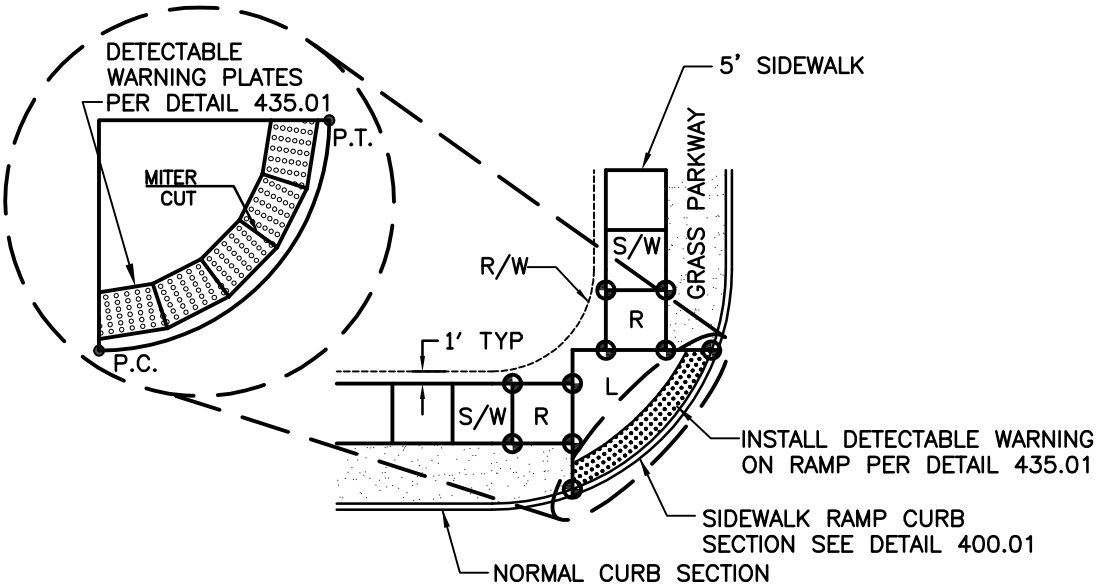

1. ⊕ DENOTES SPOT ELEVATION REQUIRED
2. DETECTABLE WARNING PLATES ARE TO BE MITERED EQUALLY ON BOTH SIDES TO BE FLUSH.

TYPE "B" SIDEWALK WITH GRASS PARKWAY

R = RAMP AT 1:12 RUNNING SLOPE MAX

L = LANDING AT 1/8" PER FT. SLOPE MIN./2.00% SLOPE MAX. (ANY DIRECTION)

S/W = SIDEWALK AT 1/8" PER FT. CROSS SLOPE MIN./2.00% CROSS SLOPE MAX.

Approved	6/01/16 Date	City of Columbia Public Works Department	SIDEWALK RAMP PLAN VIEW Sidewalk with Grass Parkway (Type A &B)	430.03
Revisions				

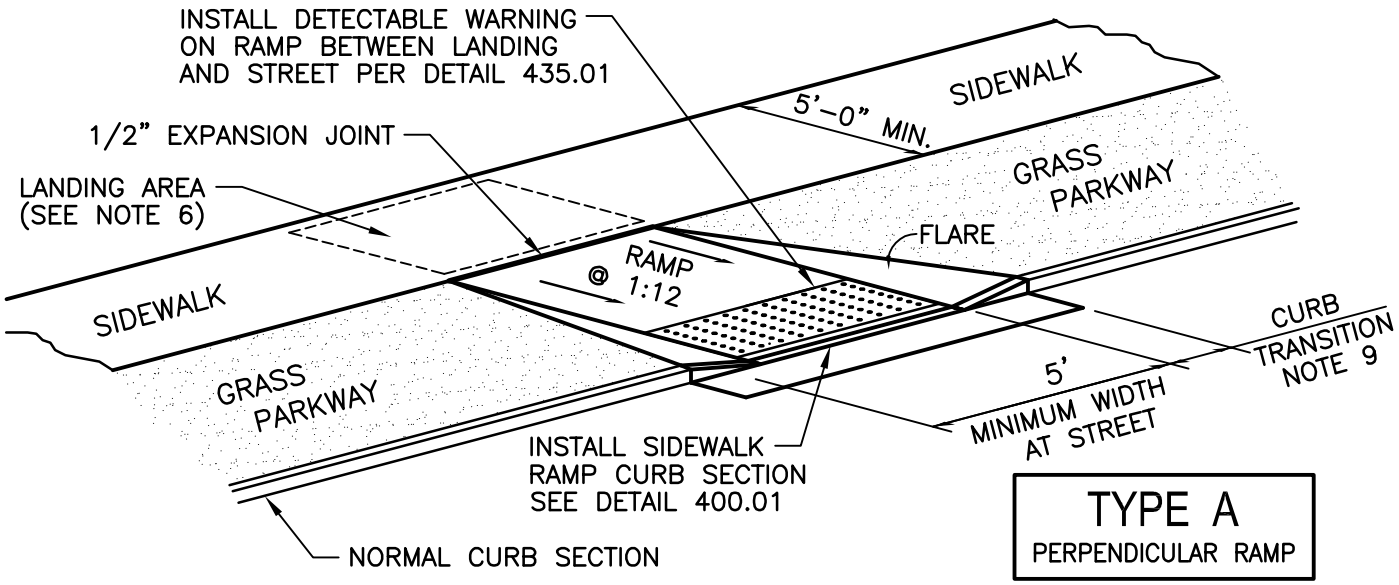

TYPE A
PERPENDICULAR RAMP

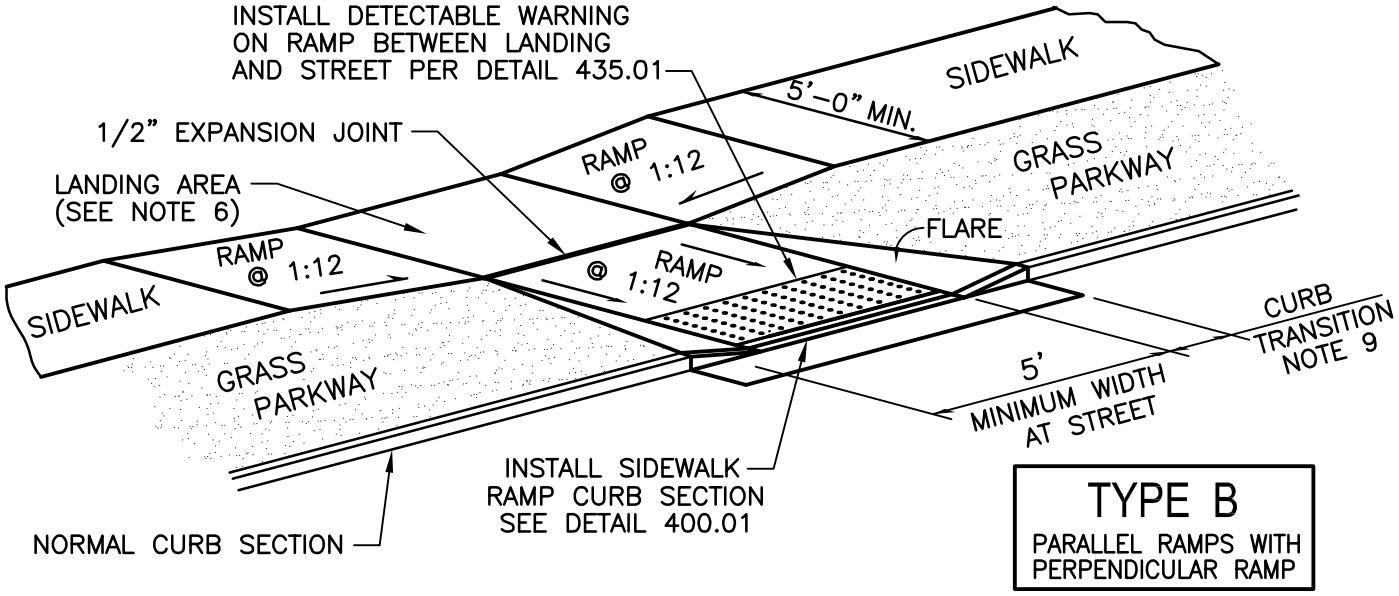

TYPE B
PARALLEL RAMPS WITH PERPENDICULAR RAMP

NOTE:

1. RAMP SHALL BE 6" THICK MoDOT PAVEMENT CONCRETE WITH #4 BARS AT 12" O.C. EACH WAY
2. EXPANSION JOINT SHALL BE 1/2" PREFORMED CORK OR BITUMINOUS EXPANSION JOINT MATERIAL.
3. ALL SLOPES ARE MEASURED FROM THE HORIZONTAL.
4. REPLACE STANDARD CURB SECTION WITH SIDEWALK RAMP CURB SECTION – DETAIL 400.01
5. RAMP LENGTH IS DEPENDENT ON 1:12 MAX. SLOPE. USE FLATTER WHEN POSSIBLE.
6. LANDING AREA AT TOP OF RAMP SHALL BE 4'-0" MIN. WIDTH. SLOPE OF LANDING SHALL BE 1/8" PER FT. MIN./2.00% MAX (ANY DIRECTION)
7. TYPE "A" RAMP NOT APPLICABLE IF PARKWAY WIDTH DOES NOT PROVIDE ENOUGH LENGTH FOR PERPENDICULAR RAMP AT 1:12 SLOPE.
8. FLARES ARE REQUIRED AT RAMPS TO KEEP GRASS PARKWAY SLOPES IN CONFORMANCE WITH THE TYPICAL CROSS SECTION.
9. CURB TRANSITION LENGTH IS DEPENDENT ON FLARE SLOPE.

Approved	6/01/16 Date	City of Columbia Public Works Department	MIDBLOCK SIDEWALK RAMP Sidewalk with Grass Parkway	431.01
Revisions				

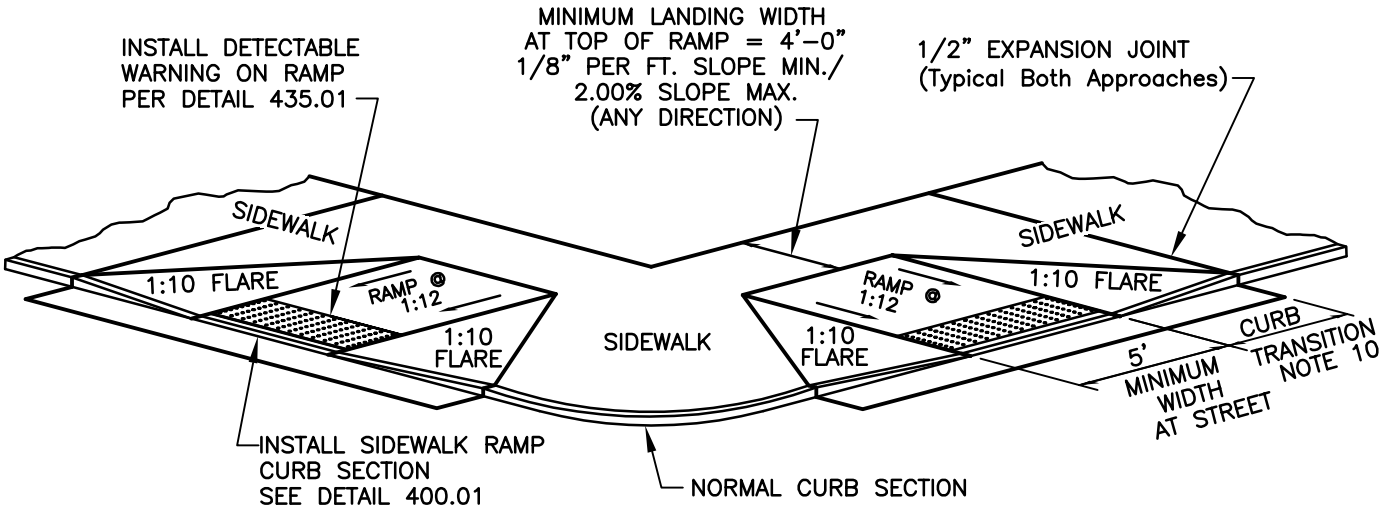

NOTE:

1. RAMP SHALL BE 6" THICK MoDOT PAVEMENT CONCRETE WITH #4 BARS AT 12" O.C. E.W.
2. EXPANSION JOINT SHALL BE 1/2" PREFORMED CORK OR BITUMINOUS EXPANSION JOINT MATERIAL.
3. MAXIMUM RAMP CROSS SLOPE IS 2.00%.
4. ALL SLOPES ARE MEASURED FROM THE HORIZONTAL.
5. REPLACE STANDARD CURB SECTION WITH SIDEWALK RAMP CURB SECTION – DETAIL 400.01
6. RAMP LENGTH IS DEPENDENT ON 1:12 MAX. SLOPE. USE FLATTER WHEN POSSIBLE.
7. LANDING AREA AT TOP OF RAMP SHALL BE 4'-0" MIN WIDTH, CROSS SLOPE OF LANDING SHALL NOT EXCEED 2.00%.
8. TYPE "A" RAMP NOT APPLICABLE IF SIDEWALK WIDTH DOES NOT PROVIDE 4'-0" LANDING AT THE TOP OF RAMP. USE TYPE "B" RAMP.
9. RAMP EXTENDS INTO SIDEWALK, FLARE SLOPE MUST NOT EXCEED 1:10.
10. CURB TRANSITION LENGTH IS DEPENDENT ON 1:10 FLARE SLOPE

Approved	6/01/16 Date	City of Columbia Public Works Department	SIDEWALK RAMP Sidewalk at Back of Curb (Type A)	432.01
Revisions				

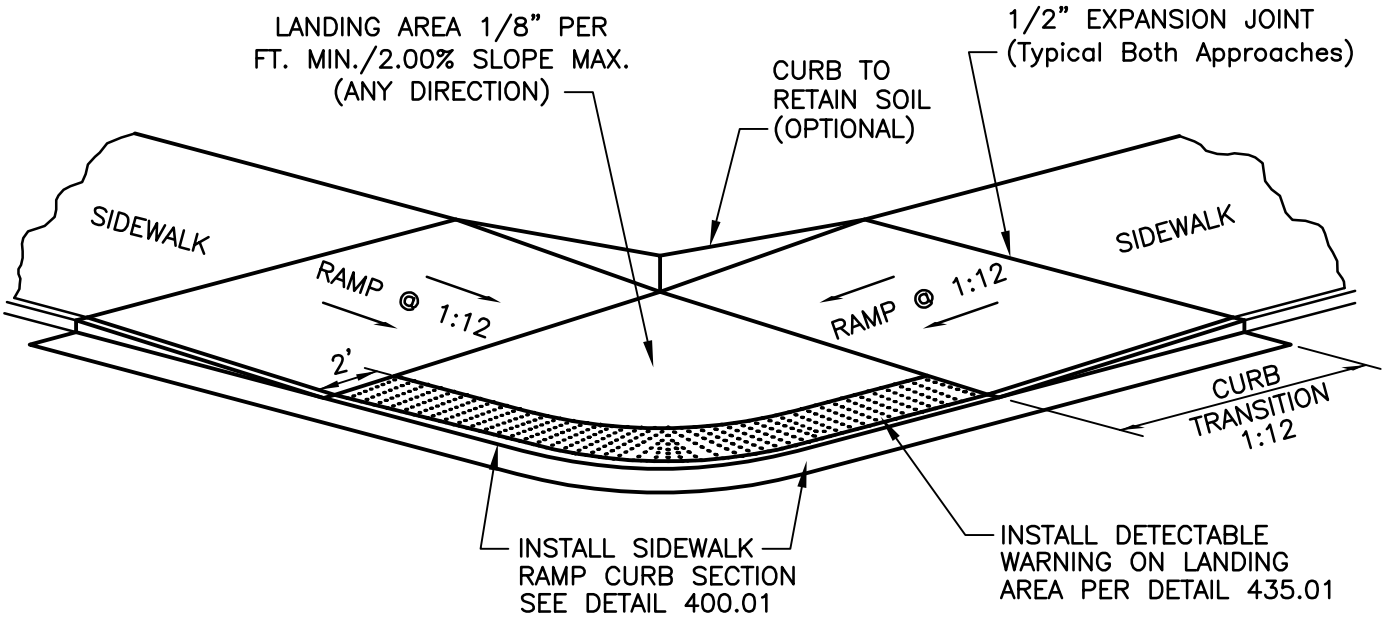

NOTES:

1. RAMP AND LANDING SHALL BE 6" THICK REINFORCED MoDOT PAVEMENT CONCRETE W/#4 BARS @ 12" O.C.
2. EXPANSION JOINT SHALL BE 1/2" PREFORMED CORK OR BITUMINOUS EXPANSION JOINT MATERIAL.
3. MAXIMUM RAMP CROSS SLOPE IS 2.00%.
4. ALL SLOPES ARE MEASURED FROM THE HORIZONTAL.
5. REPLACE STANDARD CURB SECTION WITH SIDEWALK RAMP CURB SECTION – DETAIL 400.01
6. RAMP LENGTH IS DEPENDENT ON 1:12 MAX. SLOPE. USE FLATTER WHEN POSSIBLE.
7. LANDING AREA SHALL BE 4'–0" MIN WIDTH.
8. USE TYPE "B" RAMP ONLY IF TYPE "A" IS NOT FEASIBLE.

Approved	6/01/16 Date	City of Columbia Public Works Department	SIDEWALK RAMP Sidewalk at Back of Curb (Type B)	432.02
Revisions				

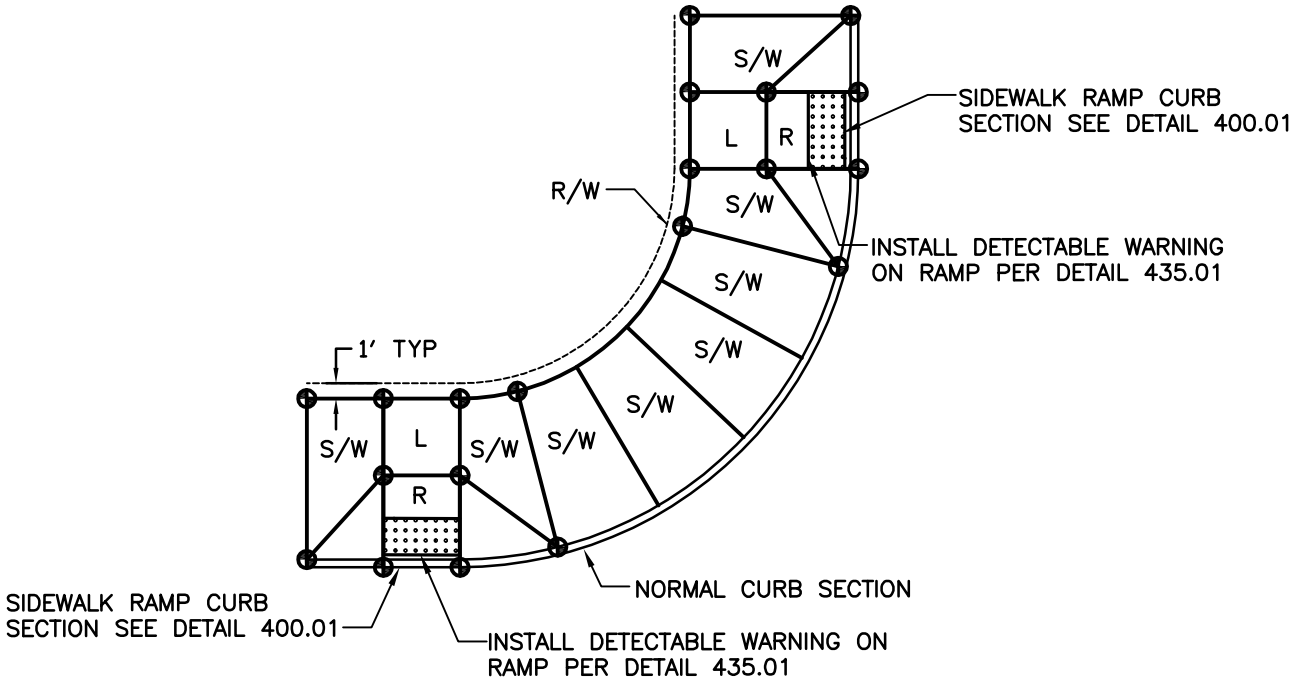

1. ⊕ DENOTES SPOT ELEVATION REQUIRED

TYPE "A" SIDEWALK AT BACK OF CURB

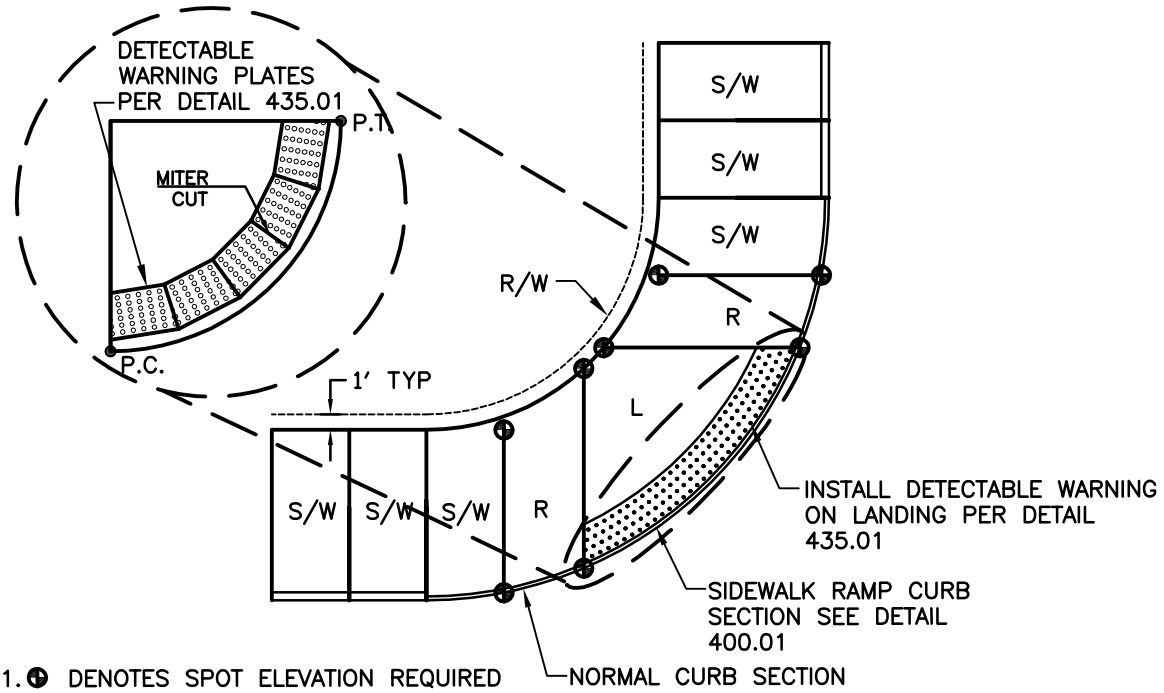

1. ⊕ DENOTES SPOT ELEVATION REQUIRED
2. DETECTABLE WARNING PLATES ARE TO BE MITERED EQUALLY ON BOTH SIDES TO BE FLUSH.

TYPE "B" SIDEWALK AT BACK OF CURB

R = RAMP AT 1:12 RUNNING SLOPE MAX

L = LANDING AT 1/8" PER FT. SLOPE MIN./2.00% SLOPE MAX. (ANY DIRECTION)

S/W = SIDEWALK AT 1/8" PER FT. CROSS SLOPE MIN./2.00% CROSS SLOPE MAX.

Approved	6/01/16 Date	City of Columbia Public Works Department	SIDEWALK RAMP PLAN VIEW Sidewalk at Back of Curb (Type A & B)	432.03
Revisions				

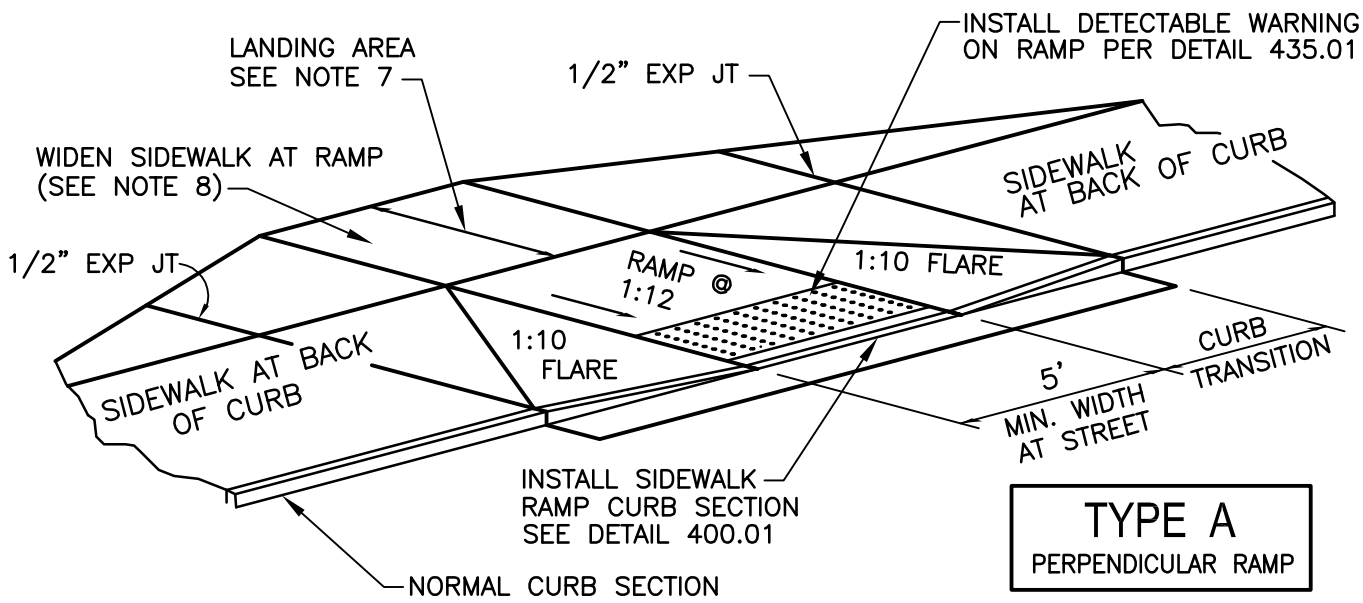

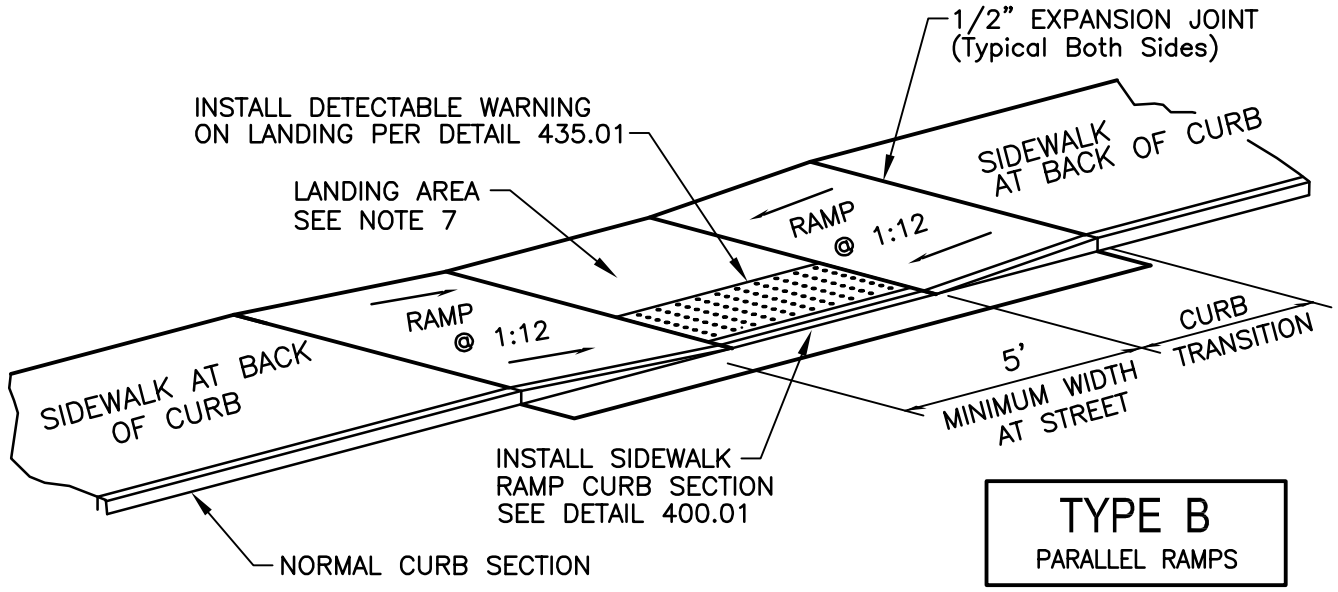

NOTE:

1. RAMP SHALL BE 4" THICK REINFORCED MoDOT PAVEMENT CONCRETE SAME AS SIDEWALK.
2. EXPANSION JOINT SHALL BE 1/2" PREFORMED CORK OR BITUMINOUS EXPANSION JOINT MATERIAL.
3. MAXIMUM RAMP CROSS SLOPE IS 2.00%.
4. ALL SLOPES ARE MEASURED FROM THE HORIZONTAL.
5. REPLACE STANDARD CURB SECTION WITH SIDEWALK RAMP CURB SECTION – DETAIL 400.01
6. RAMP LENGTH IS DEPENDENT ON 1:12 MAX. SLOPE. USE FLATTER WHEN POSSIBLE.
7. LANDING AREA SHALL BE 4'–0" MIN. WIDTH. SLOPE OF LANDING SHALL BE 1/8" PER FT. MIN./2.00% MAX. (ANY DIRECTION)
8. TYPE "A" RAMP NOT APPLICABLE WHEN NORMAL SIDEWALK WIDTH DOES NOT PROVIDE 4'–0" LANDING AT THE TOP OF RAMP, WIDEN SIDEWALK OR USE TYPE "B" RAMP.
9. 1:10 FLARES ARE REQUIRED ON TYPE "A" RAMPS.

Approved	6/01/16 Date	City of Columbia Public Works Department	MIDBLOCK SIDEWALK RAMP Sidewalk at Back of Curb	433.01
Revisions				

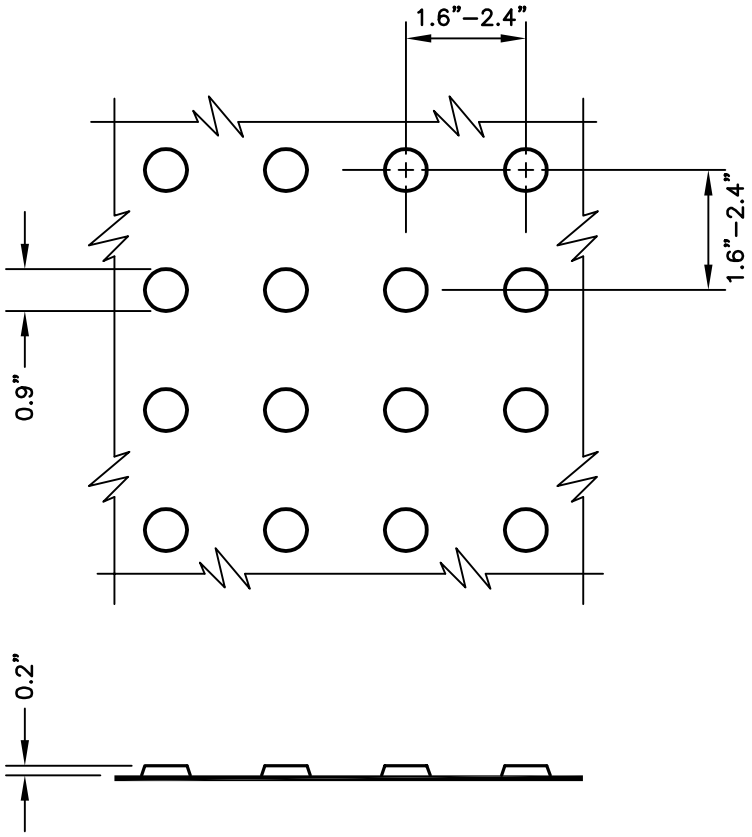

NOTE:

1. DETECTABLE WARNING SHALL CONSIST OF RAISED TRUNCATED DOMES WITH A DIAMETER OF 0.9", A HEIGHT OF NOMINAL 0.2", AND A CENTER–TO–CENTER SPACING OF NOMINAL 2.35", AND SHALL CONTRAST VISUALLY WITH ADJOINING SURFACES, ACHIEVED BY THE INSTALLATION OF ADA SOLUTIONS 2436 REPBR, 2448 REPBR, OR 2460 REPBR (OR APPROVED EQUAL) AND SHALL BE AN INTEGRAL PART OF THE WALKING SURFACE.

2. ADA SOLUTIONS 24RADREPBR OR APPROVED EQUAL TO BE USED WITH DETAIL 430.02, 432.02, AND 1000.08.

3. STAMPED CONCRETE IS NOT AN APPROVED EQUAL.

4. DOWNTOWN DETECTABLE WARNINGS MAY BE ADA 2004 COMPLIANT DETECTABLE WARNING PAVERS.

5. DETECTABLE WARNING PLATES ARE TO BE COLONIAL OR BRICK RED IN COLOR OR APPROVED EQUAL.

6. DETECTABLE WARNING SURFACES SHALL BE 24" WIDE AND EXTEND THE FULL LENGTH OF THE PUBLIC USE AREA.

Approved	6/01/16 Date	City of Columbia Public Works Department	DETECTABLE WARNING	435.01
Revisions				

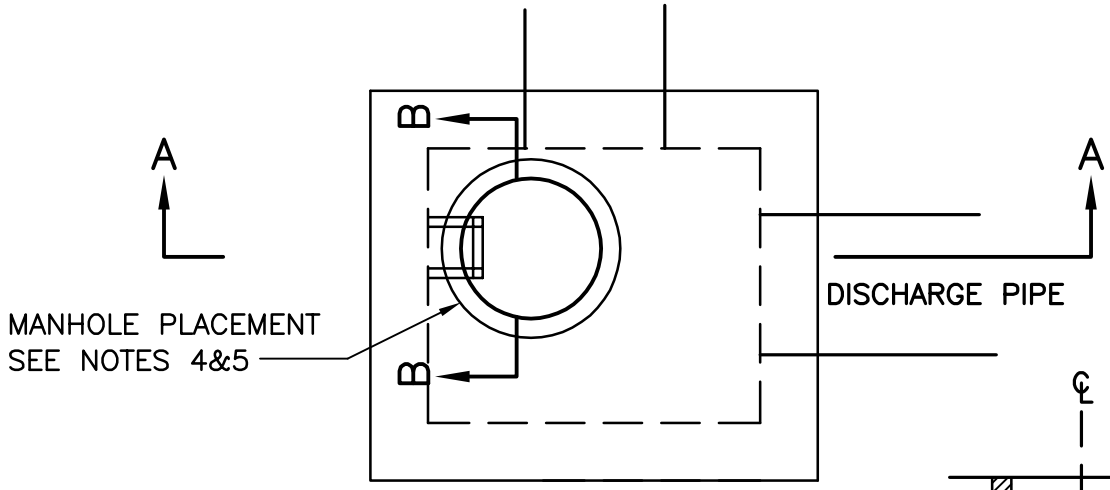

PLAN VIEW

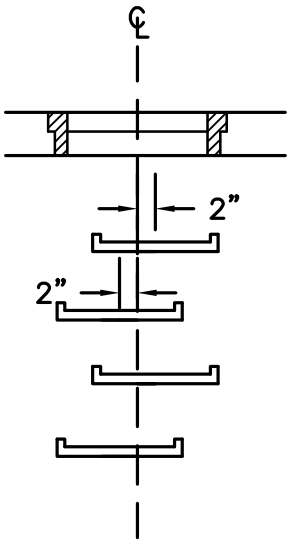

SECTION B–B

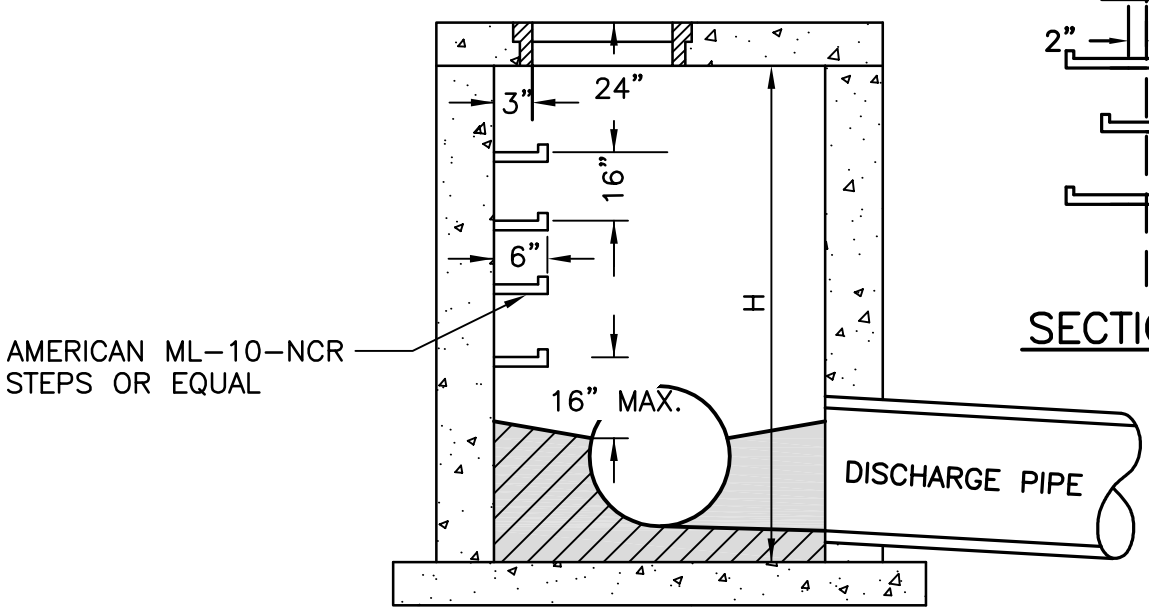

SECTION A–A

NOTES:

1. STEPS NOT REQUIRED WHERE H IS LESS THAN 4'.
2. STEPS SHALL BE ML–10–NCR OR EQUAL
3. STEPS SHALL BE PLACED ON VACANT WALL WHEN POSSIBLE
4. MANHOLE RING SHALL BE OFFSET TOWARD WALL WITH STEPS.
5. MANHOLE RING SHALL BE CENTERED ON CENTERLINE OF STEPS
6. STAGGER STEPS 2" EACH WAY FROM CENTERLINE OF MANHOLE RING.
7. TOP STEP 24" BELOW TOP OF SLAB
8. STEP SPACING TO BE 16", BOTTOM STEP TO BE NO HIGHER THAN 16" FROM INVERT.

Approved	6/01/16 Date	City of Columbia Public Works Department	DRAINAGE STRUCTURE STEPS	500.01
Revisions				

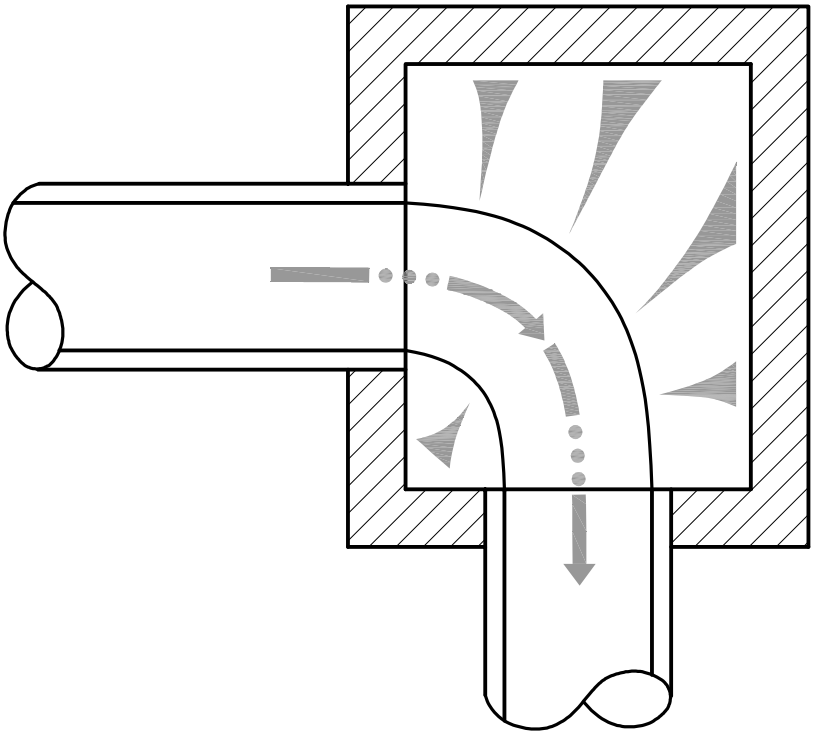

PLAN

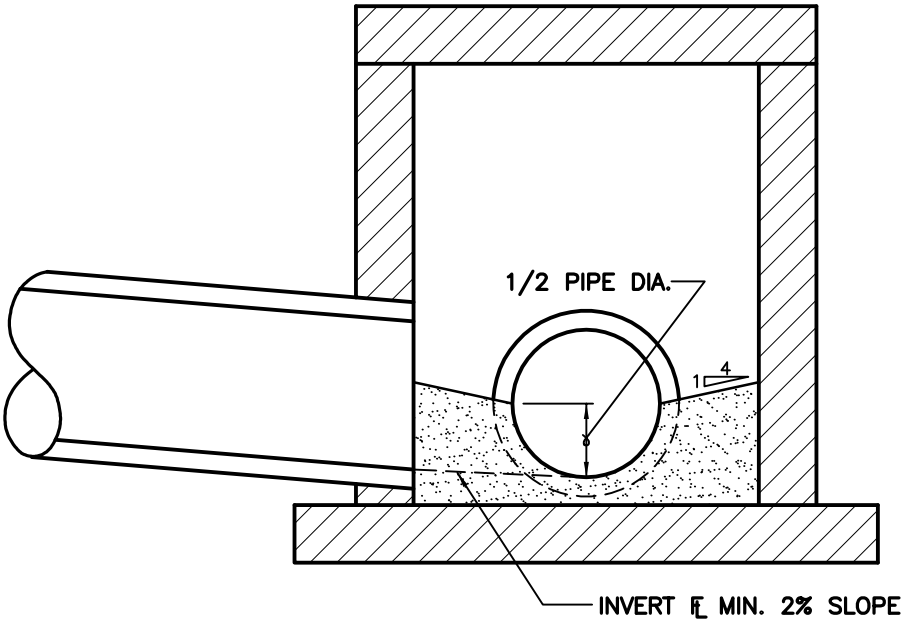

SECTION

NOTES:

1. FORM ALL INVERTS FOR SMOOTH FLOW THRU STRUCTURE.
2. INVERT SHALL BE FORMED UP TO 1/2 THE PIPE DIAMETER.
3. INVERT SHALL BE CLASS E CONCRETE.

Approved	6/01/16 Date	City of Columbia Public Works Department	DRAINAGE STRUCTURE INVERT	500.02
Revisions				

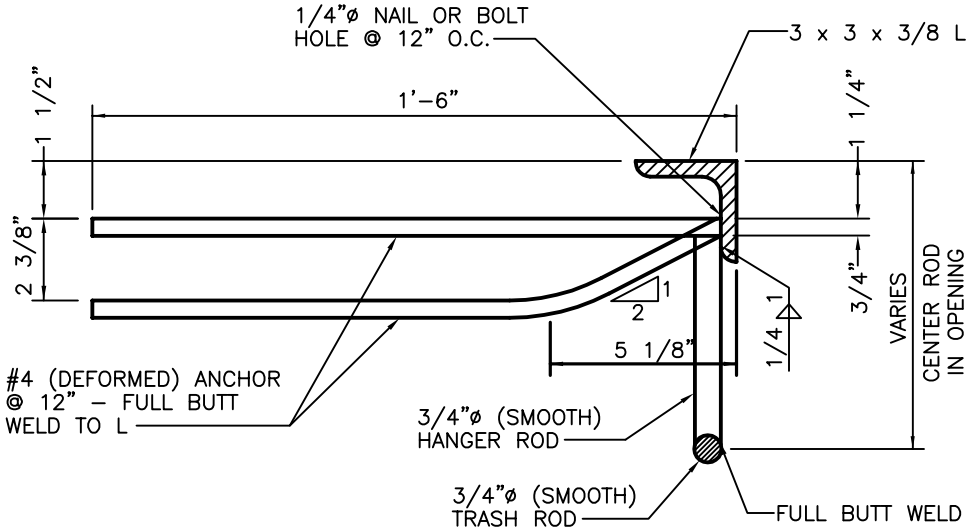

SECTION

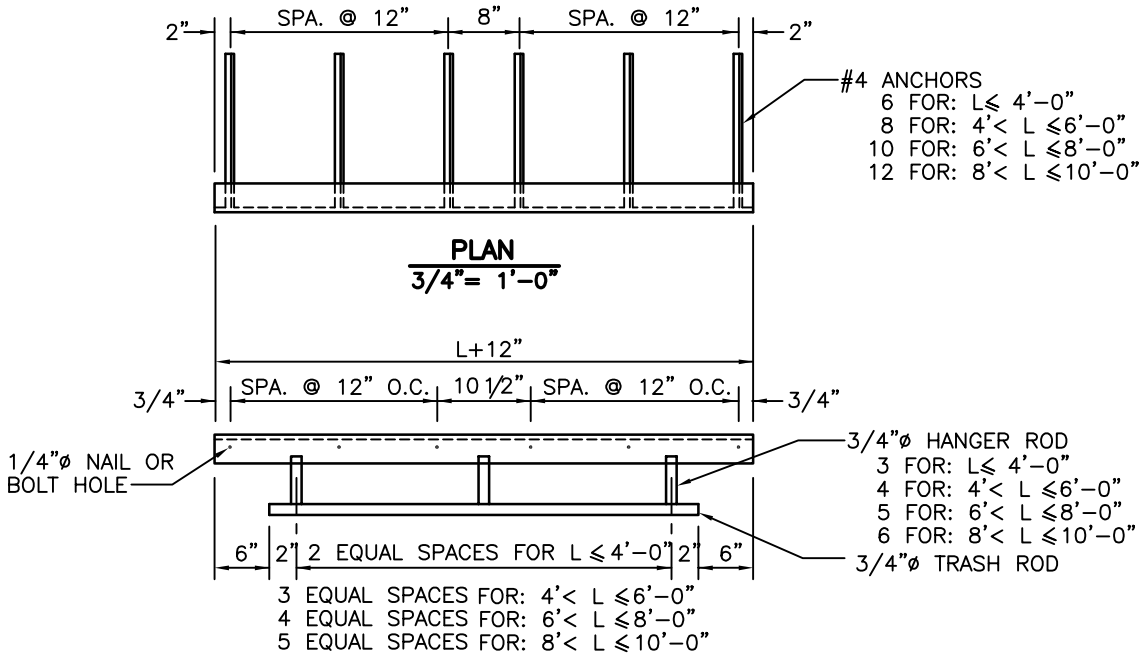

FRONT ELEV.

NOTES:

1. STRUCTURAL STEEL SHALL BE GRADE A-36
2. EXPOSED STEEL SURFACES TO BE FINISHED SMOOTH.
3. HOT DIP GALVANIZE ASSEMBLY. CHIPPING NOT REQUIRED ON ANCHOR WELDS.
4. NAILS OR BOLTS USED TO ANCHOR ANGLE ASSEMBLY TO FORM SHALL BE REMOVED OR CUT OFF FLUSH WITH SURFACE OF ANGLE. DO NOT MAR GALVANIZING.
5. DIMENSION "L" REPRESENTS THE INSIDE INLET DIMENSION.

Approved	6/01/16 Date	City of Columbia Public Works Department	INLET OPENING TRASH RACK	500.03
Revisions				

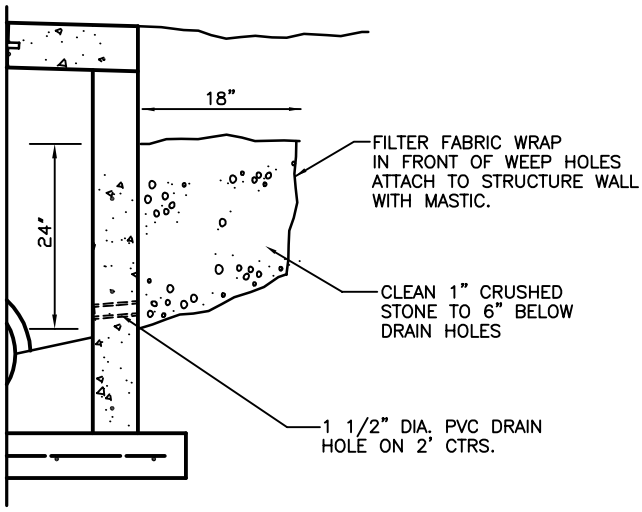

PARTIAL SECTION

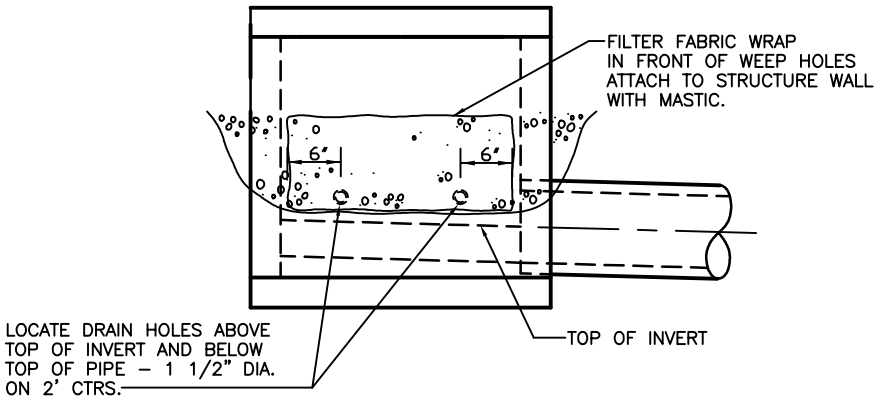

FRONT ELEVATION

NOTE:

1. PLACE WEEP HOLES ON UPSTREAM FACE OF ALL STRUCTURES AND ALSO ON ROADWAY FACE OF CURB INLET STRUCTURES.
2. WEEP HOLE FILTER FABRIC SHALL CONSIST OF A NON–WOVEN, POLYPROPYLENE TYPE FABRIC SUCH AS: AMOCO 4553 NON–WOVEN GEOTEXTILE FABRIC OR APPROVED EQUAL.

Approved	6/01/16 Date	City of Columbia Public Works Department	DRAINAGE STRUCTURE WEEP HOLES	500.04
Revisions				

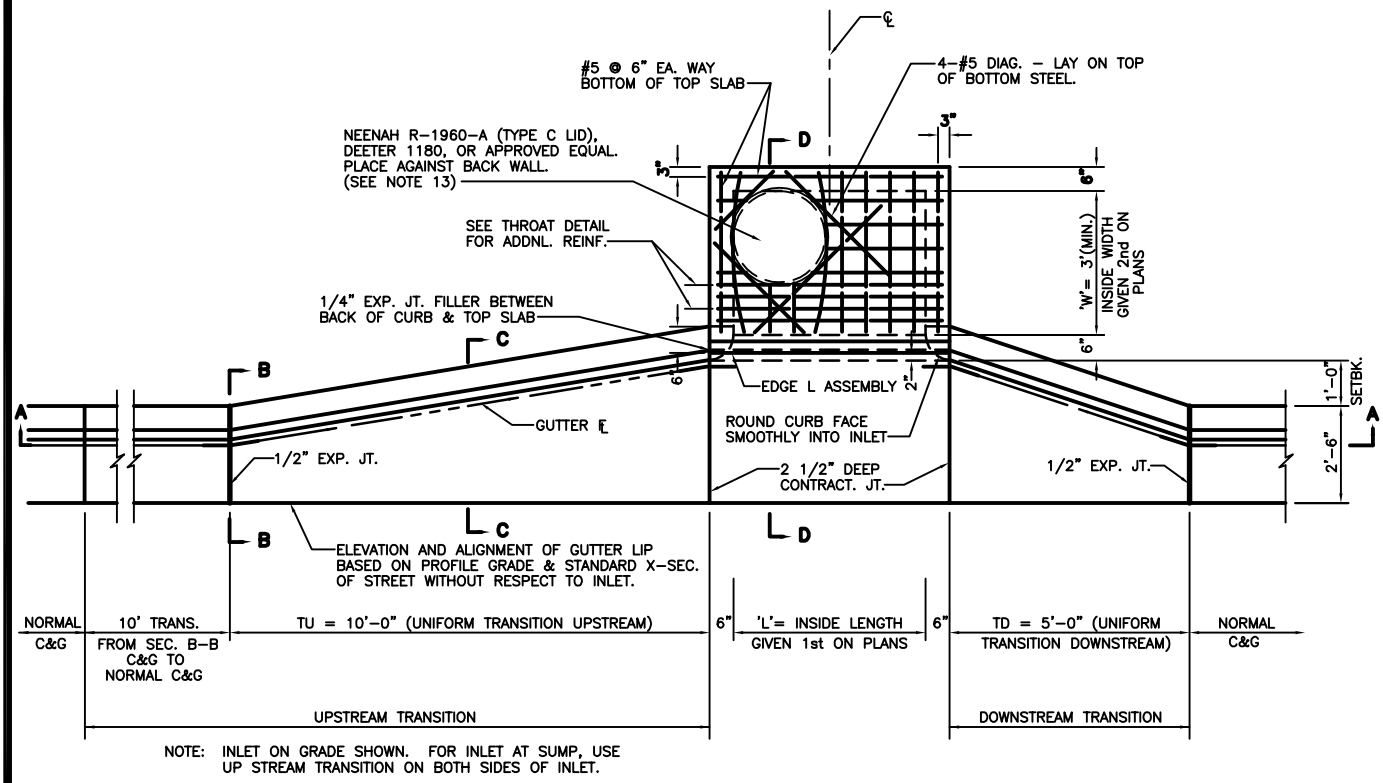

NOTE: INLET ON GRADE SHOWN. FOR INLET AT SUMP, USE UP STREAM TRANSITION ON BOTH SIDES OF INLET.

PLAN

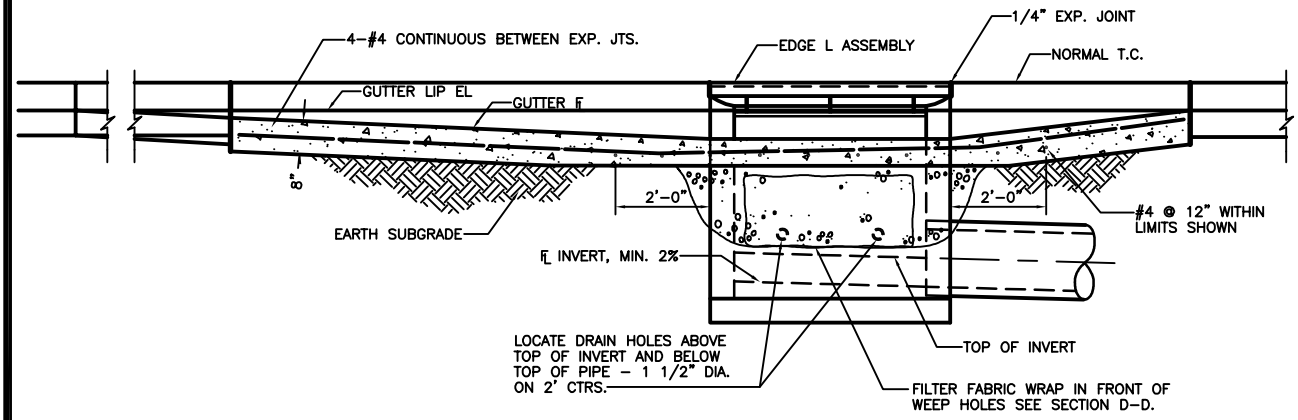

SECTION A-A

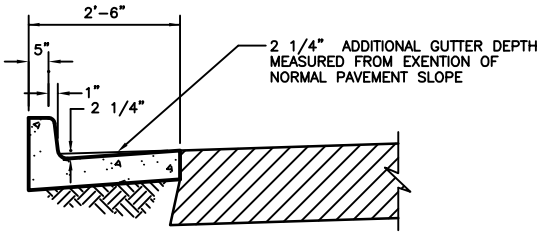

SECTION B-B

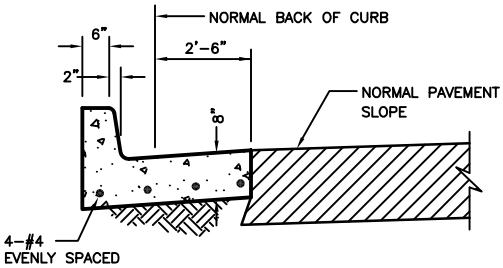

SECTION C-C

Approved	6/01/16 Date	City of Columbia Public Works Department	TYPE M INLET (Plan & Sections)	505.01A
Revisions				

TYPE M INLET NOTES

1. CONCRETE SHALL BE: CLASS E FOR BASE, CLASS D FOR WALLS AND TOP.
2. REINFORCING STEEL SHALL BE GRADE 60
3. THIS DESIGN IS FOR L = 4'–0", 6'–0", 8'–0", OR 10'–0".
4. INLET WILL BE CALLED OUT ON PLANS AS 'L'x'W' STD. CURB INLET, OR 'L'x'W' DEFLECTOR CURB INLET. DIMENSIONS 'L'&'W' GIVEN ON PLANS AS 'L'x'W'.
5. STA AND OFFSET OR COORDINATES SHOWN ON PLAN ARE GIVEN TO CENTER OF INLET WALLS.
6. THE ELEVATION OF THE TOP OF INLET GIVEN ON THE PLAN SHEET IS AT THE CENTER OF THE FRONT EDGE OF THE EDGE ANGLE ASSEMBLY. SLOPE THE TOP TO MATCH STREET GRADE, AND CROSS SLOPE OF RIGHT OF WAY.
7. DIMENSIONS TU AND TD AS SHOWN EXCEPT WHERE NOTED OTHERWISE IN PLANS.
8. TRANSITIONS ALONG LENGTH TU & TD MUST BE UNIFORM BETWEEN STANDARD CURB & GUTTER CROSS SECTION & THAT SHOWN AT INLET. FORM CURB FACE WITH FLEXIBLE FORM.
9. REINFORCEMENT:
   (A) BEND AROUND MH RING WHEREVER FEASIBLE. (SEE PLAN)
   (B) MINIMUM 2" COVER REQUIRED UNLESS NOTED OTHERWISE.
10. BROOM FINISH TOP SLAB.
11. HORIZONTAL PROJECTION OF PIPE CENTERLINE SHALL INTERSECT AT THE CENTER OF INLET, UNLESS OTHERWISE SHOWN.
12. TRIM PIPE FLUSH WITH INSIDE WALLS.
13. STEPS, FRAME, AND LID:
    STEPS NOT REQUIRED WHERE H IS LESS THAN 4'.
    STEPS SHALL BE ML–10–NCR OR EQUAL
    STEPS SHALL BE PLACED ON VACANT WALL WHEN POSSIBLE
    MANHOLE RING SHALL BE OFFSET TOWARD WALL WITH STEPS.
    MANHOLE RING SHALL BE CENTERED ON CENTERLINE OF STEPS
    STAGGER STEPS 2" EACH WAY FROM CENTERLINE OF MANHOLE RING.
    TOP STEP 24" BELOW TOP OF SLAB
    STEP SPACING TO BE 16", BOTTOM STEP TO BE NO HIGHER THAN 16" FROM INVERT.
14. CLASS E CONCRETE INVERT SHALL BE FORMED UP TO 1/2 THE PIPE DIAMETER.
15. WEEP HOLE FILTER FABRIC SHALL CONSIST OF A NON–WOVEN, POLYPROPYLENE TYPE FABRIC SUCH AS PROPEX GEOTEX 801 NON–WOVEN GEOTEXTILE FABRIC OR APPROVED EQUAL.
16. DRIVEWAYS ARE TO BE AT LEAST 5' FROM END OF CURB TRANSITION (TU AND TD).

Approved	6/01/16 Date	City of Columbia Public Works Department	TYPE M INLET NOTES	505.01B
Revisions				

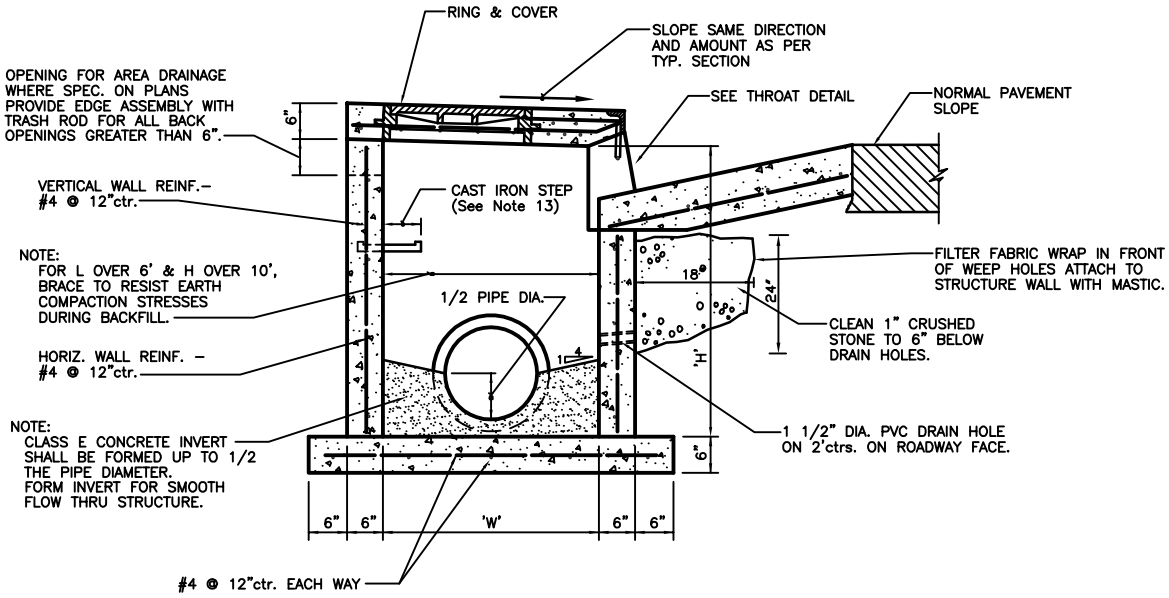

SECTION D–D

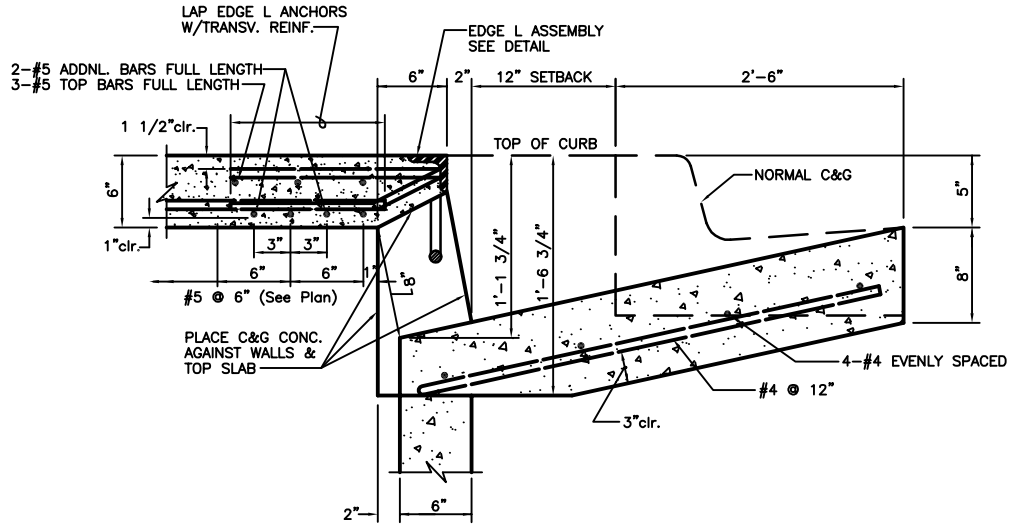

THROAT DETAIL

Approved	6/01/16 Date	City of Columbia Public Works Department	TYPE M INLET SECTION AND DETAIL	505.01C
Revisions				

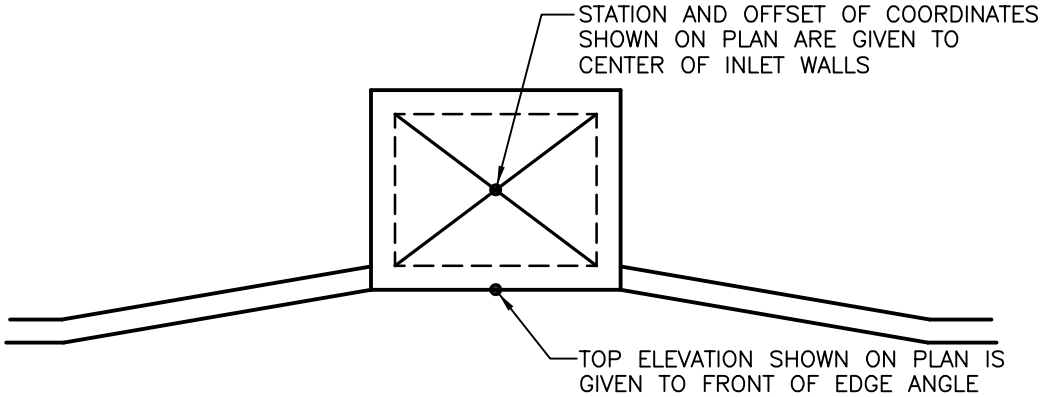

INLET PLAN INFORMATION

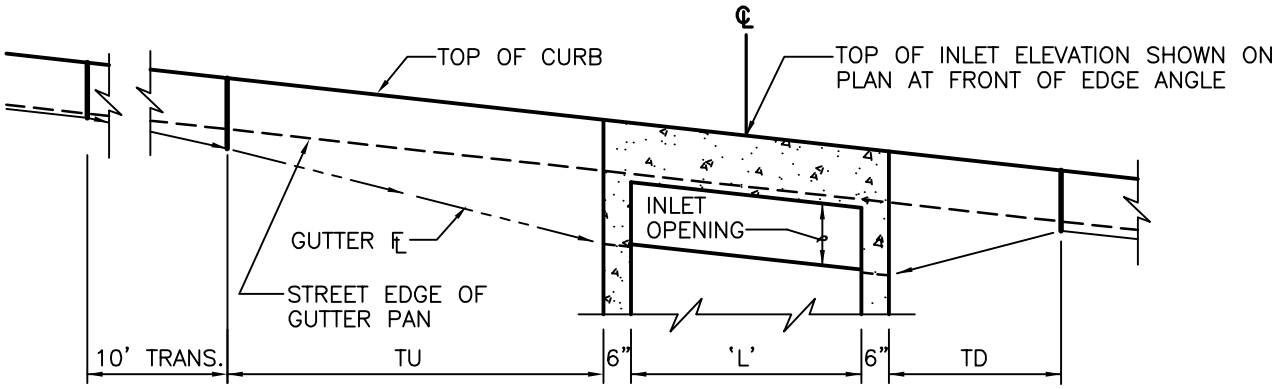

ON SLOPE

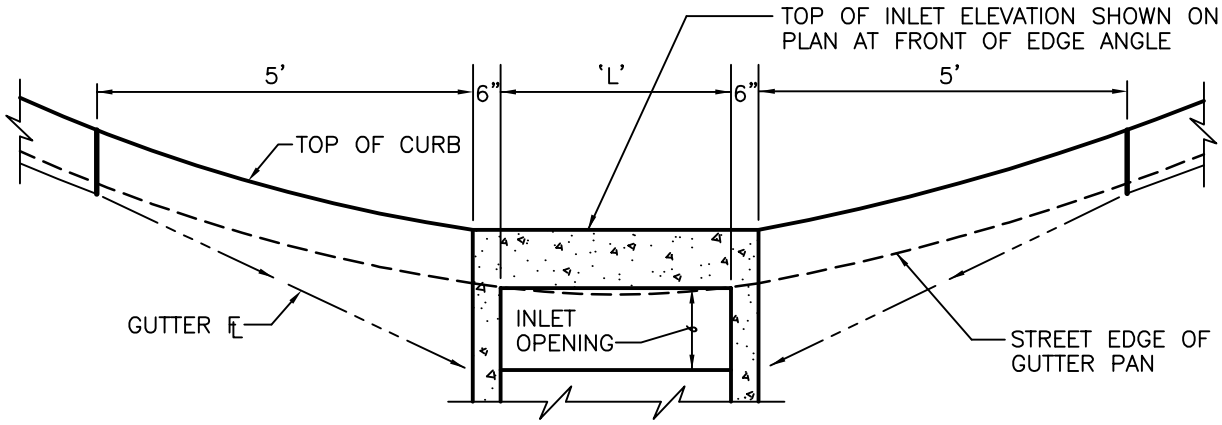

AT LOW POINT

INLET SETTING DIAGRAMS

Approved 6/01/16 Date	City of Columbia Public Works Department	TYPE M INLET SETTING DIAGRAM	505.01D
Revisions			

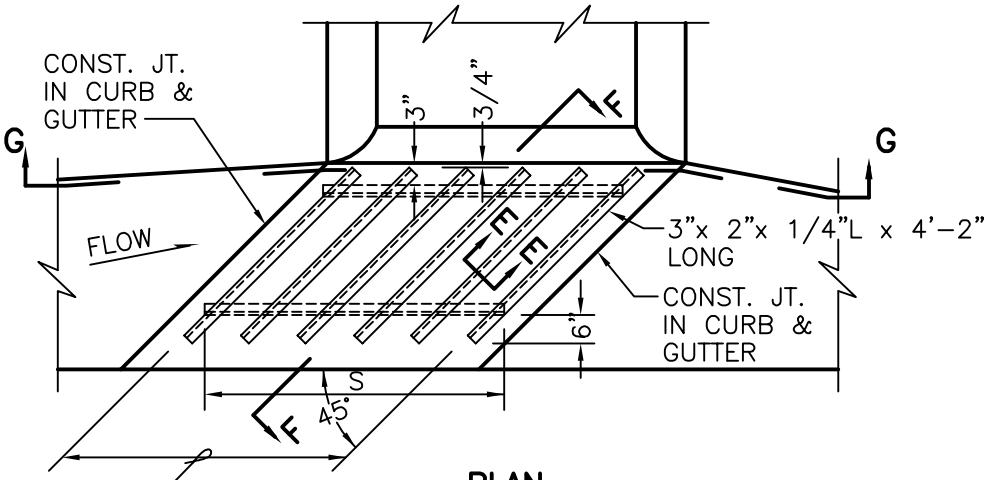

PLAN

DEFLECTORS TO BE EQUALLY SPACED

- FOR L=4'; 6 DEFLECTORS–S=4'–6"
- FOR L=6'; 8 DEFLECTORS–S=6'–6"
- FOR L=8'; 11 DEFLECTORS–S=8'–6"
- FOR L=10'; 13 DEFLECTORS–S=10'–6"

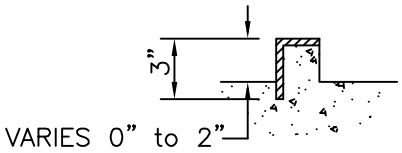

SECTION E–E

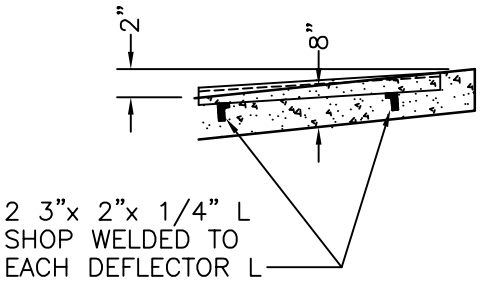

SECTION F–F

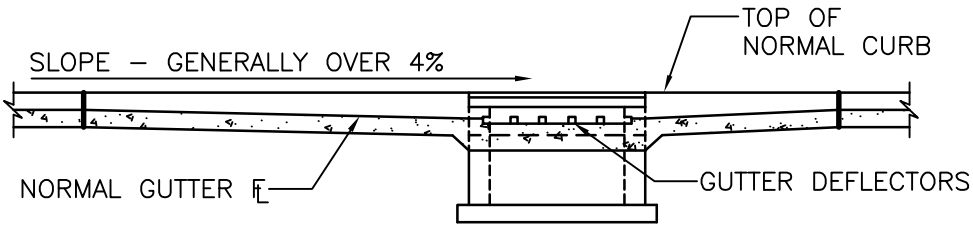

SECTION G–G

GUTTER DEFLECTOR NOTES:

1. ASSEMBLY TO BE HOT DIP GALVANIZED.
2. TO BE USED WHERE DEFLECTOR CURB INLET IS SPECIFIED
3. BEFORE PLACING CONCRETE; SUPPORT UNIT SECURELY IN FINAL POSITION BY ATTACHING TO METAL RODS DRIVEN INTO SUBGRADE

Approved	6/01/16 Date	City of Columbia Public Works Department	TYPE M INLET DEFLECTOR DETAIL	505.01E
Revisions				

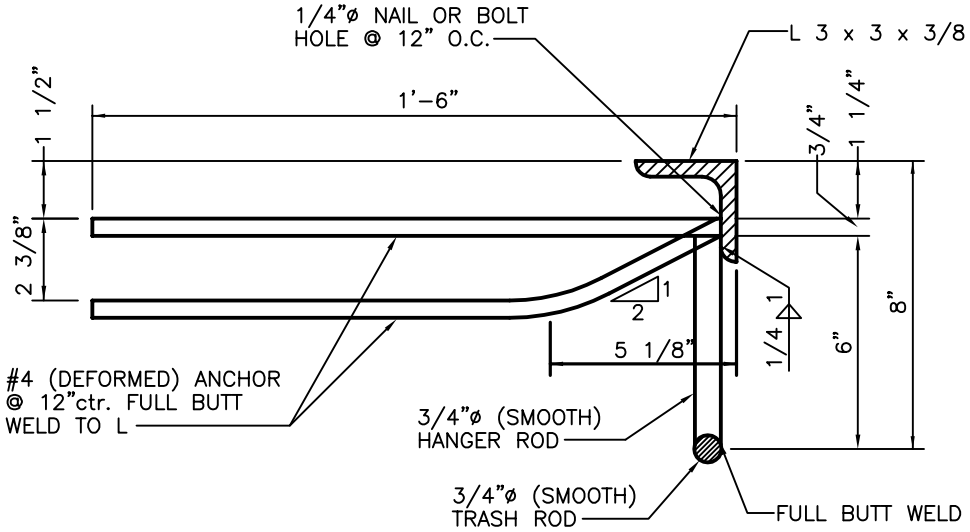

SECTION

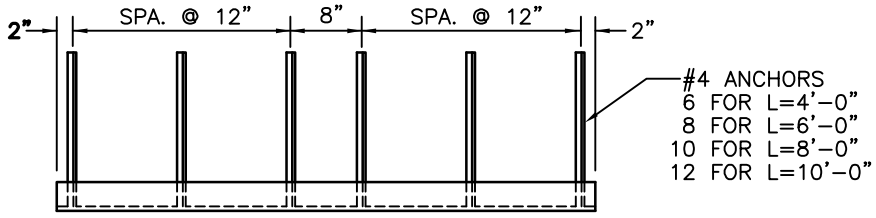

PLAN
3/4"= 1'-0"

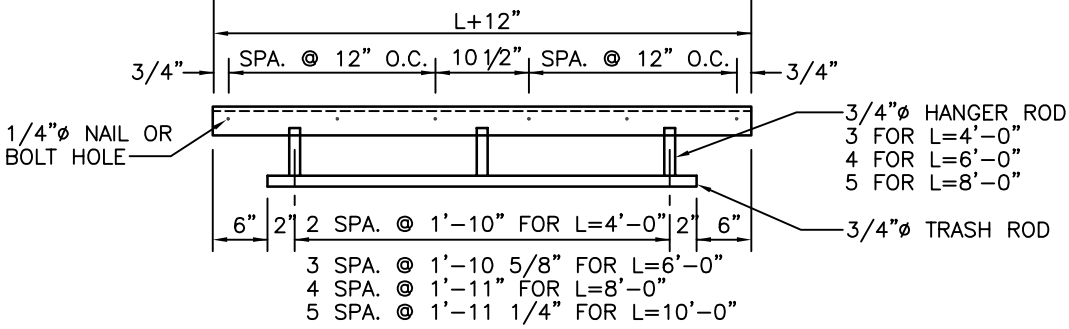

FRONT ELEV.

NOTES:

1. STRUCTURAL STEEL SHALL BE GRADE A-36
2. EXPOSED STEEL SURFACES TO BE FINISHED SMOOTH.
3. HOT DIP GALVANIZE ASSEMBLY, EXCEPT THAT GALV. NOT REQUIRED ON DEFORMED ANCHORS. CHIPPING NOT REQUIRED ON ANCHOR WELDS.
4. NAILS OR BOLTS USED TO ANCHOR ANGLE ASSEMBLY TO FORM SHALL BE REMOVED OR CUT OFF FLUSH WITH SURFACE OF ANGLE.
5. DIMENSION "L" REPRESENTS THE INSIDE INLET DIMENSION.

Approved	6/01/16 Date	City of Columbia Public Works Department	TYPE M INLET EDGE ANGLE ASSEMBLY	505.01F
Revisions				

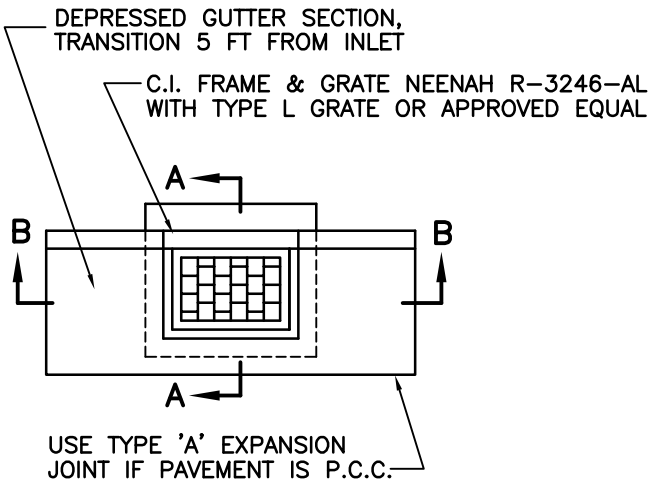

PLAN – SINGLE

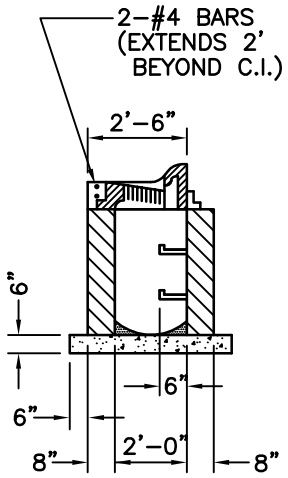

SECTION A–A
ALTERNATE

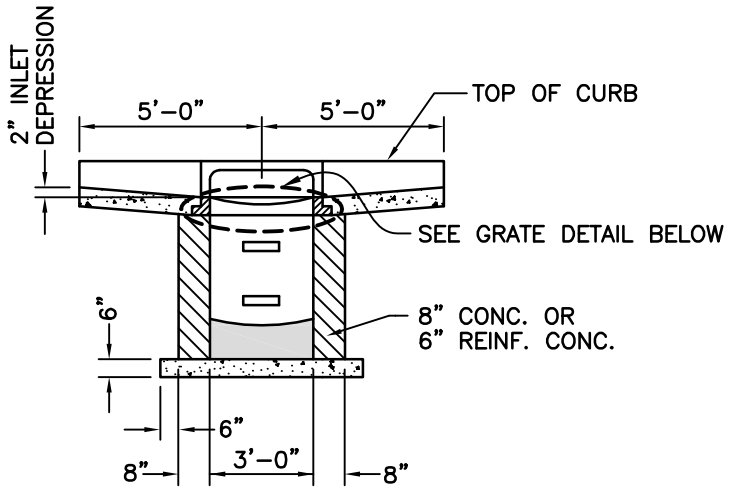

SECTION B–B

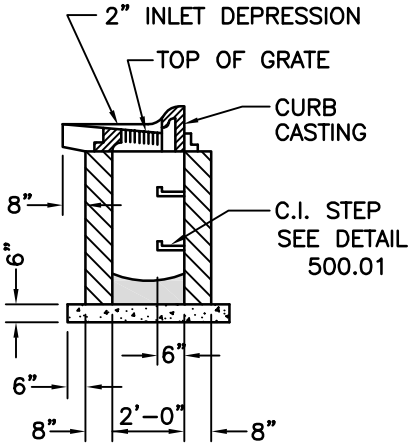

SECTION A–A

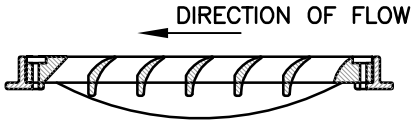

GRATE DETAIL

NOTES:

1. CONCRETE SHALL BE CLASS E FOR BASES AND D FOR WALLS AND TOP.
2. REINFORCING STEEL SHALL BE GRADE 60
3. INSTALL WEEP HOLES AS PER DETAIL 500.04
4. STRUCTURES WHERE H>8' SHALL BE REINFORCED CONCRETE (#4 BARS AT 12" CTRS, BOTH WAYS AND #4 BARS DIAGONAL AT PIPE OPENINGS)

Approved	6/01/16 Date	City of Columbia Public Works Department	SINGLE TYPE "A" INLET	505.02A
Revisions				

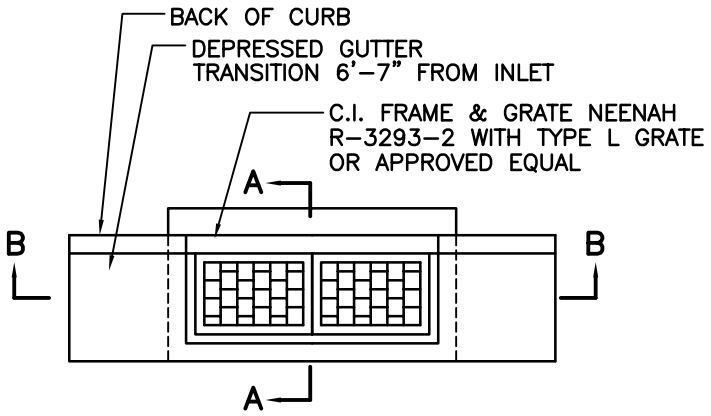

PLAN – DOUBLE

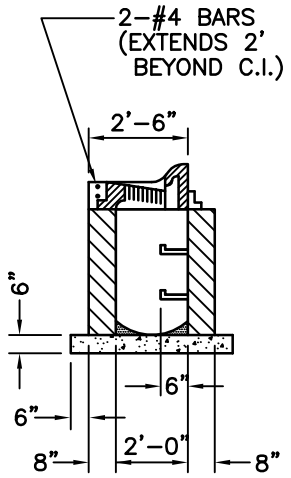

SECTION A–A
ALTERNATE

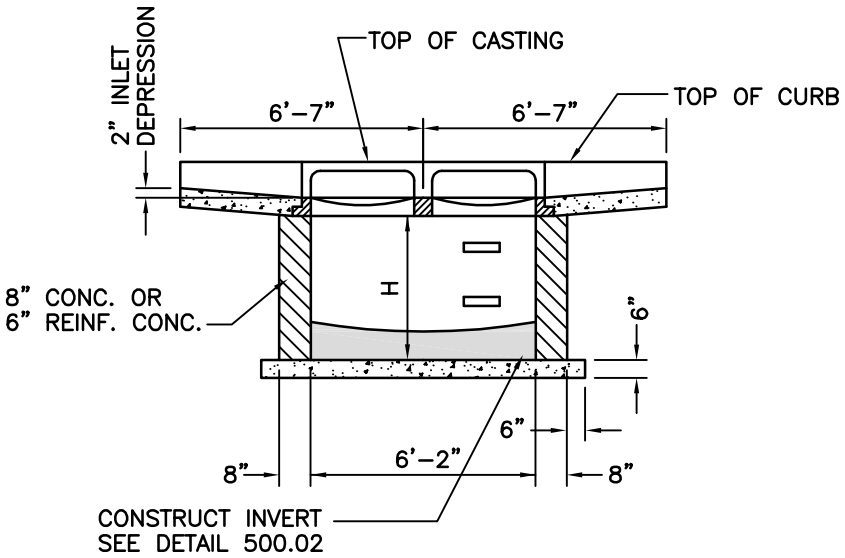

SECTION B–B

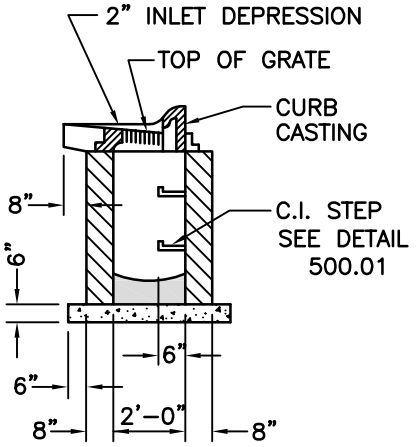

SECTION A–A

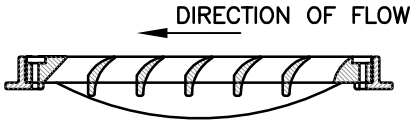

GRATE DETAIL

NOTES:

1. CONCRETE SHALL BE CLASS E FOR BASES AND D FOR WALLS AND TOP.
2. REINFORCING STEEL SHALL BE GRADE 60
3. INSTALL WEEP HOLES AS PER DETAIL 500.04
4. STRUCTURES WHERE H>8' SHALL BE REINFORCED CONCRETE (#4 BARS AT 12" CTRS, BOTH WAYS AND #4 BARS DIAGONAL AT PIPE OPENINGS)

Approved 6/01/16 Date	City of Columbia Public Works Department	DOUBLE TYPE "A" INLET	505.02B
Revisions			

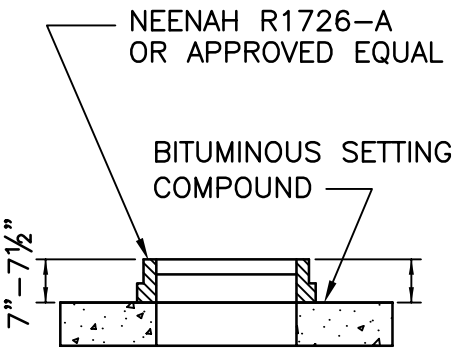

ALTERNATE TOP

(MUST BE USED UNDER PAVEMENTS ONLY)

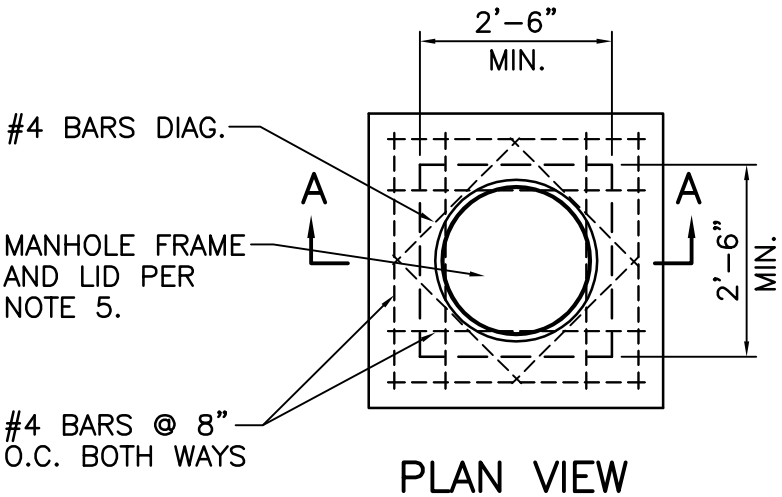

PLAN VIEW

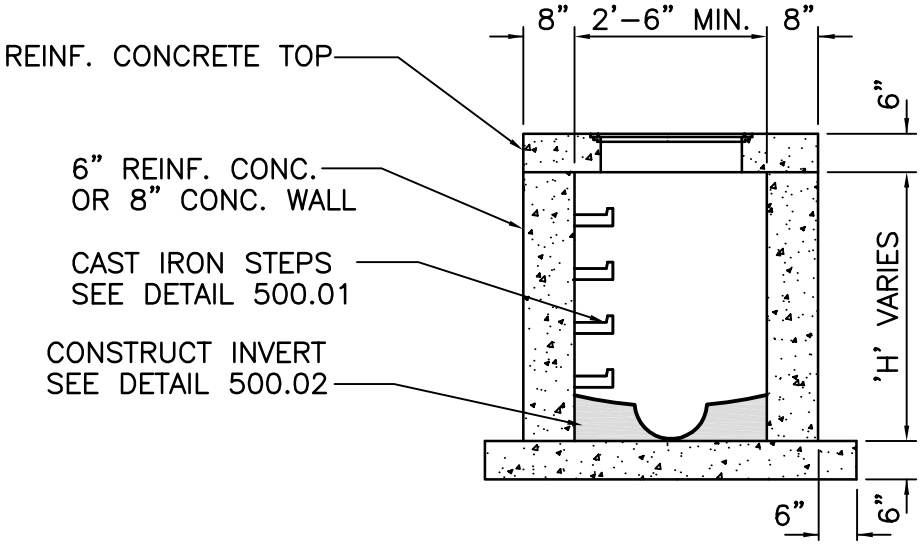

SECTION A–A

(Showing Standard Flush Top)

NOTES:

1. CONCRETE SHALL BE CLASS E FOR BASES AND D FOR WALLS AND TOP.
2. REINFORCING STEEL SHALL BE GRADE 60
3. INSTALL WEEP HOLES AS PER DETAIL 500.04
4. STRUCTURES WHERE H>8' SHALL BE REINFORCED CONCRETE (#4 BARS AT 12" CTRS, BOTH WAYS AND #4 BARS DIAGONAL AT PIPE OPENINGS)
5. FRAME AND LID SHALL BE NEENAH R–1960–A (TYPE C LID) OR APPROVED EQUAL. SEE DETAIL 500.01 FOR PLACEMENT.

Approved	6/01/16 Date	City of Columbia Public Works Department	JUNCTION BOX	510.01
Revisions			

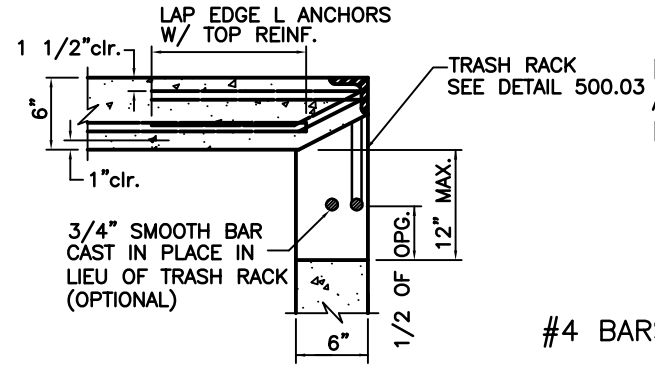

OPENINGS OVER 6"

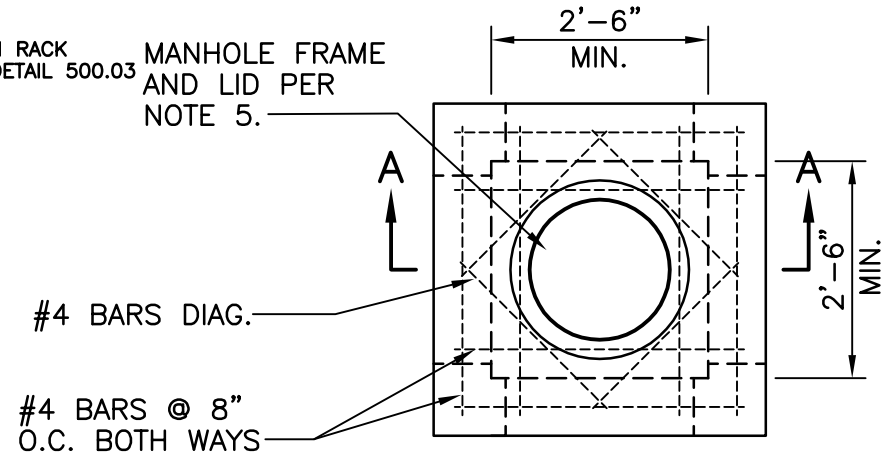

PLAN VIEW

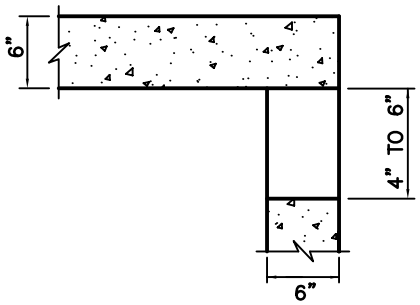

OPENINGS 4" TO 6"

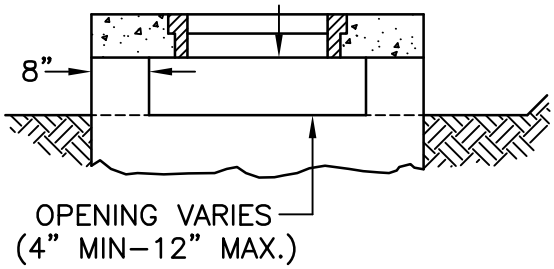

SIDE OPENING DETAIL

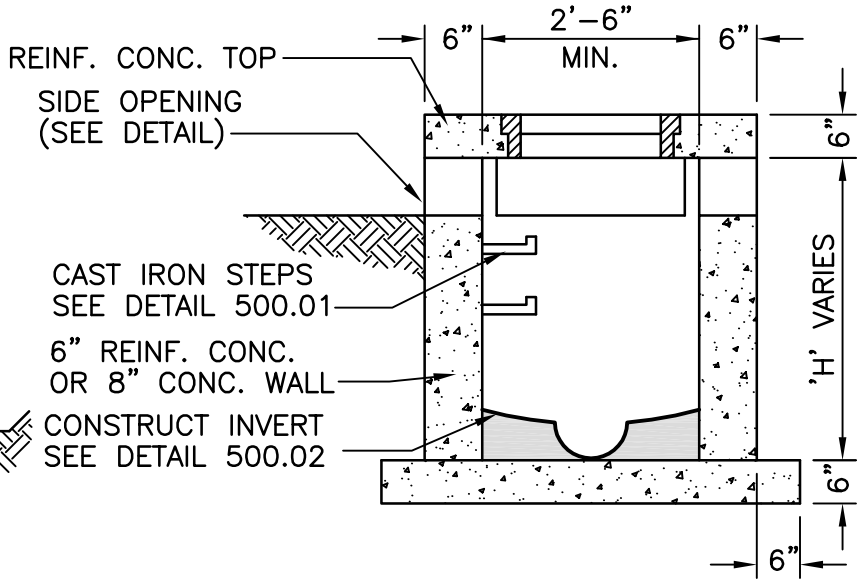

SECTION A-A

NOTES:

1. CONCRETE SHALL BE CLASS E FOR BASES AND D FOR WALLS AND TOP.
2. REINFORCING STEEL SHALL BE GRADE 60
3. INSTALL WEEP HOLES AS PER DETAIL 500.04
4. STRUCTURES WHERE H>8' SHALL BE REINFORCED CONCRETE (#4 BARS AT 12" CTRS, BOTH WAYS AND #4 BARS DIAGONAL AT PIPE OPENINGS)
5. FRAME AND LID SHALL BE NEENAH R-1960-A (TYPE C LID), DEETER 1180, OR APPROVED EQUAL. SEE DETAIL 500.01 FOR PLACEMENT.
6. SIDE OPENINGS TO BE ON ALL FOUR SIDES UNLESS NOTED OTHERWISE
7. INSTALL TRASH RACK ON OPENINGS OVER 6" SEE DETAIL 500.03

Approved	6/01/16 Date	City of Columbia Public Works Department	SIDE OPENING INLET	510.02
Revisions				

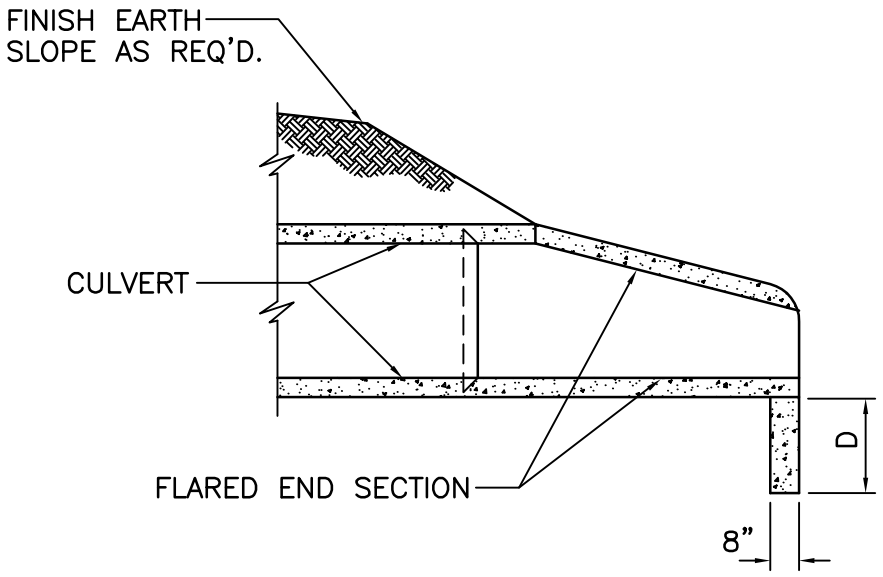

SECTION VIEW

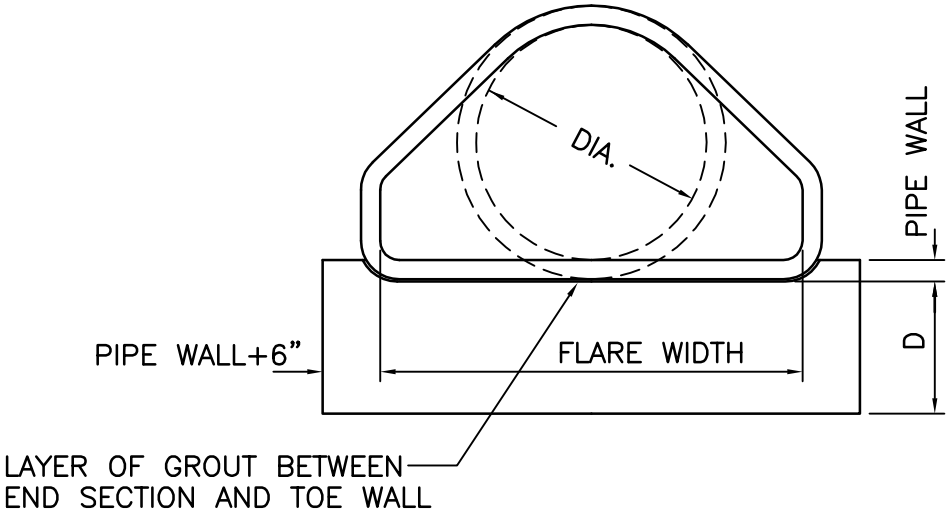

END VIEW

NOTE:

1. CONCRETE FOR TOE WALL SHALL BE CLASS E
2. D=18" FOR PIPES WITH INSIDE DIAMETER 21" OR LESS.
3. D=24" FOR PIPES WITH INSIDE DIAMETER FROM 24" TO 48".
4. D=36" FOR PIPES WITH INSIDE DIAMETER 54" OR MORE.

Approved	6/01/16 Date	City of Columbia Public Works Department	TOEWALL & END SECTION FOR RCP	525.01A
Revisions				

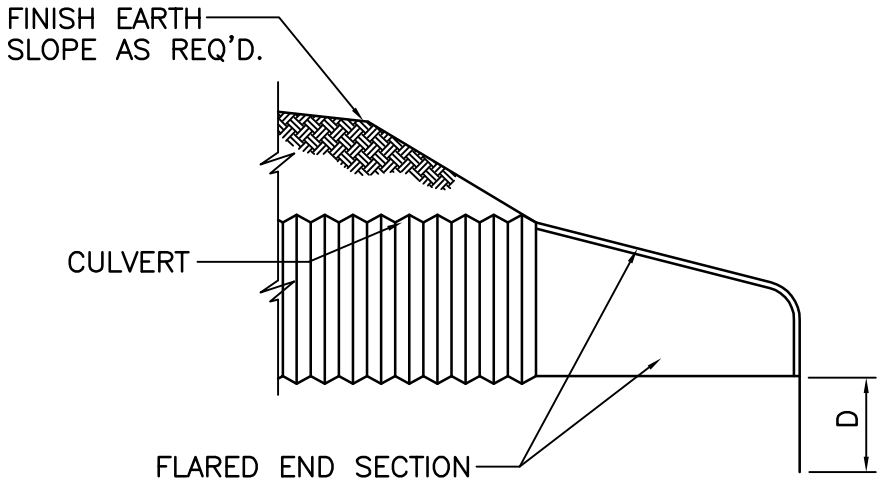

SECTION VIEW

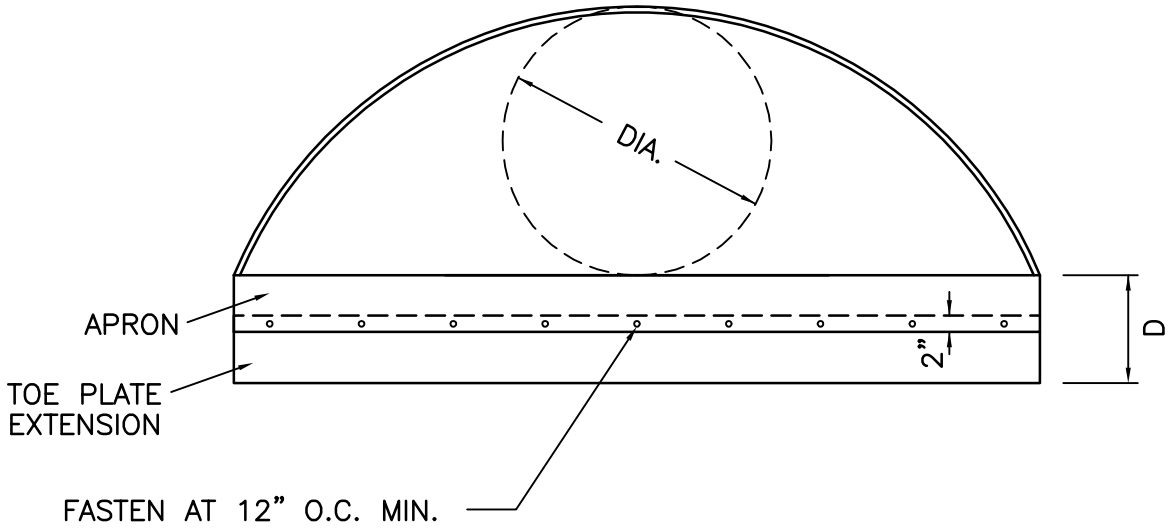

END VIEW

NOTE:

1. D=12" FOR PIPES WITH INSIDE DIAMETER 24" OR LESS.
2. D=18" FOR PIPES WITH INSIDE DIAMETER 27" OR MORE.
3. EXTENSION PLATE SHALL BE SAME MATERIAL AS PIPE. THICKNESS SHALL BE EQUAL TO EQUIVALENT DIAMETER CMP GAUGE.
4. APRON AND TOE PLATE SHALL BE SECURELY FASTENED WITH SPOT WELDS, BOLTS, OR RIVETS.

Approved	6/01/16 Date	City of Columbia Public Works Department	END SECTION FOR HDPE AND CMP	525.01B
Revisions				

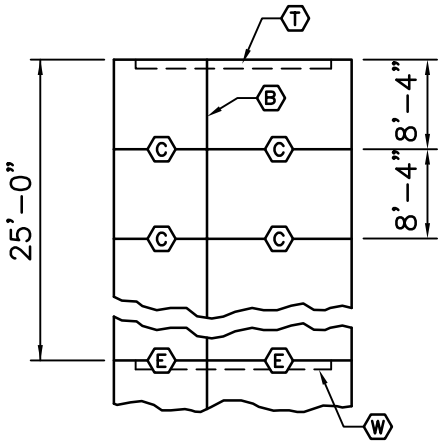

PLAN VIEW

LEGEND

- (C) SAW JOINT, FILL WITH BITUMASTIC JOINT SEALANT – SEE DETAIL.
- (E) 1/2" EXPANSION JOINT AT 50' INTERVALS.
- (T) TOE WALL TO BE CONSTRUCTED AT INLET & OUTLET END OF PAVED DITCHES.
- (B) KEY JOINT (SEE DETAIL)
- (W) CUT–OFF WALL @ 25'–0" SPA.

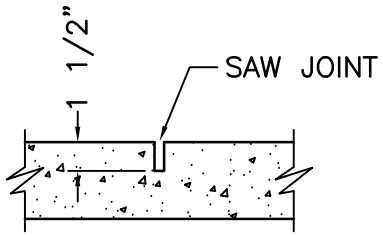

C JOINT DETAIL

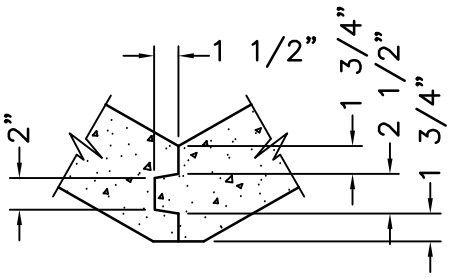

B JOINT DETAIL

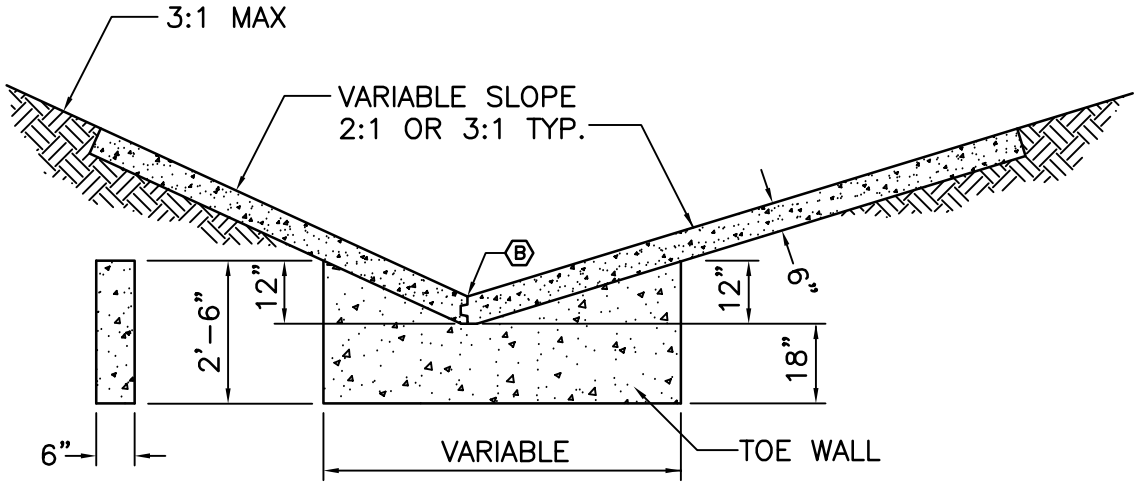

END SECTION

SECTION THROUGH SWALE

SHOWING TOE WALL OR CUT–OFF WALL

NOTE:
CONCRETE SHALL BE CLASS E

Approved
Revisions
6/01/16
Date

City of Columbia
Public Works Department

CONCRETE SWALE
(V-Type)

530.01

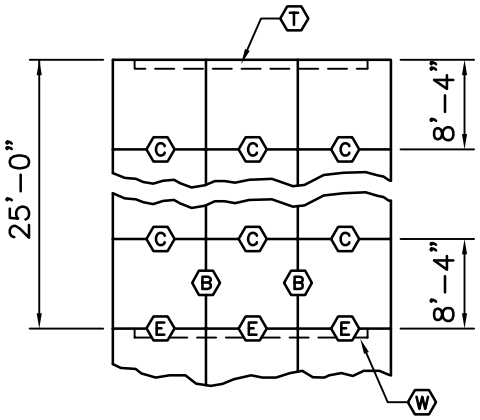

PLAN VIEW

LEGEND

- (C) SAW JOINT, FILL WITH BITUMASTIC JOINT SEALANT – SEE DETAIL.
- (E) 1/2" EXPANSION JOINT AT 50' INTERVALS
- (B) KEY JOINT (SEE DETAIL)
- (T) TOE WALL TO BE CONSTRUCTED AT INLET & OUTLET END OF PAVED DITCHES.
- (W) CUT–OFF WALL @ 25'–0" SPA.

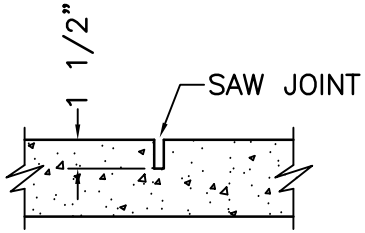

JOINT DETAIL

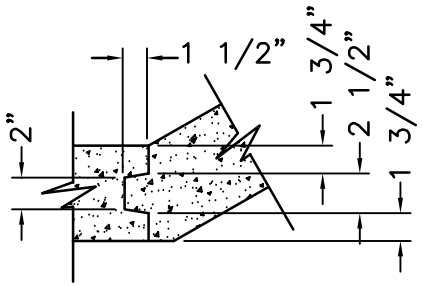

B JOINT DETAIL

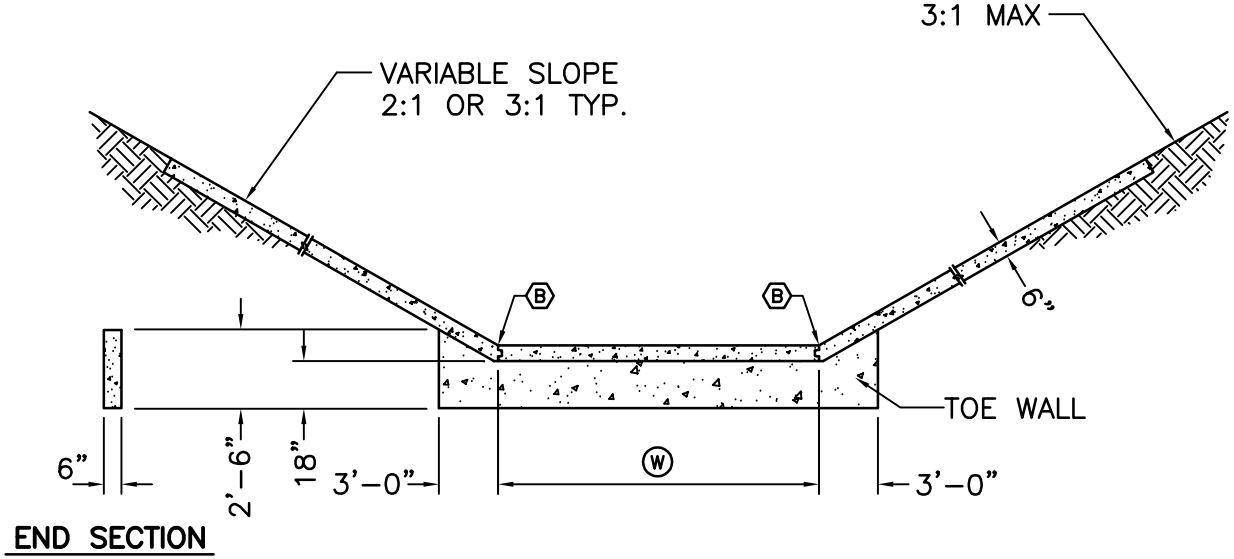

END SECTION

SECTION THROUGH SWALE

SHOWING TOE WALL OR CUT–OFF WALL

NOTE:
CONCRETE SHALL BE CLASS E

Approved 6/01/16
Date
Revisions

City of Columbia
Public Works Department

CONCRETE SWALE
(Flat-Bottom Type)

530.02

Pipe Size (in)	Maximum Pipe Slope (%)	Length L (ft)	Bottom Width BW Minimum (ft)	Top Width TW Minimum (ft)	Thickness T Minimum (ft)
12	3.50	12	4	8	2
15	2.60	15	4	9	2
18	2.00	16	4	10	2
24	1.70	20	4	12	2
30	1.40	24	6	16	2
36	1.00	28	6	18	2
42	0.80	32	6	20	3
48	0.65	36	6	22	3
54	0.55	40	8	26	3
60	0.45	44	8	28	3
72	0.40	48	8	32	3

RIP RAP TO BE TYPE 1: ROCK MUST BE ANGULAR, HARD AND DURABLE.

ROCK LINER FABRIC SHALL BE PROPEX GEOTEX 801 OR APPROVED EQUAL. ALTERNATIVELY, AN 8 INCH BED OF WELL GRADED SAND AND GRAVEL WITH GRAVEL UP TO 3" IS ACCEPTABLE.

WHERE BEDROCK IS ENCOUNTERED, RIP RAP MAY BE OMMITTED.

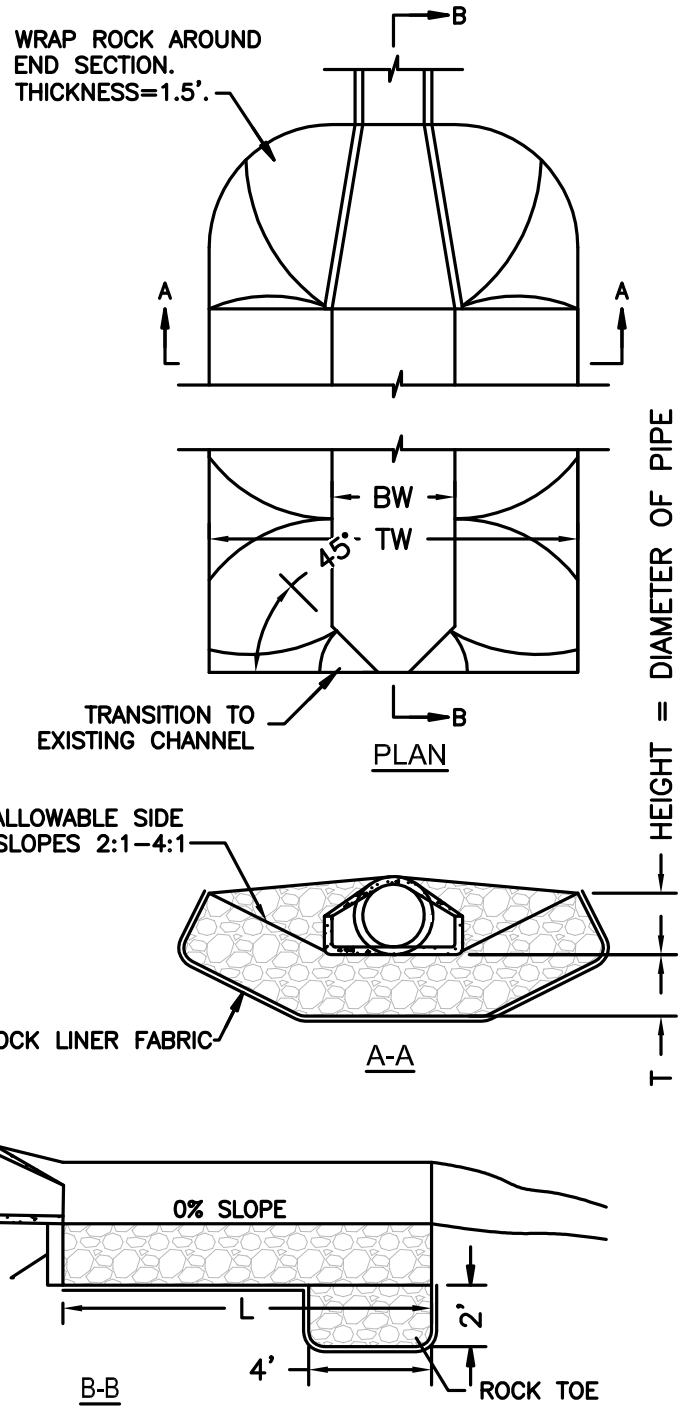

Approved 6/01/16 Date

Revisions

City of Columbia
Public Works Department

RIP RAP WITH FILTER FABRIC

530.03

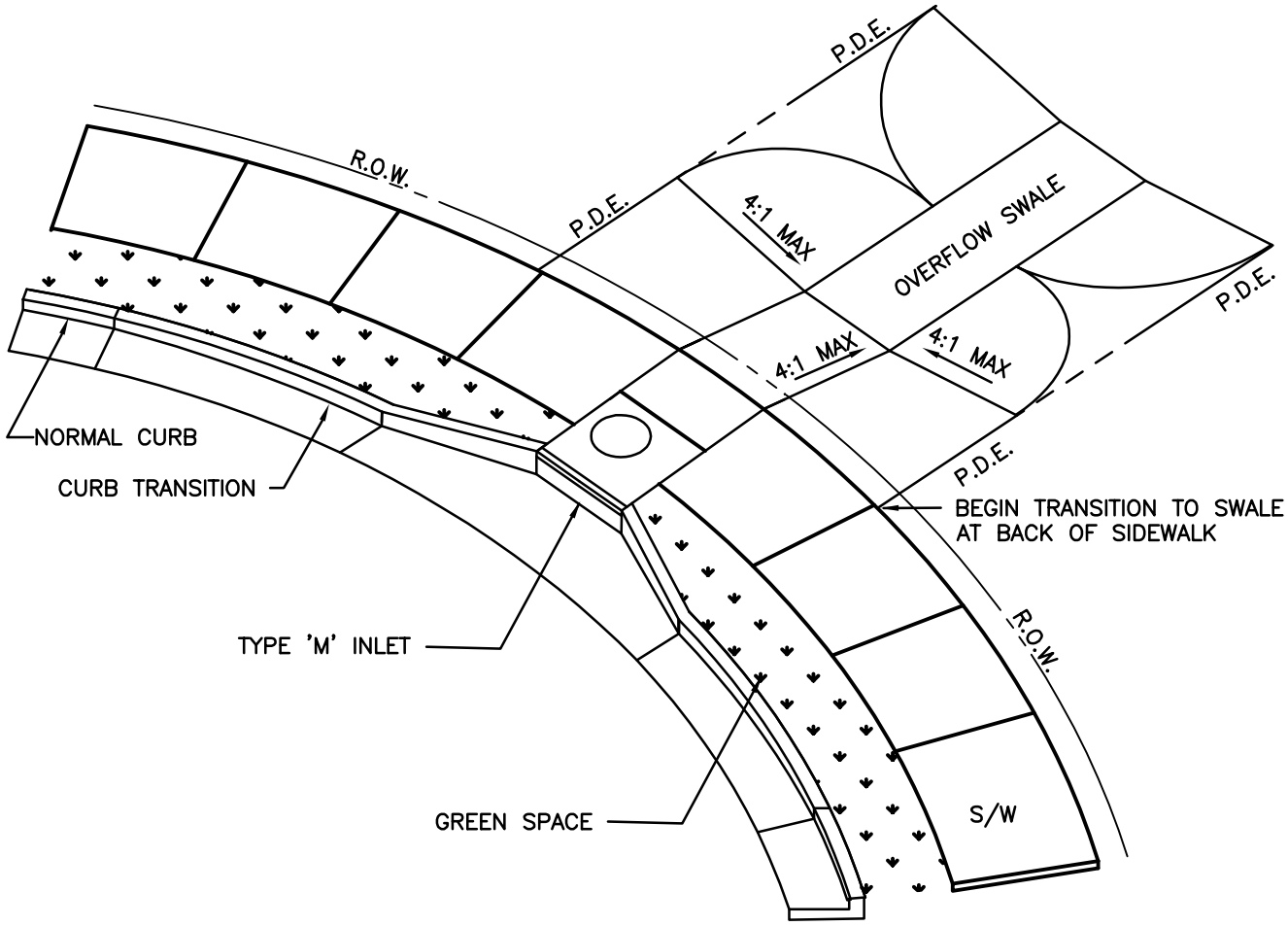

Approved	6/01/16 Date	City of Columbia Public Works Department	OVERFLOW SWALE AT CUL-DE-SAC	530.04
Revisions				

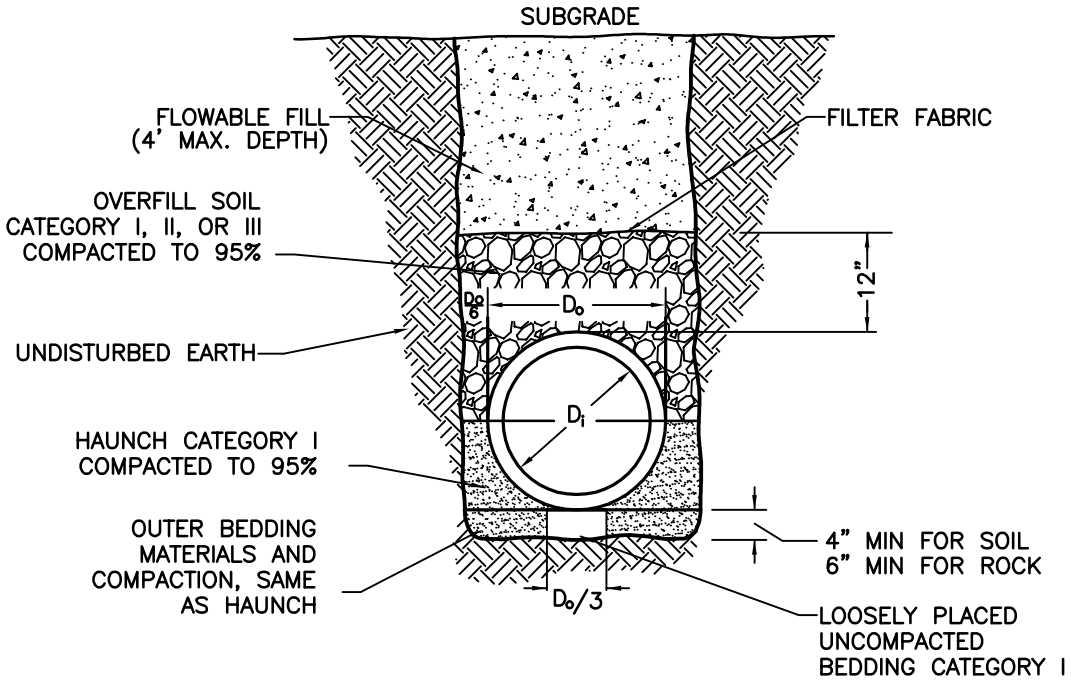

RIGID PIPE

PIPE DIAMETER	PAYLINE/ MIN. TRENCH WIDTH	MAX. TRENCH WIDTH
12"–36"	D_o+12"	D_o+24"
42"–72"	D_o+(D_o/3)	D_o+30"
72"+	D_o+(D_o/3)	D_o+48"

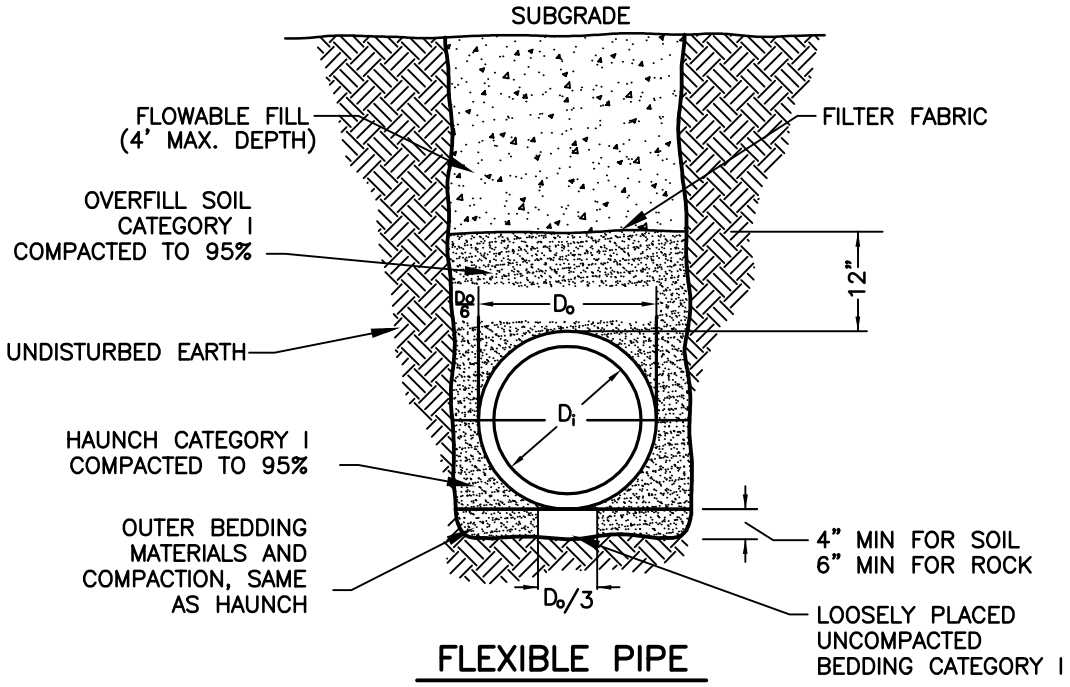

FLEXIBLE PIPE

Approved 6/01/16 Date

Revisions

City of Columbia
Public Works Department

PIPE EMBEDMENT
(In the Right of Way)

540.01

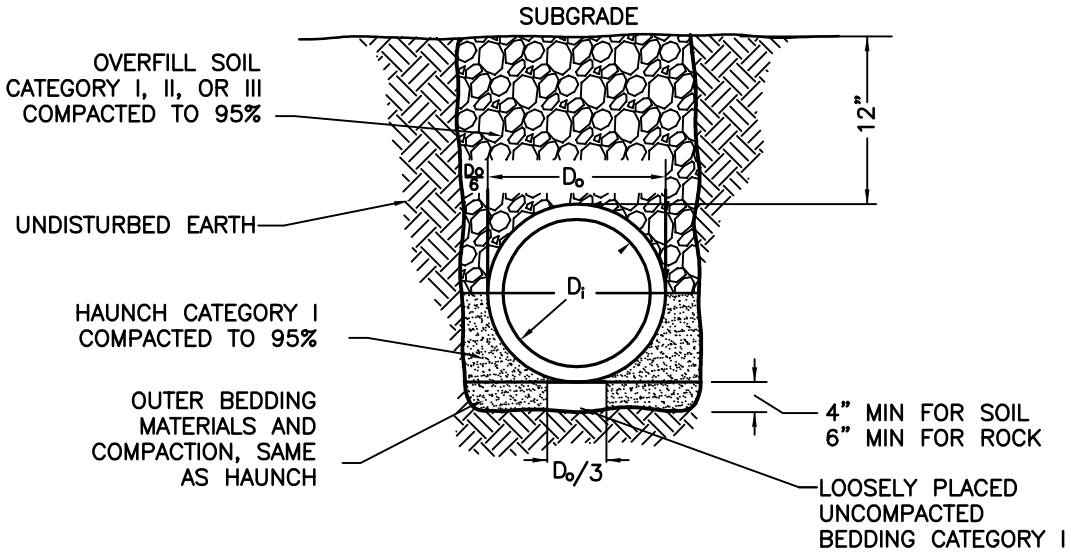

RIGID PIPE

PIPE DIAMETER	PAYLINE/ MIN. TRENCH WIDTH	MAX. TRENCH WIDTH
12"–36"	D_o+12"	D_o+24"
42"–72"	D_o+(D_o/3)	D_o+30"
72"+	D_o+(D_o/3)	D_o+48"

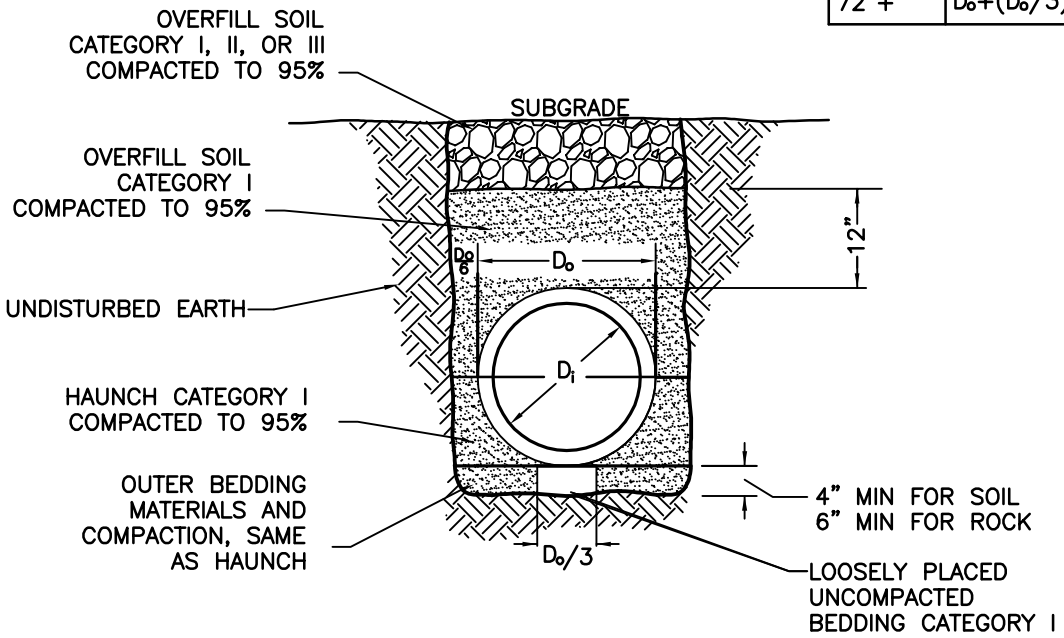

FLEXIBLE PIPE

Approved	6/01/16 Date	
Revisions		

City of Columbia
Public Works Department

PIPE EMBEDMENT
(Out of the Right of Way)

540.02

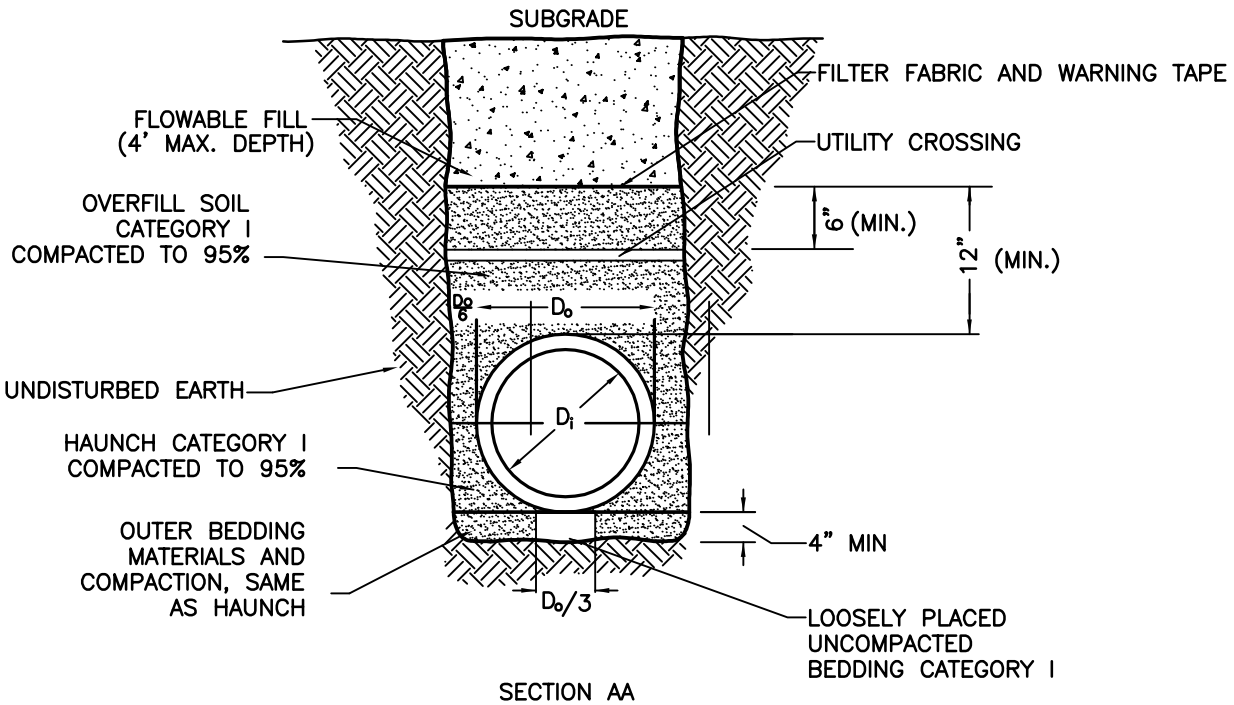

SECTION AA

PIPE DIAMETER	PAYLINE/ MIN. TRENCH WIDTH	MAX. TRENCH WIDTH
12"–36"	D_o+12"	D_o+24"
42"–72"	D_o+(D_o/3)	D_o+30"
72"+	D_o+(D_o/3)	D_o+48"

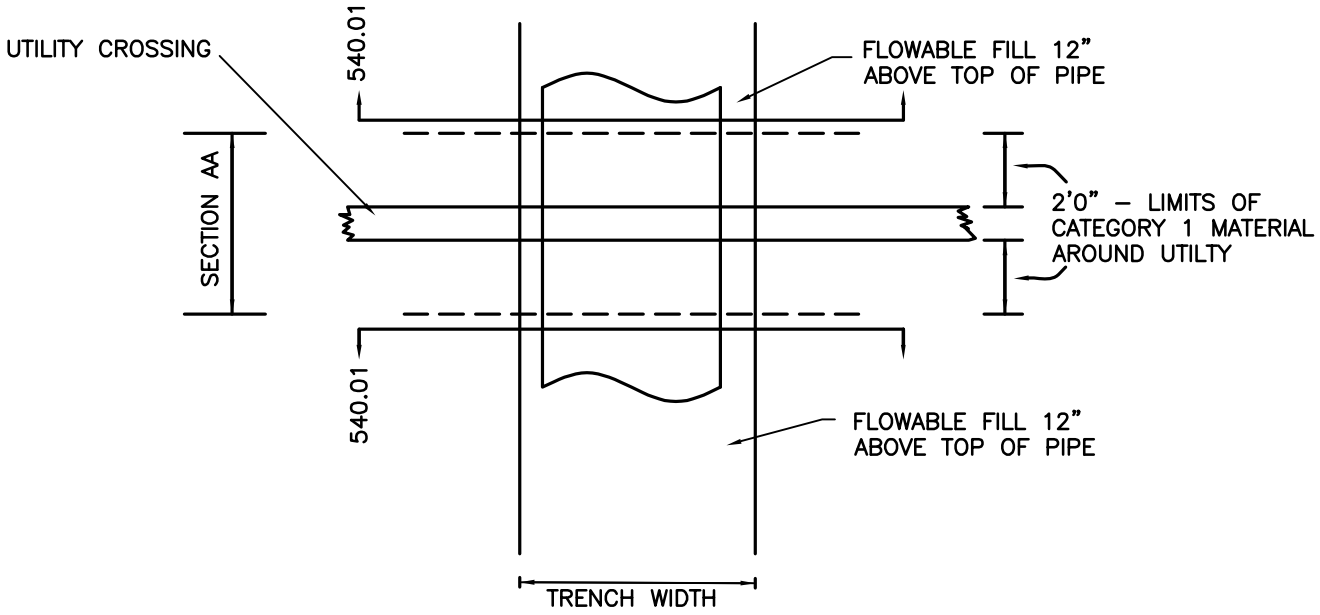

Approved	Date
	6/01/16

Revisions

City of Columbia
Public Works Department

UTILITY CROSSING
(In the Right of Way)

541.01

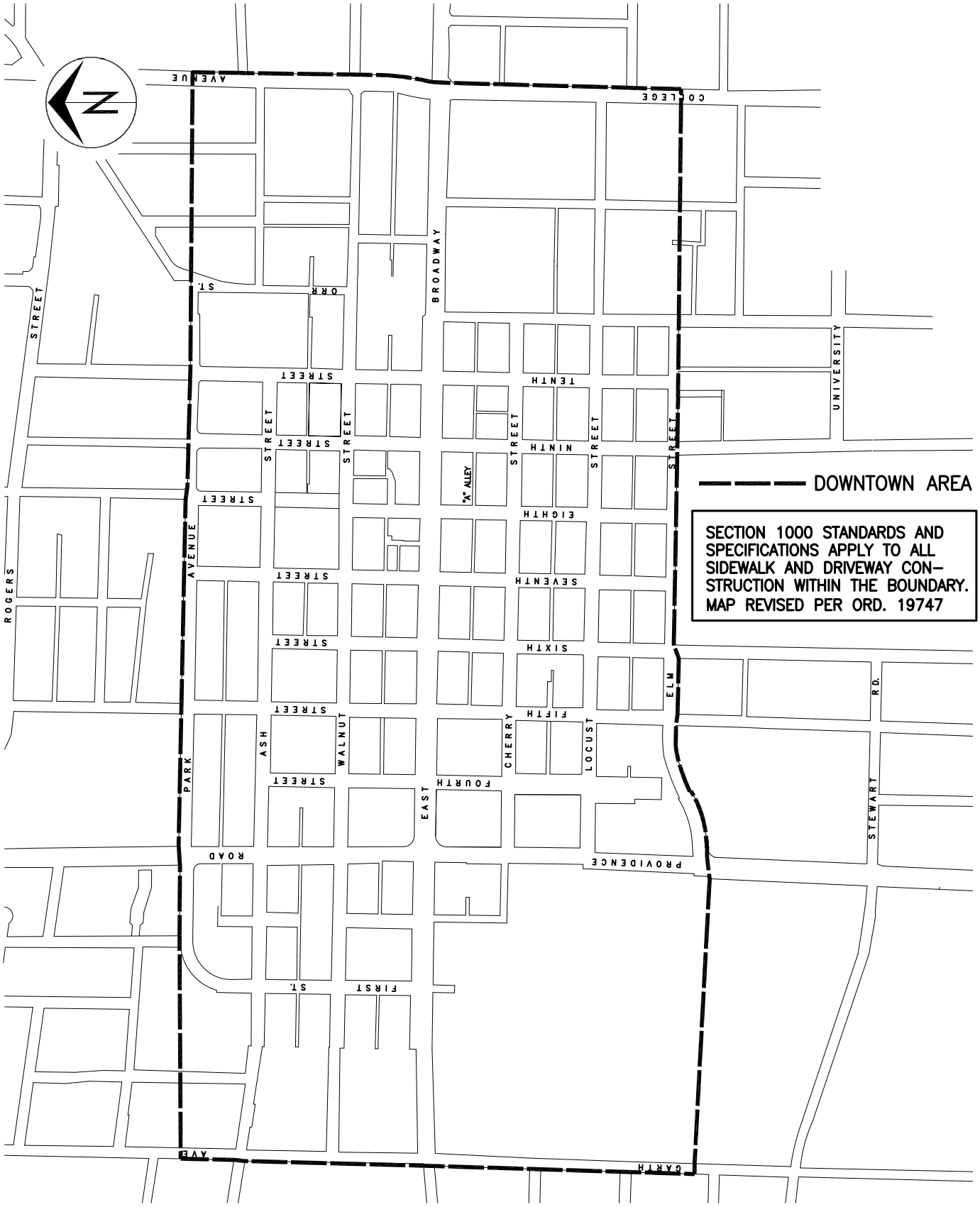

Approved 6/01/16 Date

Revisions

City of Columbia
Public Works Department

DOWNTOWN AREA MAP

1000.01A

DOWNTOWN SIDEWALK SPECIFICATIONS

SCOPE

The following Downtown Specifications and Standards are to be used for sidewalk, driveway and curb construction or replacement in the Downtown Area as outlined on drawing 1000.01A. All work within the Right of Way shall be in conformance with the City of Columbia Street and Storm Sewer Specifications and Standards, and these Downtown Sidewalk Specifications and Standards. If a conflict occurs the Downtown Sidewalk Specifications and Standards will govern.

CURBS

The curbs will be placed monolithically with the sidewalk and a saw joint will be provided 6-inches behind the face of the curb for the length of the curb. The curb shall extend a minimum of 6-inches above the existing pavement and 12-inches below the surface of the pavement. Drawing 1000.02 shows curb and sidewalk. Any variations from this standard must have the prior approval of the Director of Public Works.

CONCRETE

All concrete shall be MoDOT pavement concrete.

SIDEWALK REMOVAL AND REPLACEMENT

Whenever sidewalk is removed and replaced, removals must be made along existing saw joints. Diagonal saw cuts and partial panel replacements are not allowed.

TEXTURE

The sidewalk surface texture required shall be that achieved by brooming with a stiff or medium-stiff broom. The direction of brooming shall be transverse to the long axis of the sidewalk. All edges except sawed construction joints shall be worked with an edging tool to a 1/4-inch radius.

FINISHING OPERATIONS

Concrete finishing operations on downtown sidewalks is extremely critical. The contractor must assume the highest level of diligence in performing finishing operations to produce a high quality, durable surface.

Once the concrete has been placed, it shall be immediately struck off using a uniform strike off device free from any defects. During the strike off operation, a minimum of one inch surcharge must be maintained in front of the strike off screed. The strike off screed operations should, in most instances, seal the surface. Immediately following the strike off operation, a magnesium or aluminum bull float should be used to complete the sealing and consolidation of the surface.

This bull floating must be done prior to bleed water coming to the surface. If needed, in the Engineer's judgement, the Engineer will require a ten foot straight edge to be used immediately following the bull floating operation.

Following the evaporation of the bleed water and when the fresh concrete will support normal foot pressure with a maximum 1/8 inch indentation, the wood floating operations should be commenced, followed by the magnesium float, and brooming with a medium bristle, high quality concrete finishing broom.

The acceptable tolerance for the surface of the sidewalk area is 1/8 inch in ten feet as determined by a ten foot straight edge checking the concrete sidewalk or other area in any direction.

CONTROL JOINTS

Control joints are to be sawed to a minimum depth of 1-inch. Joints shall be sawed as soon as the concrete can withstand raveling. Joints shall be cleaned and sealed immediately following sawing. Proper care must be taken to ensure that these saw joints are uniform and straight. The following guidelines will control the size of the sidewalk pads to govern the sawing:

From 0 to 6 feet wide -
no longitudinal joint is required and the traverse joint will be at even intervals equal to the width of the sidewalk.

From 6'1" to 10'4" -
a centerline longitudinal joint is required. A transverse saw joint is required at the same distance as one-half the width of the sidewalk.

From 10'5" and up -
the longitudinal joints will be sawed to provide a minimum of 42-inches and a maximum of 5-feet between longitudinal saw joints. The transverse saw joint will be provided to form square sidewalk pads. In addition, whenever poles, fire hydrants, meters, tree grates or other obstacles are encountered, the sawing may need to be altered to control cracking at these obstacles.

EXPANSION JOINT

Expansion joint shall be ½-inch premolded fiber conforming to ASTM D2628 or D1751 of the perforated type so that the upper ½-inch can be removed and joint sealant can be placed over the expansion joint for a uniform seal. Expansion joints shall be installed along buildings, at driveways, at ramps, at structures and at intervals not to exceed 75 feet.

JOINT SEALANT

Joint sealant is required in all control, expansion and construction joints. Joint sealant shall be light gray in color. Joint sealant shall be a one or two component polysulfide polymer sealant or a one or two component polyurethane prepolymer sealant, Horn Daraseal-V or Vulkem Sealant or approved equal. Joint sealant shall be installed in accordance with manufacturer's specifications. A resilient closed cell foam backing rod, Etha Foam or approved equal, shall be used in all saw joints and placed to a depth equal to the width of the joint.

SIDEWALK ACCESSIBILITY

Accessible Sidewalk Ramps shall be provided at all intersections. Cross slopes of sidewalks shall not exceed 1:50. The preferred minimum downtown sidewalk width is 10 ft.

BLOCK OUT FOR TREES

Block outs for tree grates shall be provided in conformance with the approved downtown plan. The configuration of the block out is shown on drawings 1000.09, 1000.10A and 1000.10B. Tree grates shall be provided by the developer. Trees and soil backfill will be provided by the City.

TREES

Tree selection shall be in accordance with City Staff recommendations which are based on proven desirable growth characteristics for urban use areas. All tree selections must be approved by the City prior to installation.

VAULTS

When a sidewalk is constructed over a basement vault. The structural stability of the vault and sidewalk shall be analyzed by an Engineer or Architect.

AUTHORITY

The Director of Public Works shall have the authority in the interest of safety and maintenance to make technical refinements and modifications to these construction standards and methods during the time these standards are in effect.

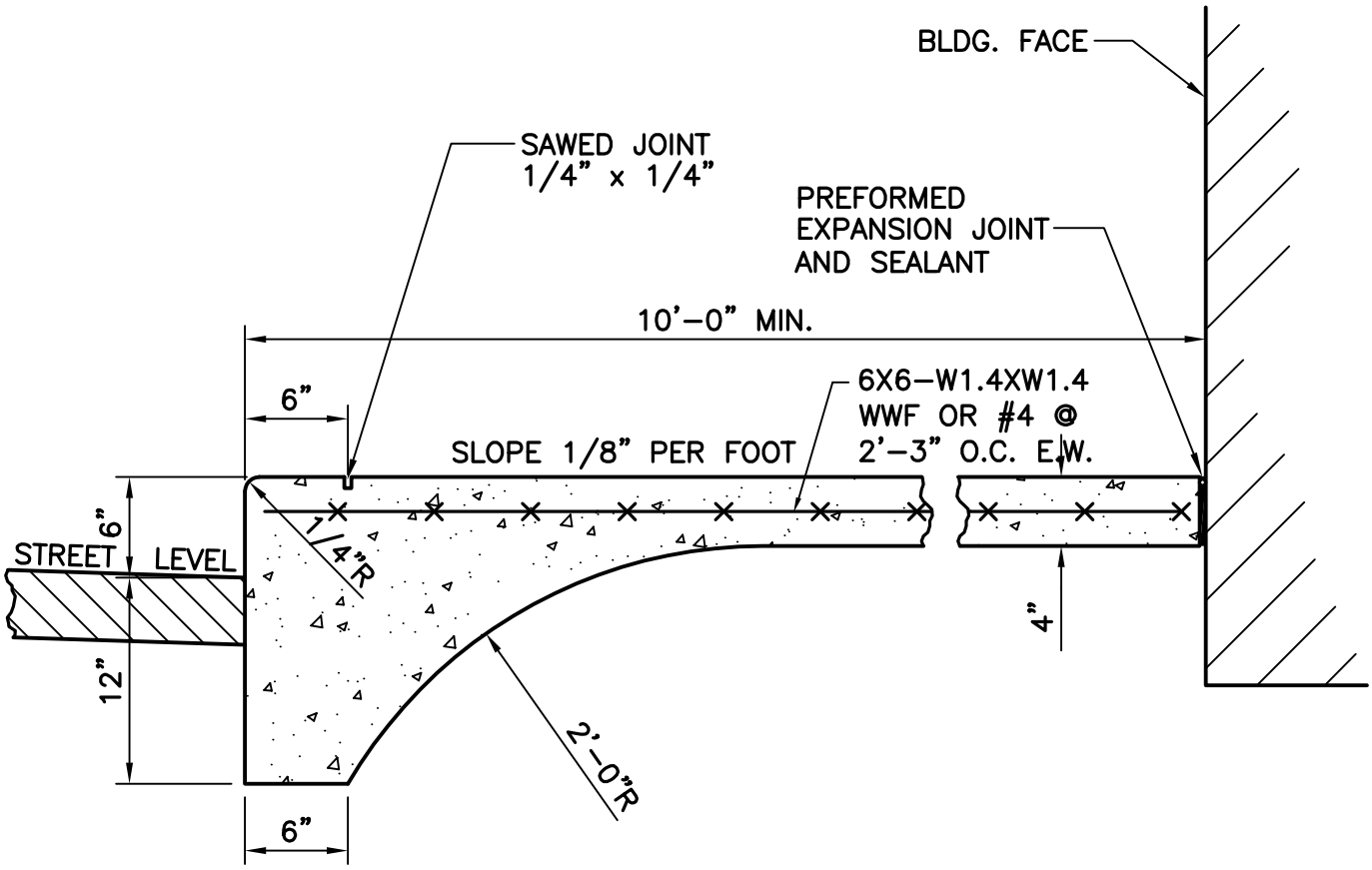

NOTES:

1. SIDEWALK CROSS SLOPE SHALL NOT EXCEED 2.00%.
2. SAW AND PATCH STREET PAVEMENT AS NECESSARY FOR CONSTRUCTION OF NEW CURB.
3. SEE JOINT DETAILS – 1000.03.
4. SEE SPECIFICATIONS – 1000.01B THRU 1000.01D.
5 NO STEEL TO BE PLACED THROUGH EXPANSION JOINT

Approved 6/01/16 Date	City of Columbia Public Works Department	DOWNTOWN SIDEWALK	1000.02
Revisions			

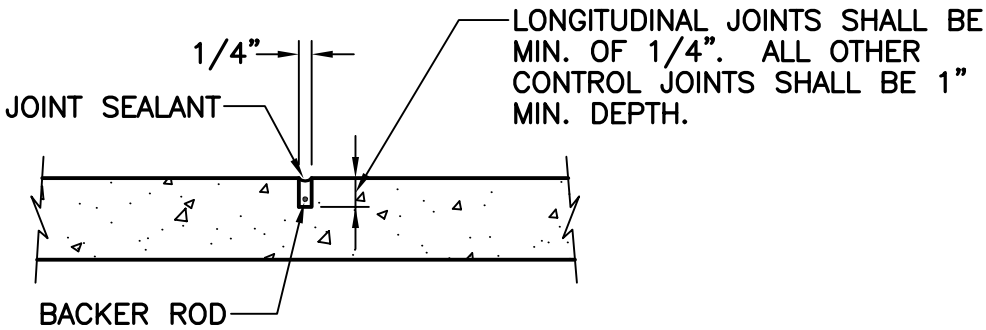

CONTROL JOINT

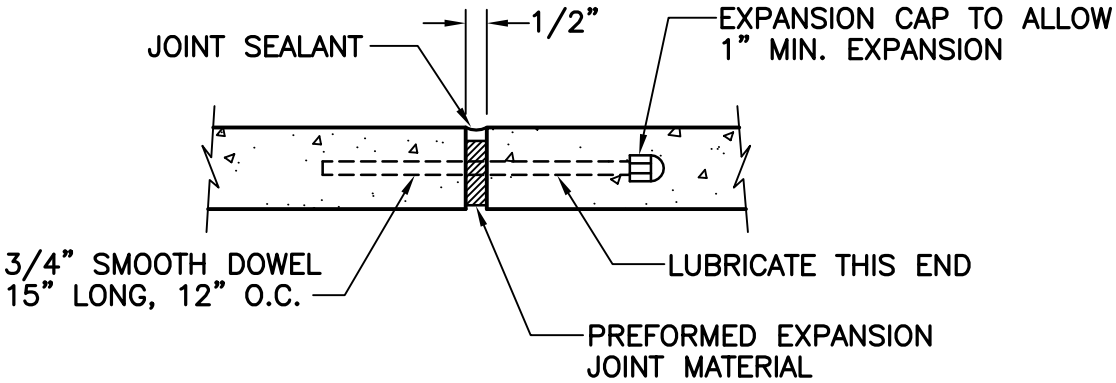

EXPANSION JOINT

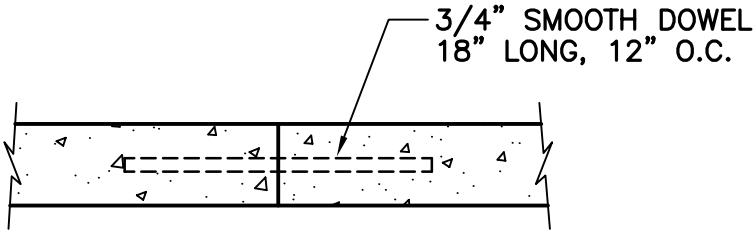

TRANSVERSE CONSTRUCTION JOINT

NOTES:

1. SEE SPECIFICATIONS – 1000.01B THRU 1000.01D.
2. ALL DRILLED DOWEL BARS SHALL BE EXPOXIED.

Approved 6/01/16 Date	City of Columbia Public Works Department	SIDEWALK JOINT DETAILS	1000.03
Revisions			

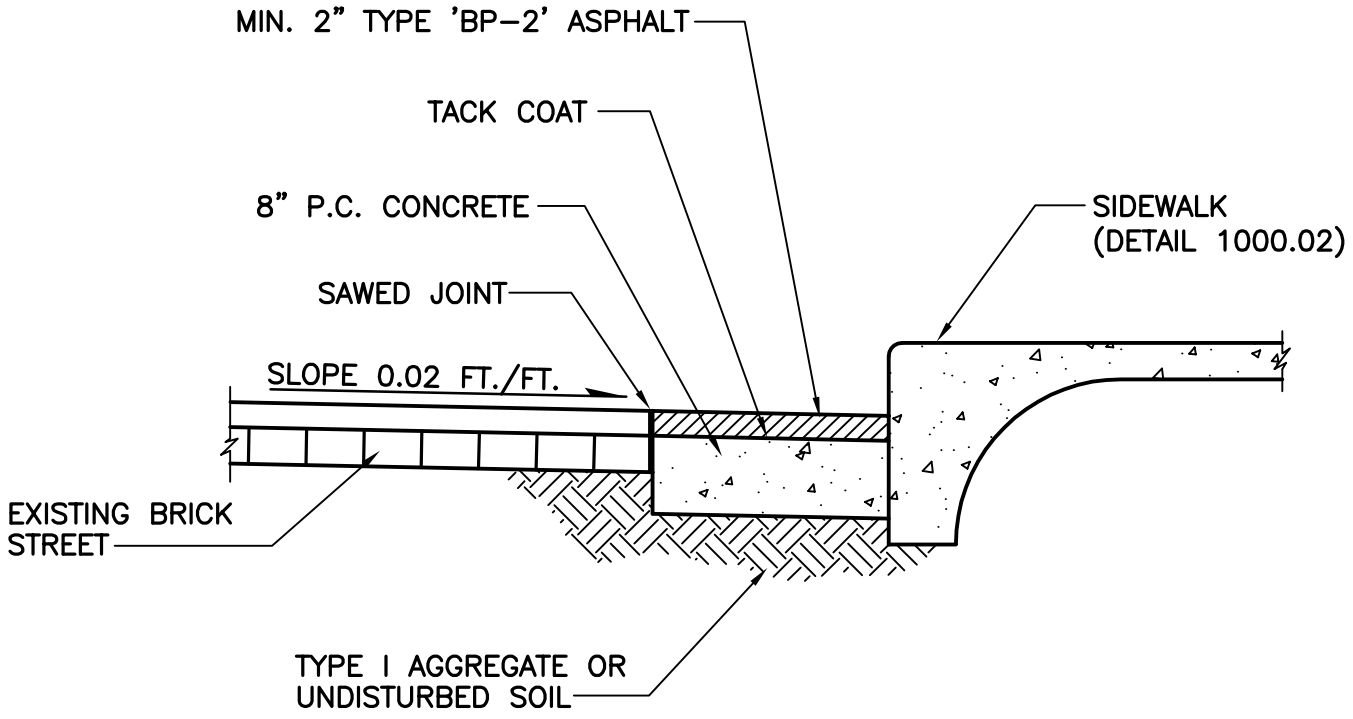

NOTE:

AREAS TO BE OVERLAID SHALL HAVE A TACK COAT OF SS-1 WATER BASED EMULSION APPLIED AT A RATE OF 0.2 GALLONS PER SQUARE YARD. THIS IS TO BE INCLUDED IN THE PRICE BID FOR "PATCHING AND LANE WIDENING" AND/OR "FULL DEPTH STREET PATCH FOR CONDUIT".

Approved	6/01/16 Date	City of Columbia Public Works Department	PAVEMENT PATCHING & LANE WIDENING	1000.04
Revisions				

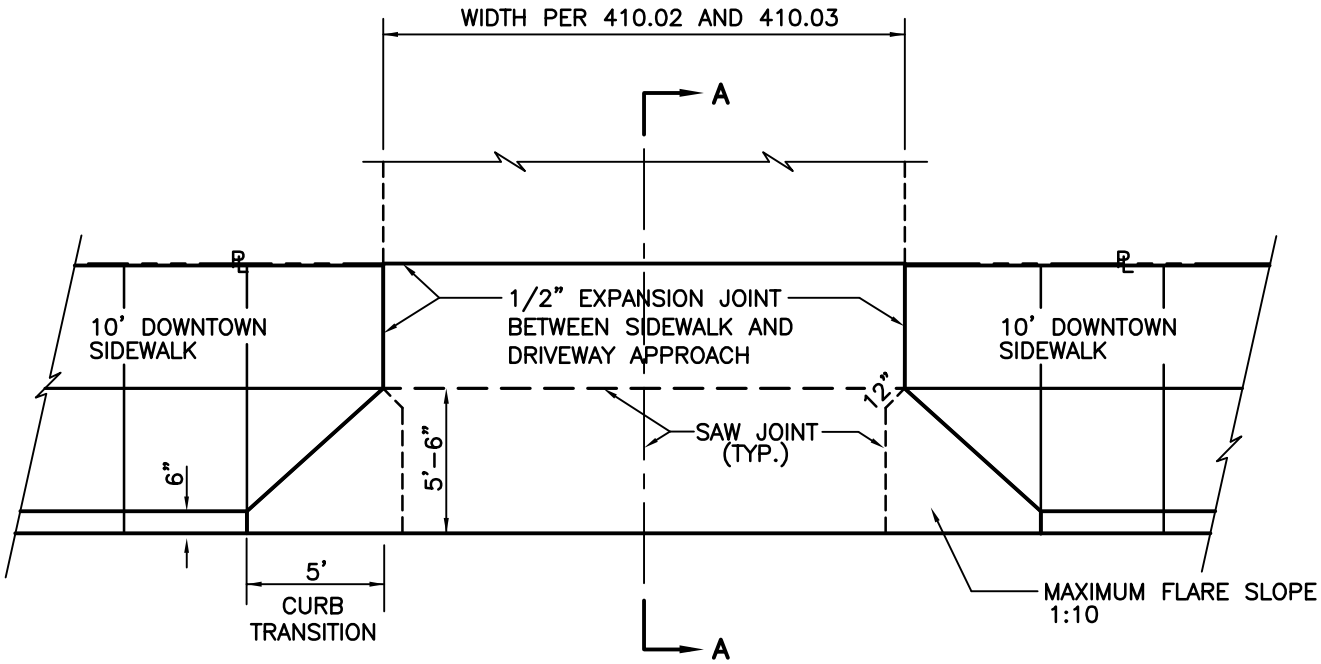

PLAN

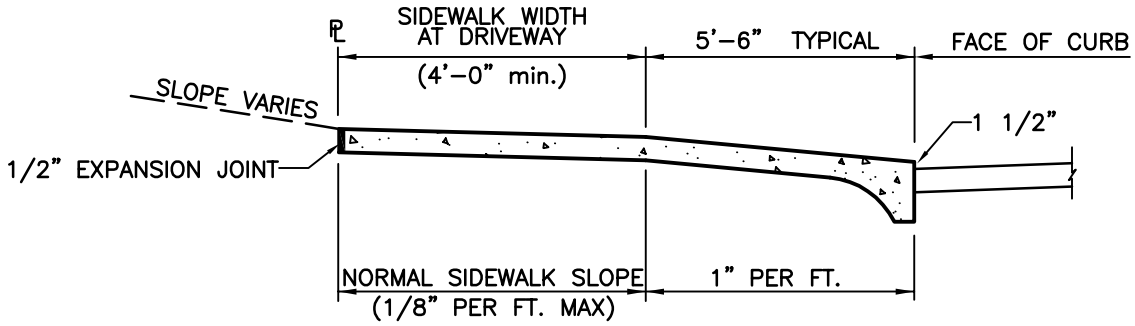

SECTION A–A

NOTES:

1. DRIVEWAY APPROACH SHALL BE 7" THICK MoDOT PAVEMENT CONCRETE.
2. SEE JOINT DETAILS – 1000.03.
3. ALL DRIVEWAY APPROACHES SHALL SLOPE TOWARD THE STREET.
4. ALL DRIVEWAY APPROACHES SHALL BE CONSTRUCTED TO ACCOMODATE SIDEWALKS. (EXISTING AND FUTURE)
5. OMIT 1 1/2" EDGE AT GUTTER IF DRIVE APPROACH ALSO SERVES AS ACCESSIBLE SIDEWALK RAMP.
6. DRIVEWAY MAY BE REINFORCED AT OWNERS OPTION. DO NOT REINFORCE ON CITY BID PROJECTS.
7. SIDEWALK CROSS SLOPE SHALL NOT EXCEED 2.00%.

Approved	6/01/16 Date	City of Columbia Public Works Department	DRIVEWAY AND ALLEY (Downtown)	1000.05
Revisions				

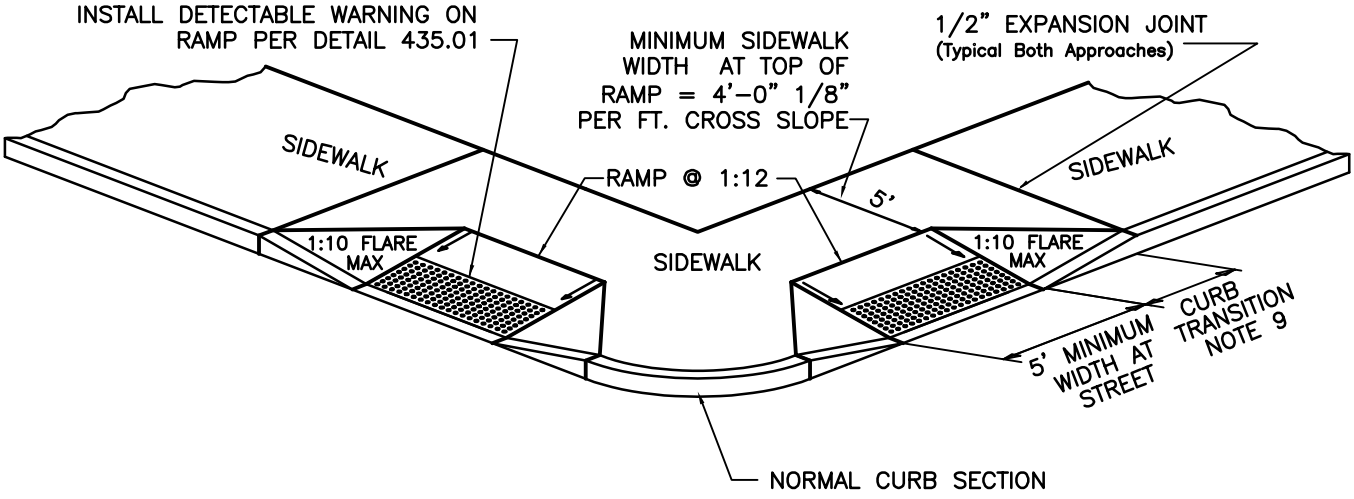

NOTE:

1. RAMP, LANDING AND AREA BETWEEN RAMPS SHALL BE 6" THICK REINFORCED W/ #4 @ 12" O.C. MoDOT PAVEMENT CONCRETE.
2. SEE DETAIL 1000.03 FOR JOINT DETAILS.
3. MAXIMUM RAMP CROSS SLOPE IS 2.00%.
4. ALL SLOPES ARE MEASURED FROM THE HORIZONTAL.
5. RAMP LENGTH IS DEPENDENT ON 1:12 MAX. SLOPE. USE FLATTER WHEN POSSIBLE.
6. LANDING AREA AT TOP OF RAMP SHALL BE 5'-0" MIN WIDTH, CROSS SLOPE OF LANDING SHALL NOT EXCEED 2.00%.
7. TYPE "A" RAMP NOT APPLICABLE IF SIDEWALK WIDTH DOES NOT PROVIDE 5'-0" LANDING AT THE TOP OF RAMP. USE TYPE "B" RAMP.
8. RAMP EXTENDS INTO SIDEWALK, FLARE SLOPE MUST NOT EXCEED 1:10.
9. CURB TRANSITION LENGTH IS DEPENDENT ON 1:10 FLARE SLOPE

Approved	6/01/16 Date	City of Columbia Public Works Department	SIDEWALK RAMP Sidewalk at Back of Curb (Type A)	1000.06
Revisions				

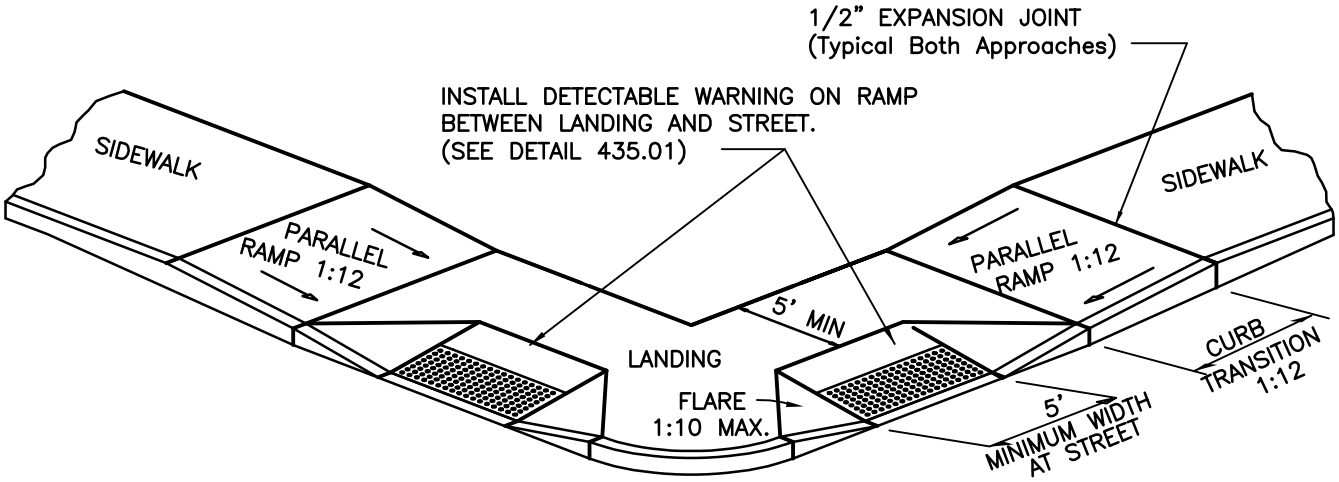

NOTE:

1. RAMP, LANDING AND AREA IN BETWEEN SHALL BE 6" THICK REINFORCED W/#4@12" O.C. MoDOT PAVEMENT CONCRETE.
2. EXPANSION JOINT SHALL BE 1/2" PREFORMED CORK OR BITUMINOUS EXPANSION JOINT MATERIAL.
3. MAXIMUM RAMP CROSS SLOPE IS 2.00%.
4. ALL SLOPES ARE MEASURED FROM THE HORIZONTAL.
5. RAMP SLOPE 1:12 MAX. USE FLATTER WHEN POSSIBLE.
6. LANDING AREA SHALL BE 5'–0" MIN WIDTH, CROSS SLOPE OF LANDING SHALL NOT EXCEED 2.00%.
7. TYPE "B" RAMP PROVIDES PARALLEL RAMPS TO REDUCE THE PERPENDICULAR RAMP LENGTH AND PROVIDE ADEQUATE LANDING.
8. RAMP EXTENDS INTO SIDEWALK, FLARE SLOPE MUST NOT EXCEED 1:10.

Approved	6/01/16 Date	City of Columbia Public Works Department	SIDEWALK RAMP Sidewalk at Back of Curb (Type B)	1000.07
Revisions				

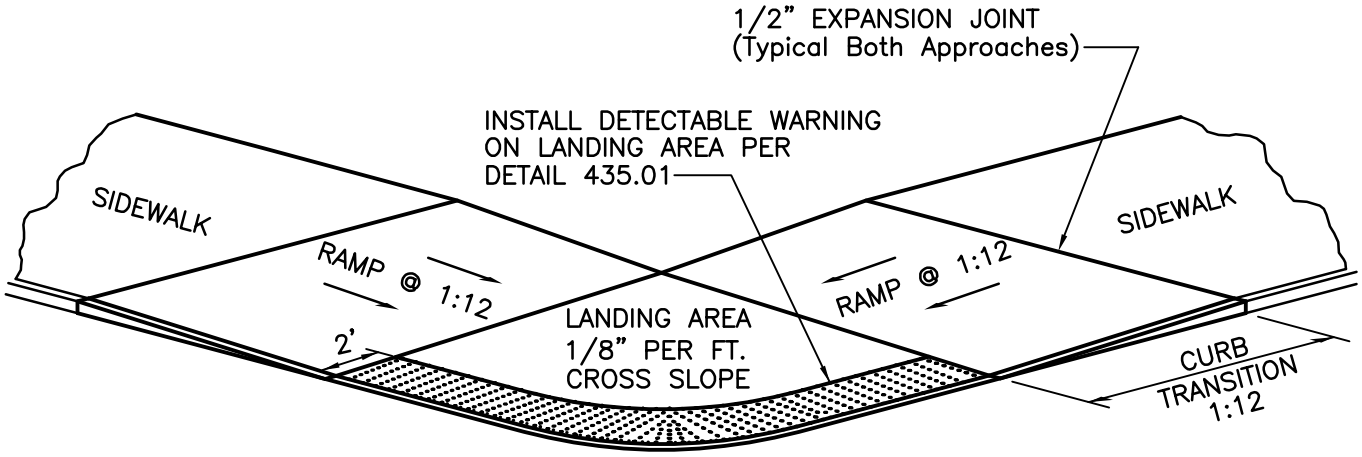

NOTE:

1. RAMP AND LANDING SHALL BE 6" THICK REINFORCED W/#4@12" O.C. MoDOT PAVEMENT CONCRETE.
2. EXPANSION JOINT SHALL BE 1/2" PREFORMED CORK OR BITUMINOUS EXPANSION JOINT MATERIAL.
3. MAXIMUM RAMP CROSS SLOPE IS 2.00%.
4. ALL SLOPES ARE MEASURED FROM THE HORIZONTAL.
5. RAMP LENGTH IS DEPENDENT ON 1:12 MAX. SLOPE. USE FLATTER WHEN POSSIBLE.
6. LANDING AREA SHALL BE 5'-0" MIN WIDTH, CROSS SLOPE OF LANDING SHALL NOT EXCEED 2.00%.
7. USE TYPE "C" RAMP ONLY IF TYPE "A" & "B" ARE NOT FEASIBLE.

Approved	6/01/16 Date	City of Columbia Public Works Department	SIDEWALK RAMP Sidewalk at Back of Curb (Type C)	1000.08
Revisions				

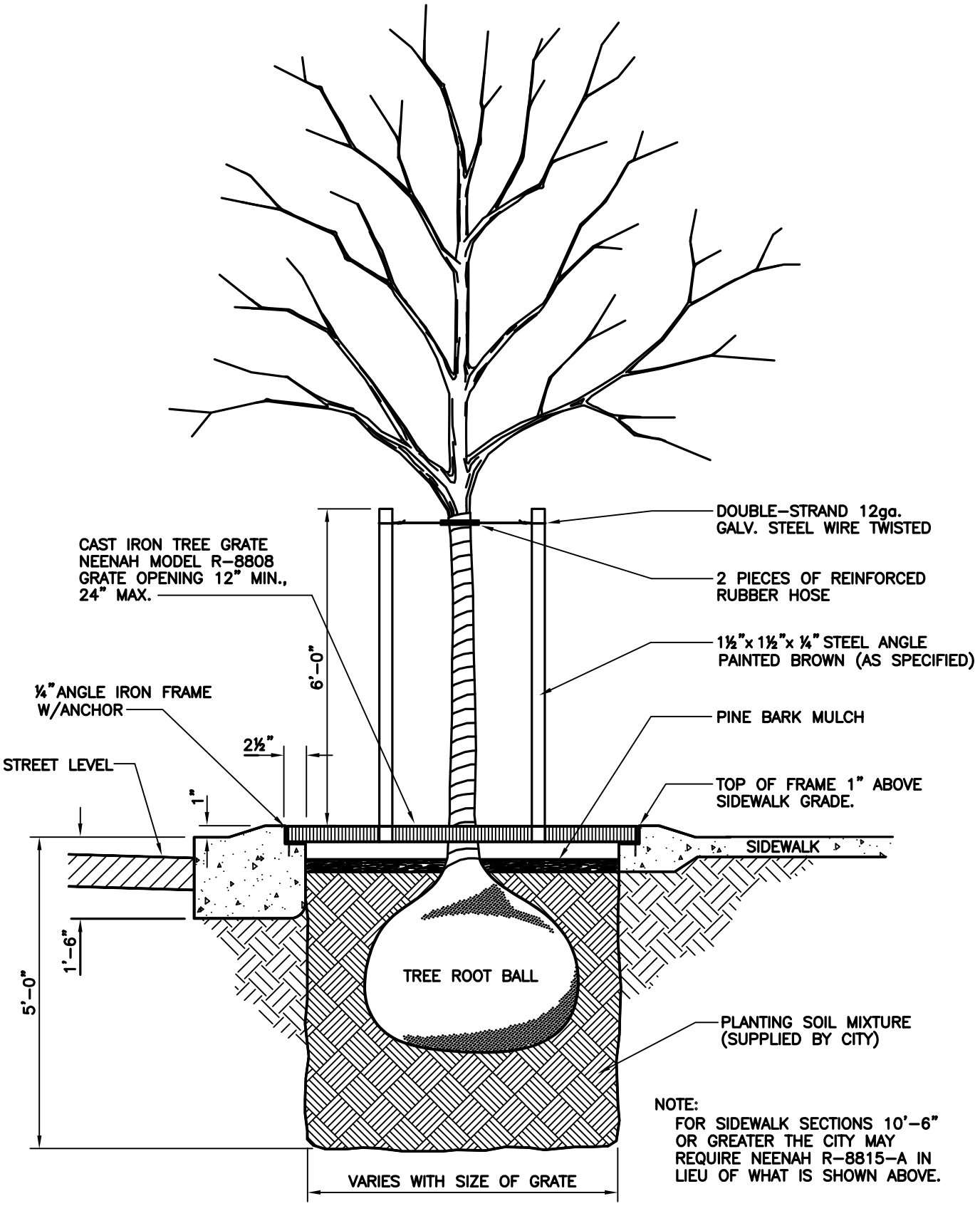

NOTE:
FOR SIDEWALK SECTIONS 10'–6" OR GREATER THE CITY MAY REQUIRE NEENAH R–8815–A IN LIEU OF WHAT IS SHOWN ABOVE.

Approved	6/01/16 Date	City of Columbia Public Works Department	TYPICAL DOWNTOWN TREE PLANTING DETAIL	1000.09
Revisions				

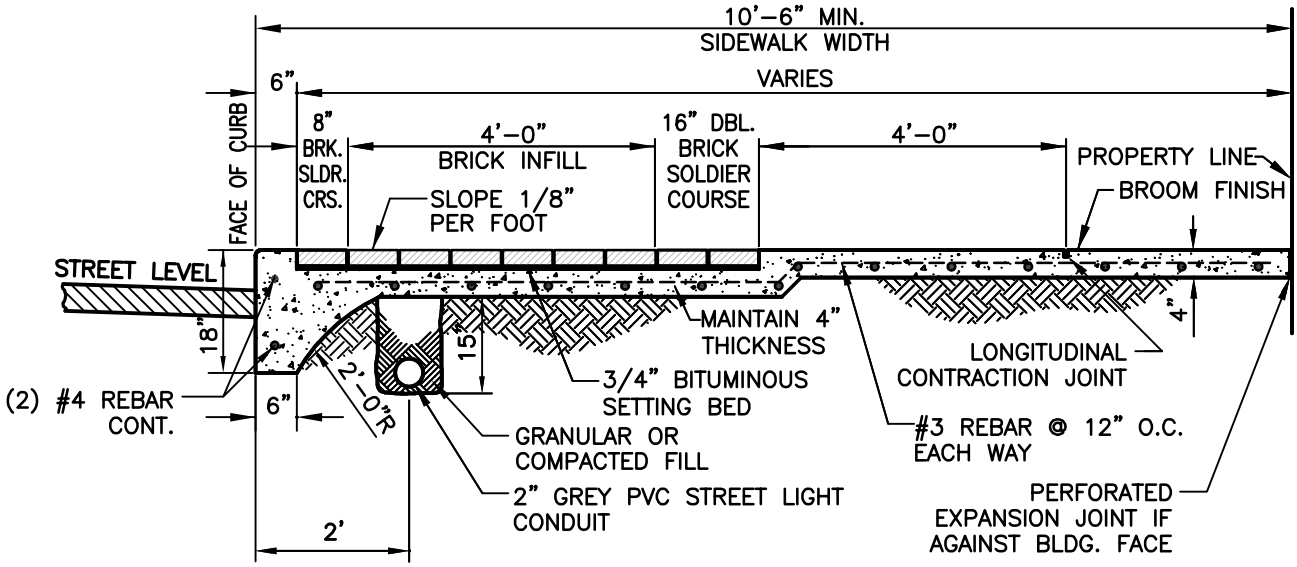

TYPICAL SECTION

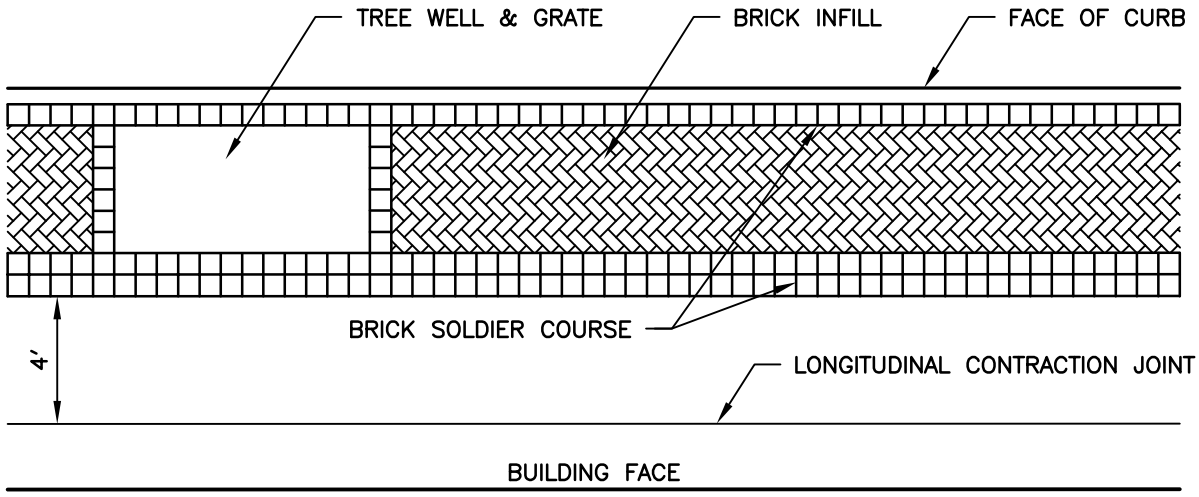

PLAN VIEW

NOTES:

1. SIDEWALK CROSS SLOPE SHALL NOT EXCEED 2.00% NOR BE LESS THAN 0.50%.
2. SAW AND PATCH STREET PAVEMENT AS NECESSARY FOR CONSTRUCTION OF NEW CURB.
3. SEE JOINT DETAILS – 1000.03.
4. SEE SPECIFICATIONS – 1000.01
5. NO STEEL TO BE PLACED THROUGH EXPANSION JOINT
6. FOR SIDEWALK SECTIONS LESS THAN 10'-6" A MODIFIED DETAIL WILL BE REQUIRED.

Approved 6/01/16 Date	City of Columbia Public Works Department	DOWNTOWN SIDEWALK - ALONG 8th STREET & BROADWAY	1000.10A
Revisions			

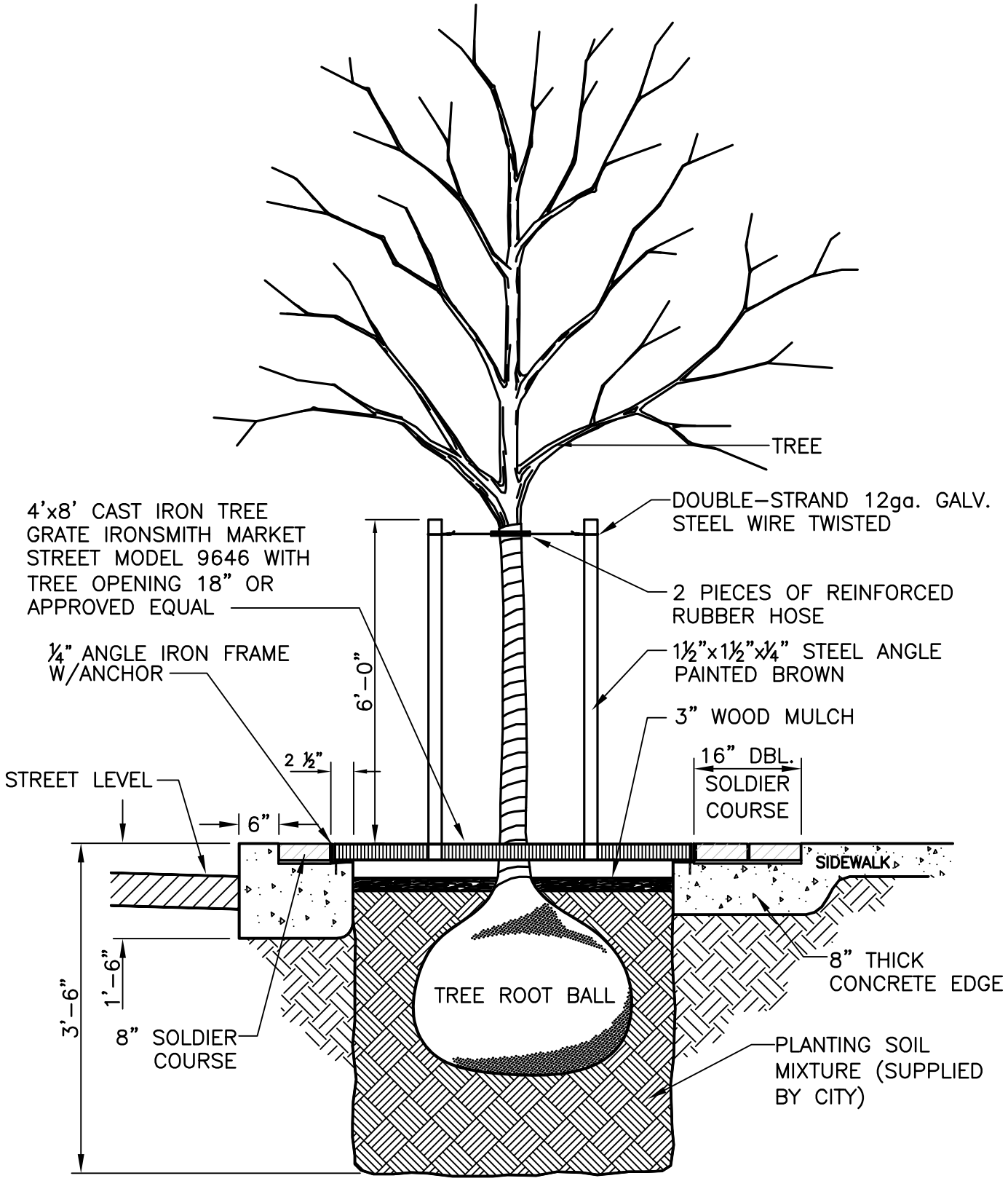

Approved	6/01/16 Date	City of Columbia Public Works Department	DOWNTOWN SIDEWALK - ALONG 8th STREET & BROADWAY	1000.10B
Revisions				

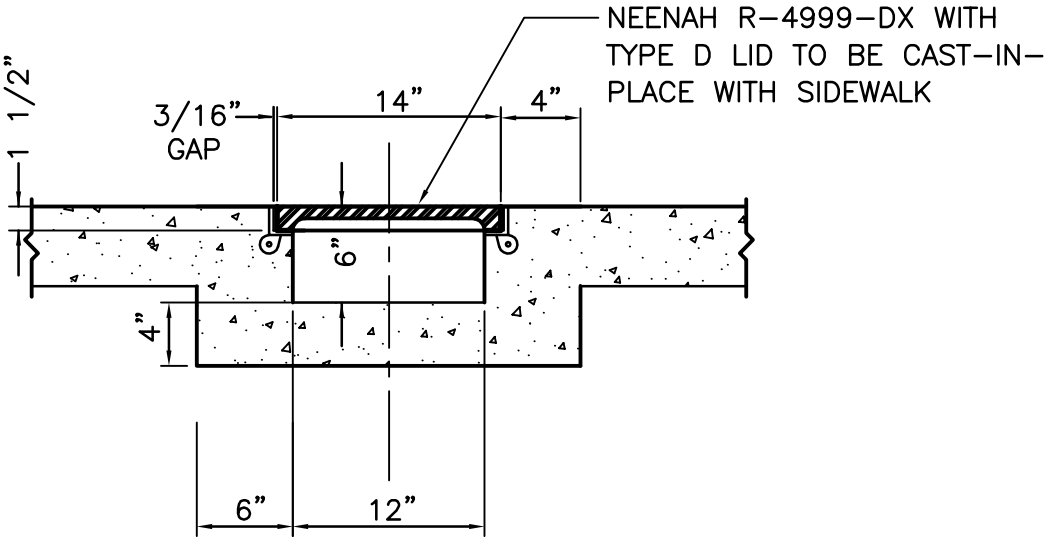

NOTE:

1. TRENCH GRATE CUT (IF NEEDED) SHALL BE LOCATED AT PROPERTY LINE.

Approved	6/01/16 Date	City of Columbia Public Works Department	TRENCH GRATE	1000.16
Revisions				