NOTE:
THRUST BLOCKING REQUIRED AT FORCE MAIN TERMINATION

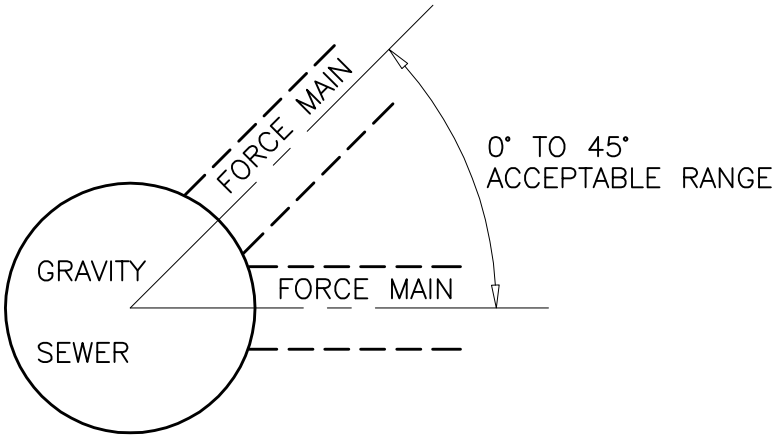

SECTION A–A

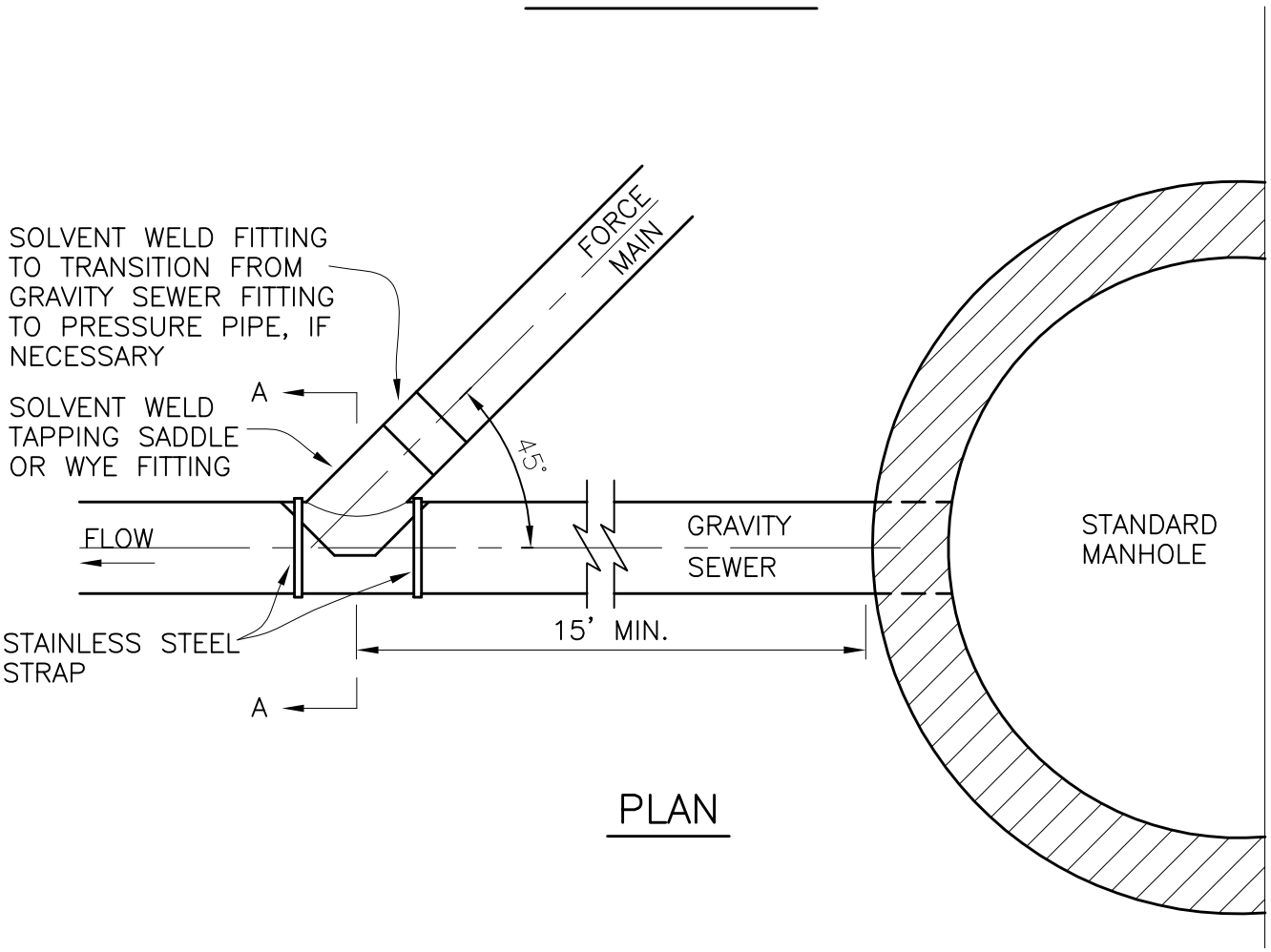

PLAN

GM Approved	5/02/01 Date	City of Columbia Public Works Department	FORCE MAIN TERMINATION	04
Revisions				