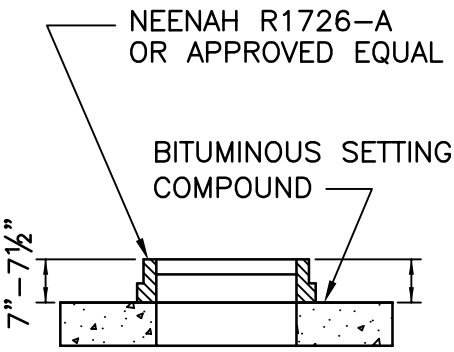

ALTERNATE TOP

(MUST BE USED UNDER PAVEMENTS ONLY)

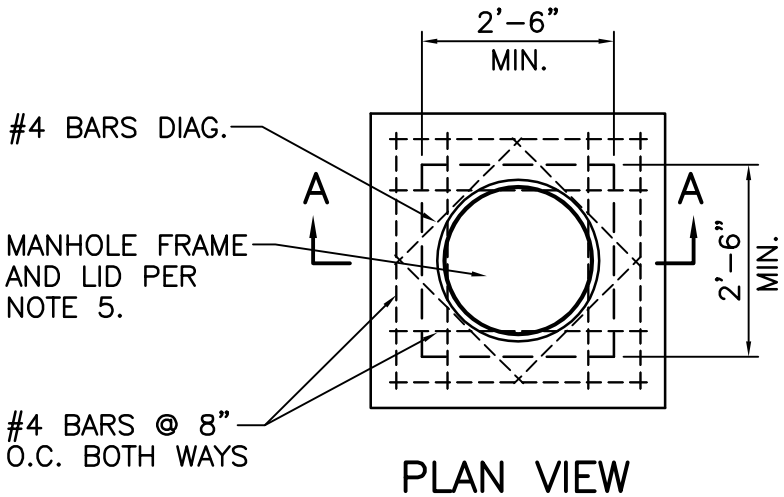

PLAN VIEW

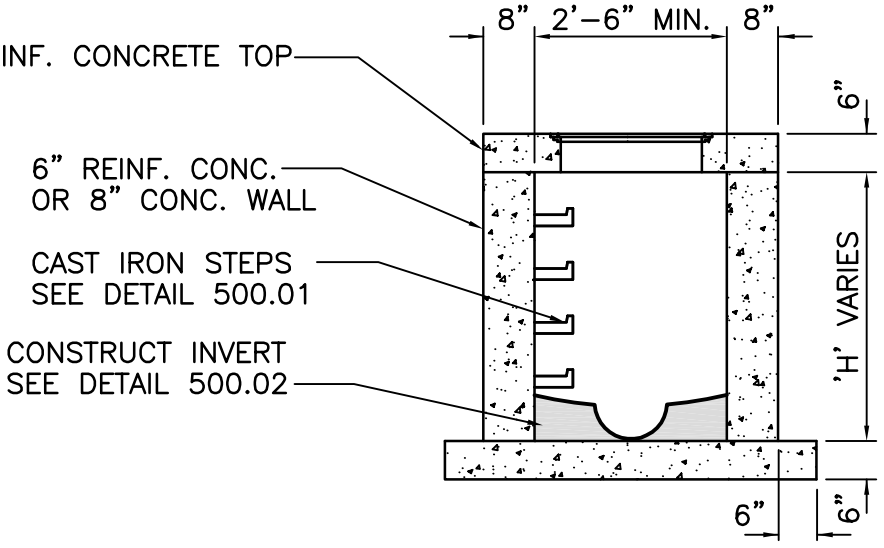

SECTION A–A

(Showing Standard Flush Top)

NOTES:

1. CONCRETE SHALL BE CLASS E FOR BASES AND D FOR WALLS AND TOP.
2. REINFORCING STEEL SHALL BE GRADE 60
3. INSTALL WEEP HOLES AS PER DETAIL 500.04
4. STRUCTURES WHERE H>8' SHALL BE REINFORCED CONCRETE (#4 BARS AT 12" CTRS, BOTH WAYS AND #4 BARS DIAGONAL AT PIPE OPENINGS)
5. FRAME AND LID SHALL BE NEENAH R–1960–A (TYPE C LID) OR APPROVED EQUAL. SEE DETAIL 500.01 FOR PLACEMENT.

JDG 1/1/12 Approved Date	City of Columbia Public Works Department	JUNCTION BOX	510.01
Revisions			