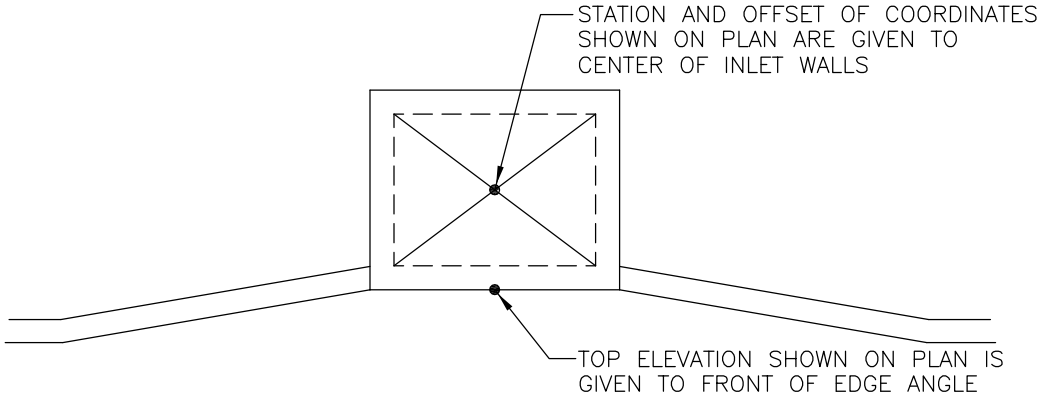

INLET PLAN INFORMATION

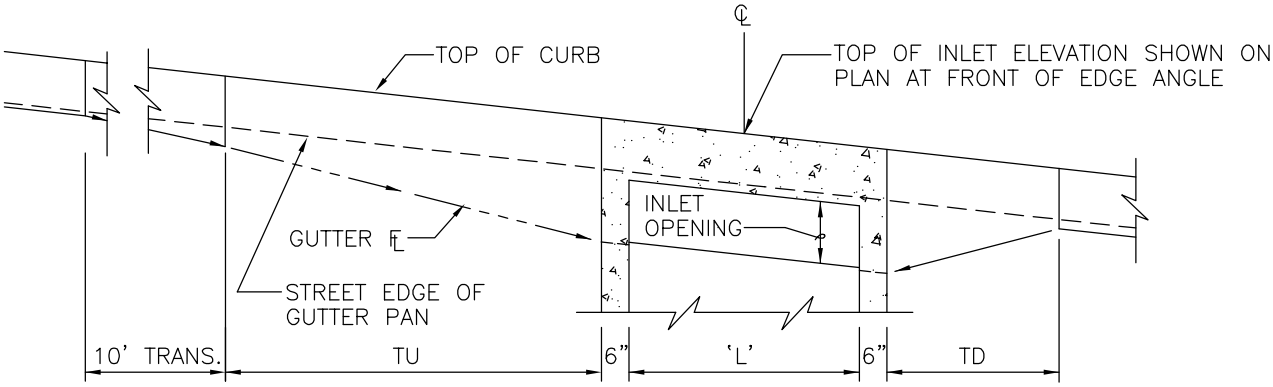

ON SLOPE

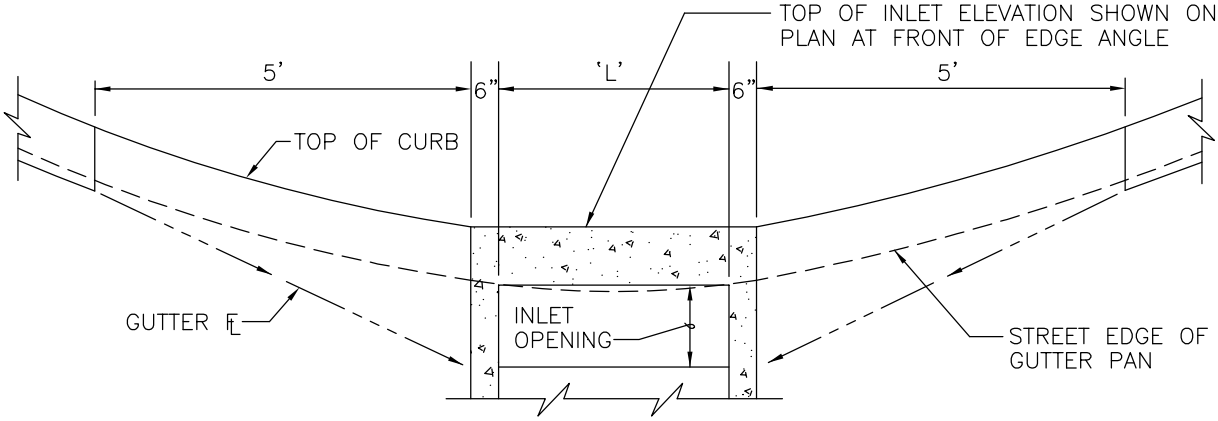

AT LOW POINT

INLET SETTING DIAGRAMS

JDG Approved	1/1/12 Date	City of Columbia Public Works Department	TYPE M INLET SETTING DIAGRAM	505.01D
Revisions				