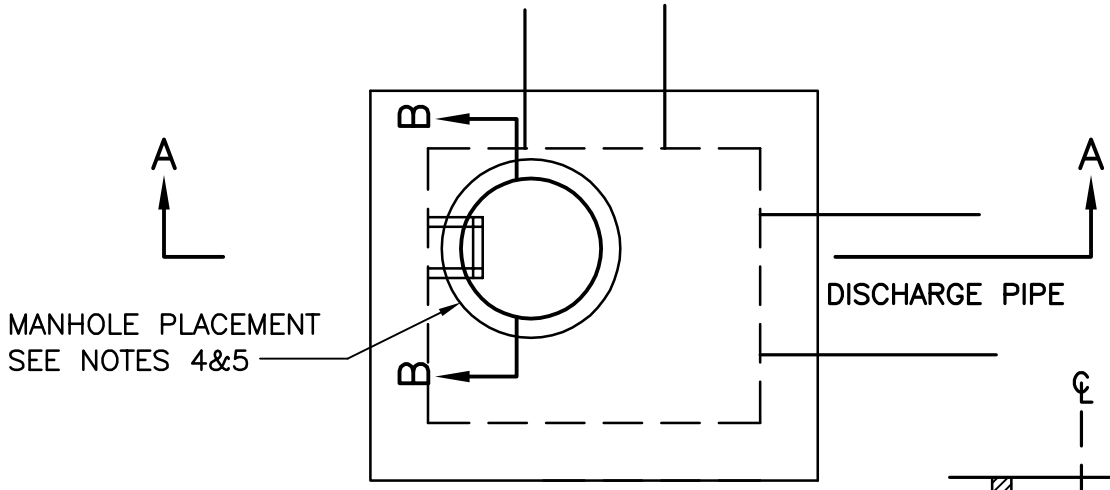

PLAN VIEW

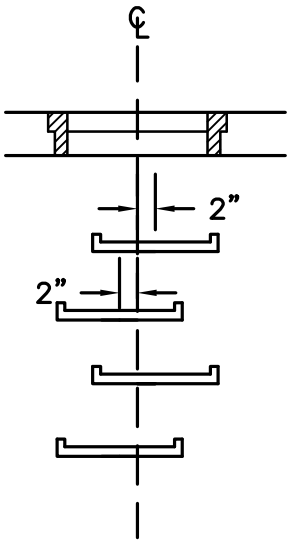

SECTION B–B

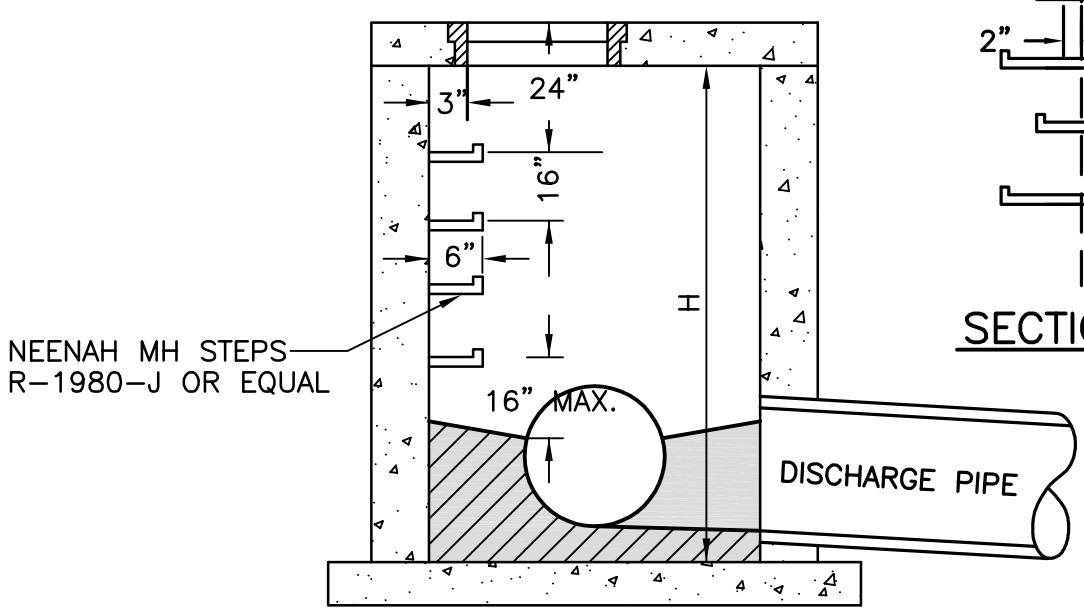

SECTION A–A

NOTES:

1. STEPS NOT REQUIRED WHERE H IS LESS THAN 4'.
2. CAST IRON STEPS STEPS SHALL BE NEENAH R–1980–J OR EQUAL
3. STEPS SHALL BE PLACED ON VACANT WALL WHEN POSSIBLE
4. MANHOLE RING SHALL BE OFFSET TOWARD WALL WITH STEPS.
5. MANHOLE RING SHALL BE CENTERED ON CENTERLINE OF STEPS
6. STAGGER STEPS 2" EACH WAY FROM CENTERLINE OF MANHOLE RING.
7. TOP STEP 24" BELOW TOP OF SLAB
8. STEP SPACING TO BE 16", BOTTOM STEP TO BE NO HIGHER THAN 16" FROM INVERT.

JDG 1/1/12 Approved Date	City of Columbia Public Works Department	DRAINAGE STRUCTURE STEPS	500.01
Revisions			