City of Columbia

701 East Broadway, Columbia, Missouri 65201

Agenda Item Number: Supplemental Information B 287-15
Department Source: Public Works
To: City Council
From: City Manager & Staff
Council Meeting Date: 10/19/2015
Re: Supplemental Council Memo for Waterline Replacement along Rangeline Road as Part of the Runway 13/31 Extension Project at the Columbia Regional Airport

Documents Included With This Agenda Item

Supplemental Council Memo, Exhibits to Resolution/Ordinance, Amendment Sheet
Supporting documentation includes: None

Executive Summary

A waterline replacement contract with Consolidated Public Water Supply District No. 1 (CPWSD #1) of Boone County, Missouri relating to the Rangeline Road relocation project at the Columbia Regional Airport, was placed on the October 5, 2015 Council agenda for introduction and first reading. An amendment sheet has been prepared for this legislation adding an Exhibit "D" (Water Line Easement) to the contract, and to include missing documentation for Exhibit "B" (2013 water distribution specifications).

Discussion

Council Bill 287-15, authorizing a waterline replacement contract with CPWSD #1, relating to the relocation of a portion of Rangeline Road as part of the Runway 13/31 extension project at Columbia Regional Airport, was introduced at the October 5, 2015 Council meeting. It was brought to the attention of staff that some of the documentation was missing from Exhibit "B" (2013 water distribution specifications) and that an Exhibit "D" (Water Line Easement) had inadvertently been omitted from the contract. An amendment sheet has been prepared to correct these issues.

Fiscal Impact

Short-Term Impact: The waterline contract with CPWSD #1 is for a not to exceed amount of $10,000 and is eligible for a 90% FAA grant reimbursement.
Long-Term Impact: None

Vision, Strategic & Comprehensive Plan Impact

Vision Impact: Economic Development, Transportation
Strategic Plan Impact: Infrastructure...Connecting the Community
Comprehensive Plan Impact: Infrastructure, Economic Development

City of Columbia

701 East Broadway, Columbia, Missouri 65201

Suggested Council Action

Authorize the City Manager to execute a waterline replacement contract with Consolidated Public Water Supply District No. 1 related to the Rangeline Road relocation project.

Legislative History

10/05/15 (287-15) Authorizing a waterline replacement contract with Consolidated Public Water Supply District No. 1 of Boone County for the Rangeline Road relocation as part of the Runway 13/31 Extension Project at Columbia Regional Airport

10/05/15 (B278-15) Authorizing a waterline easement to Consolidated Public Water Supply District No. 1 for the relocation of Rangeline Road as part of the Runway 13/31 Extension project.

06/01/15 (Ord 22454) Authorizing a bid call through Purchasing, and appropriating funds for the realignment and reconstruction of a portion of Rangeline Road as it relates to Runway 13/31 improvements

05/04/15 (R75-15) Setting a public hearing for June 1, 2015 for the realignment and reconstruction of a portion of Rangeline Road as it relates to Runway 13/31 improvements

10/20/14 (R199-14) Authorizing an engineering services agreement with Burns & McDonnell for design services for relocation and reconstruction of a portion of Rangeline Road Adjacent to COU.

07/02/14 (Ord 22119) Appropriating FAA grant funds for costs relating to the design and relocation of Rangeline Road as part of the reconstruction and realignment of Runway 13-31 and Taxiway B.

Department Approved

City Manager Approved

City of Columbia

701 East Broadway, Columbia, Missouri 65201

Agenda Item Number: B 287-15
Department Source: Public Works
To: City Council
From: City Manager & Staff
Council Meeting Date: 10/5/2015
Re: Waterline Replacement along Rangeline Road as Part of the Runway 13/31 Extension Project at the Columbia Regional Airport

Documents Included With This Agenda Item

Council memo, Resolution/Ordinance, Exhibits to Resolution/Ordinance
Supporting documentation includes: None

Executive Summary

Authorizing the City Manager to execute a waterline replacement contract with Consolidated Public Water Supply District No. 1 of Boone County, Missouri relating to the Rangeline Road relocation as part of the Runway 13/31 Extension Project at Columbia Regional Airport.

Discussion

As part of the Runway 13/31 Extension project at the Columbia Regional Airport, it is necessary to realign a portion of Rangeline Road. As a result of the realignment, Consolidated Public Water Supply District #1 (CPWSD #1) will need to relocate an existing 3" waterline. The waterline replacement contract with CPWSD #1 is for a not to exceed amount of $10,000 to cover expenses including fees for engineering, attorney, inspection and any other reasonable costs incurred. All expenses will be paid from the Rangeline Road Relocation project and are eligible for a 90% FAA grant reimbursement.

Fiscal Impact

Short-Term Impact: The waterline contract with CPWSD #1 is for a not to exceed amount of $10,000 and is eligible for a 90% FAA grant reimbursement.
Long-Term Impact: None

Vision, Strategic & Comprehensive Plan Impact

Vision Impact: Economic Development, Transportation
Strategic Plan Impact: Infrastructure...Connecting the Community
Comprehensive Plan Impact: Infrastructure, Economic Development

Suggested Council Action

Authorize the City Manager to execute a waterline replacement contract with Consolidated Public Water Supply District No. 1 related to the Rangeline Road relocation project.

City of Columbia

701 East Broadway, Columbia, Missouri 65201

Legislative History

10/05/15 (B278-15) Authorizing a waterline easement to Consolidated Public Water Supply District No. 1 for the relocation of Rangeline Road as part of the Runway 13/31 Extension project.
06/01/15 (Ord 22454) Authorizing a bid call through Purchasing, and appropriating funds for the realignment and reconstruction of a portion of Rangeline Road as it relates to Runway 13/31 improvements
05/04/15 (R75-15) Setting a public hearing for June 1, 2015 for the realignment and reconstruction of a portion of Rangeline Road as it relates to Runway 13/31 improvements
10/20/14 (R199-14) Authorizing an engineering services agreement with Burns & McDonnell for design services for relocation and reconstruction of a portion of Rangeline Road Adjacent to COU.
07/02/14 (Ord 22119) Appropriating FAA grant funds for costs relating to the design and relocation of Rangeline Road as part of the reconstruction and realignment of Runway 13-31 and Taxiway B.

Department Approved

City Manager Approved

Council Bill: ___B 287-15___

MOTION TO AMEND: _____

MADE BY: _____

SECONDED BY: _____

MOTION: I move that Council Bill ____B 287-15___ be amended as set forth on this amendment sheet.

==========

Exhibit A attached to this amendment sheet is substituted for the Exhibit A attached to the original ordinance.

WATERLINE REPLACEMENT CONTRACT
(Relocation of Rangeline Road @ Columbia Regional Airport)

THIS CONTRACT, made and entered into this _____ day of _____, 2015, by and between the CITY OF COLUMBIA, MISSOURI, a municipal corporation, hereinafter called "CITY," and CONSOLIDATED PUBLIC WATER SUPPLY DISTRICT NO. 1 OF BOONE COUNTY, MISSOURI, a Missouri public corporation, hereinafter called "DISTRICT:"

W I T N E S S E T H:

WHEREAS, the CITY has prepared plans for Road Improvements to be made in the Rangeline Road right-of-way (herein "Road Improvements"); and

WHEREAS, in connection with the aforesaid Road Improvements the parties desire to agree to the provisions contained herein in regard to replacing, relocating and abandoning portions of the existing waterlines of the DISTRICT.

NOW, THEREFORE, in consideration of the respective covenants of the parties and other valuable consideration, the receipt and sufficiency of which are hereby acknowledged, the undersigned do hereby mutually agree as follows:

1. REPLACEMENT: That in connection with making the aforesaid Road Improvements the CITY shall at CITY'S expense perform the following work:

a) Install a new three inch (3") waterline commencing at STA. 3+09 of Rangeline Road Relocation Plans and extending to STA. 55+00 connecting to the existing DISTRICT waterline at or near STA. 55+00 and PT STA. 151+52 17;

The aforesaid work shall be performed in accordance with the plans attached hereto as Exhibit "A" and in accordance with the specifications attached hereto as Exhibit "B."

2. EASEMENTS: That before commencing the aforesaid work, CITY shall procure execution of the original copy of the Easement for Utility Purposes attached hereto as Exhibit "C" and record the same in the office of the Recorder of Deeds of Boone County, Missouri. CITY agrees that it will not execute any document terminating or amending the aforesaid easement before the work

specified herein has been completed without the prior written consent of DISTRICT. CITY shall execute and deliver to DISTRICT the original copy of the Waterline Easement attached hereto as Exhibit "D" and made a part hereof.

3. INSPECTION: CITY agrees to give to DISTRICT not less than seventy-two (72) hours prior written notice of CITY'S intention to perform work in replacing the aforesaid waterlines and DISTRICT shall have the right to have a representative present to inspect the replacement work as the same is being done.

4. DISTRICT COST: That the CITY shall pay to DISTRICT all engineering fees, attorney fees and other reasonable costs and expenses incurred by DISTRICT in connection with the matters referred to herein and CITY shall pay said amount to DISTRICT upon being furnished with an itemized list of said costs and expenses, the total amount of said costs and expenses shall not exceed the sum of $10,000.00.

5. WATER SERVICE DISRUPTION: CITY agrees that in performing the aforesaid work CITY will perform said work in such a manner as to minimize the disruption of water service to the customers of the DISTRICT.

6. WATERLINE TESTING: DISTRICT will furnish water to the aforesaid waterlines in connection with flushing and testing said waterlines in accordance with the rules and regulations of the Missouri Department of Natural Resources.

7. OWNERSHIP: That upon completion of the aforesaid work in accordance with the provisions contained herein the aforesaid replaced waterlines shall be deemed transferred to and become the waterlines of the DISTRICT.

8. CORRECTIVE WORK: CITY shall promptly give DISTRICT written notice of when the Rangeline Road project has been completed. CITY shall repair or replace at CITY'S expense any defective work or materials installed under this Contract which arise or become apparent within one (1) year after the completion of the aforesaid Road Improvements and in addition CITY shall perform such backfilling work, erosion control work and cleanup work which the DISTRICT determines is needed within one (1) year after the Road Improvements have been completed. CITY agrees to indemnify and hold DISTRICT harmless from any loss or damage arising out of or resulting from the failure of the CITY to perform when due its obligations under

this paragraph provided that DISTRICT notifies CITY of such loss or damage within one (1) year of completion of the Rangeline Road project.

9. ENFORCEMENT IN EQUITY: It is agreed that in the event of any controversy concerning the rights or obligations of the parties hereto under this contract, such rights or obligations may be enforceable in law or in equity, or both; provided however, such remedies shall be cumulative and not exclusive, and shall be in addition to any other remedies which the parties may have.

10. LITIGATION EXPENSES: In the event of any litigation between the parties in regard to the provisions of this contract, the prevailing party in said litigation shall have the right to recover from the other party all reasonable litigation expenses including a reasonable attorney fee.

11. JURISDICTION AND VENUE: The jurisdiction and venue of any dispute under the terms of this contract shall be in the Circuit Court of Boone County, Missouri.

12. SUCCESSORS AND ASSIGNS: This contract shall be binding upon the parties hereto and their successors and assigns.

IN WITNESS WHEREOF, the parties have hereunto executed this contract the day and year first above written.

CITY:

CITY OF COLUMBIA, MISSOURI

BY: _____
MIKE MATTHES, City Manager

ATTEST:

_____
SHEELA AMIN, City Clerk

APPROVED AS TO FORM:

_____
NANCY THOMPSON, City Counselor

I hereby certify that the above expenditure is within the purpose of the appropriation to which it is charged, Account No.554-6288-881.49-90, C44090, and that there is an unencumbered balance to the credit of such appropriation sufficient to pay therefor.

_____

John Blattel, Finance Director

DISTRICT:

CONSOLIDATED PUBLIC WATER SUPPLY DISTRICT NO. 1 OF BOONE COUNTY, MISSOURI

BY: _____
JEROME GLASCOCK, President

ATTEST:

_____
JANET SEARS, Clerk

STATE OF MISSOURI)
) SS.
COUNTY OF BOONE)

On this _____ day of _____, 2015, before me appeared MIKE MATTHES, to be personally known, who, being by me duly sworn, did say that he is the City Manager of the City of Columbia, Missouri, and that the seal affixed to the foregoing instrument is the corporate seal of the City and that this instrument was signed and sealed on behalf of the City by authority of its City Council and the City Manager acknowledged this instrument to be the free act and deed of the City.

IN TESTIMONY WHEREOF, I have hereunto set my hand and affixed my official seal, at my office in Columbia, Missouri, the day and year first above written.

My commission expires:

_____

_____
Notary Public

STATE OF MISSOURI)
) SS.
COUNTY OF BOONE)

On this 8th day of October, 2015, before me appeared JEROME GLASCOCK, to me personally known, who, being by me duly sworn, did say that he is the President of CONSOLIDATED PUBLIC WATER SUPPLY DISTRICT NO. 1 OF BOONE COUNTY, MISSOURI, a Missouri public corporation, and that the seal affixed to the foregoing instrument is the corporate seal of said corporation and that said instrument was signed and sealed in behalf of said corporation by authority of its Board of Directors and the said President acknowledged said instrument to be the free act and deed of said corporation.

IN TESTIMONY WHEREOF, I have hereunto set my hand and affixed my official seal, at my office in Columbia, Missouri, the day and year first above written.

My commission expires:
3-21-2018

Notary Public

NOTARY PUBLIC NOTARY SEAL STATE OF MISSOURI

CHAD HENRY
My Commission Expires
March 21, 2018
Boone County
Commission #14397914

EXHIBIT "A"

FINAL PLANS (100%)

City of Columbia, Missouri

Department of Public Works

RANGELINE ROAD

RELOCATION OF RANGELINE ROAD AT COLUMBIA REGIONAL AIRPORT

RFQ: 119/2015

AIP NO. 3-29-0022-37/41

BMCD PROJ. NO. 81847

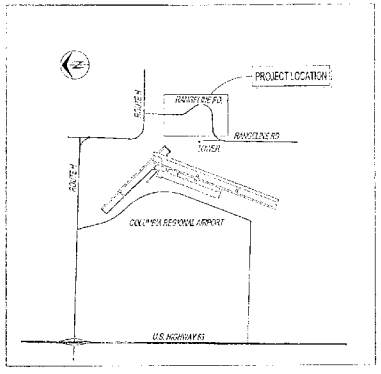

LOCATION MAP
(NOT TO SCALE)

GENERAL NOTES

1. All road construction to be in accordance with "Boone County Construction & Material Specifications and Standards" (Current edition) and the Project Special Provisions.
2. Known underground utilities are shown in their approximate locations. Other utilities may exist.
3. All removal of driveway pavements should be verified by field engineer.
4. All excavation to be in accordance with specifications. Such compliance shall not, however, exclude any person making any excavation from doing so in a careful and prudent manner, nor shall it excuse such person from liability for any damage or injury to or properties of life resulting from the excavation.
5. All HCP is Class III unless otherwise indicated.
6. All disturbed earth areas shall be restored as per the specifications.
7. Remove all pavement surfaces, inlets, pipes and sidewalks within the construction limits as per the specifications except those noted to remain. The field inspector shall verify removal of all driveway pavement.
8. Removal of trees and bushes shall be verified by field inspectors. Exercise caution when working near the construction limits to minimize disturbance to adjacent trees and shrubs that are not being removed by construction activities.
9. No open trenches will be allowed overnight outside of the "fence closed" area. Asphaltic "cold mix" shall be used as a temporary patch overnight. Temporary patching shall be considered incidental to the work.

TRAVERSE POINTS:

Item	Northing	Easting	Elevation	Description
CP7	1038681.29	1723369.03	896.39	Iron
CP8	1038705.76	1723380.15	893.75	Iron
CP11	1038702.85	1723419.57	894.03	Iron
CP12	1039825.55	1722394.49	877.23	Iron
CP13	1039429.44	1722713.92	883.74	Iron
CP14	1039284.44	1722915.39	883.04	Iron
CP15	1038962.49	1722057.63	875.97	Iron
CP17	1037100.74	1722879.15	873.61	Iron
CP19	1036803.76	1722491.16	872.37	Iron
CP21	1036 13.23	1722456.87	861.74	Iron

BENCHMARKS:

EL: 894.67 BM – USGS STAINLESS STEEL ROD IN SLEEVE WITH CAP MARKED "USGS 8" NAD83 (94) LOCATED 100 FEET SOUTHEAST OF THE SOUTH EAST CORNER OF TAXI WAY A, 160 FEET SOUTH OF THE EAST EDGE OF TAXIWAY A AND 127 FEET NORTH OF THE SOUTH EDGE OF RUNWAY 2-20.

EL: 896.24 TBM – ROD SPIKE ON SOUTH SIDE OF UTILITY POLE LOCATED 30 FEET NORTHWEST OF THE INTERSECTION OF NORTH 'A' AND RANGELINE ROAD.

EL: 892.40 TBM – ROD SPIKE ON SOUTH SIDE OF UTILITY POLE LOCATED 50 FEET NORTHWEST OF THE INTERSECTION OF RANGELINE ROAD AND ASPHALT TAXIWAY CONTROL TOWER.

DESIGN DATA:

Design Speed	30mph(km/h)
Functional Classification	Local
Construction Beginning Station	14+90.90
Construction Ending Station	34+66.22
Project Length	3,275.42 LF

CONSOLIDATED PUBLIC WATER DISTRICT NO. 1 GENERAL CONSTRUCTION NOTES

General

1. No work shall be started without notifying CPWD District No. 1 at least 72 hours in advance at (573) 449-8723.
2. Contractor shall obtain a Boone County permit from public works, where required.
3. District will obtain a MoDOT permit, where req'd. Any other permits are contractor's responsibility.
4. Contractor is responsible to have all utilities within project area located in the field prior to construction. Contact Missouri One Call system at 1-800-DIG-RITE or 811.
5. Water line alignment to be staked by contractor. Variance from approved alignment must be approved by water district prior to installation.

Installation

6. Minimum cover on water line shall be 48", unless otherwise noted.
7. Locate wire shall be installed on all pipe including service crossings. Two strands of locator wire shall be installed on highway crossings and creek crossings.
8. Minimum 12" of horizontal and 18" of vertical separation between water lines and non potable lines.
9. Contractor to confirm all service crossings, as required.
10. Concrete thrust blocking forms to be approved by district inspector before pouring blocking. Concrete blocks or aggregate sand fill be allowed.
11. All lines to be pigged, disinfected and pressure tested prior to connecting to existing main. Temporary thrusts, blow valves, etc. will be the contractor's responsibility for installation and removal, as necessary.
12. Trench backfill under private road crossings shall be 1" clean rock. Trench backfill for private entrances and county roads shall be 1" compacted surface rock.
13. Tie-ins or wet tap tie-ins shall be made only after contractor or individual has coordinated and acquired prior approval from CPWD Boone No. 1 as to:
a) Actual time of day service will be disrupted.
b) Method of tie-in and material have been approved by district inspector.
c) All materials needed for tie-in on site and assembled as far as possible.
d) No tie-ins to be scheduled on holiday, district pool holidays or weekends.
14. Contractor to clean-up, seed and mulch as per project specifications.
15. Fittings to be mechanical joint ductile iron. Bend fittings greater than 5° will not be allowed.
16. All pipes with open ends indicated for abandonment shall be capped.
17. Valves to be abandoned will remove the riser to at least 12" below the ground. The lid will be given to the water district.
18. Tees with anchor couplings may be used in lieu of anchor tees shown on the plans.
19. Use of 3/4" rod-thread stainless steel tie-back rods may be approved by the district inspector in place of 3/4" anchor couplings.

UTILITY COMPANIES:

TELEPHONE
Centurytel
815 Cherry Street
Columbia, MO 65205
573-882-2506

WATER
Consolidated Public Water District
Boone County District
No.1 (CPWD NO. 1)
1500 N. Seventh Street
Columbia, MO 65201
573-449-8524

ELECTRIC
Boone Electric Cooperative
1413 Range Line Street
Columbia, MO 65201
573-445-4181 ext 231

LOCATES
Missouri One Call Inc.
1022 N Northwest Drive
Jefferson City, MO 65109
1-800-344-7483

INDEX OF SHEETS

Description	Sheet No.
Cover Sheet	1
Typical Section Sheet	2
Plan / Profile Sheets	3-14
Erosion Control Plans / Details	15-23
Traffic Control Plans / Details	24-26
Fence Details	27-30
Roadway Cross Sections	31-60
Consolidated Water Construction Details	1-4

LEGEND OF SYMBOLS & ABBREVIATIONS

POWER POLE
TELEPHONE POLE
GUY ANCHOR
GUY POLE
STREET LIGHT POLE
YARD LIGHT (NO POLE)
WATER METER
GAS METER
GAS VALVE
WATER VALVE
FIRE HYDRANT
PIPE BOTTLENECK
SANITARY MANHOLE
SANITARY CLEANOUT
SANITARY LATERAL CLEANOUT
TRANSITS POINT
RIGHT OF WAY MARKER
BENCHMARK
BORING LOCATION
SIGN
MAIL BOX
PROPERTY IRON
BUSH
STUMP
TREE (MEDIUM)
TREE
TREE LINE
SILT FENCE/TREE PROTECT
EXISTING WATER SANITARY SEWER
EXISTING SANITARY SEWER LATERAL
EXISTING SANITARY SEWER TO BE ABANDONED
PROPOSED SEWER MAIN AND LATERALS
EXISTING FENCE
PROPOSED FENCE
CURB INLET
TELEPHONE
ELECTRIC
TELEPHONE OR ELECTRIC MANHOLES
WATER MAIN
GAS MAIN
FIBER OPTIC
FLOW LINE
PROPERTY LINE
LOT LINE
EXISTING RIGHT OF WAY LINE
EXISTING EASEMENT
PERMANENT UTILITY EASEMENT
PROPOSED SANITARY SEWER EASEMENT
PROPOSED PERMANENT DRAINAGE EASEMENT
PROPOSED PERMANENT ROADWAY EASEMENT
TEMPORARY ACCESS EASEMENT
TEMPORARY CONSTRUCTION EASEMENT
CROWN LINE
TAX POTHOLE LOCK
TO BE IN PLACE
ABANDONED IN PLACE
DO NOT DISTURB

City of Columbia, Missouri
Department of Public Works

No.	Date	By	Revision

Des. D.M.C.
Dwn. D.M.C.
Chk. D.A.H.
Sheet 1 of 60
Scale None
Date 05/28/15

Digitally signed 6/02/2015

RANGELINE ROAD

Approved By
Director of Public Works
June 2, 2015
Date

TRAVERSE POINTS:

Num	Northing	Easting	Elevation	Description
CP8	1087530.78	1723350.15	892.75	Iron
CP17	1087100.71	1723879.15	877.81	Iron

NORTH

SCALE IN FEET

CURVE 1
PI 5+27.24 (N: 1,087,415.37 E: 1,723,410.68)
PC 2+15.47
PT 8+39.91
Δ 34° 37' 54.43" (LT)
D 5° 43' 46.48"
L 604.44'
T 311.77'
R 1000.00'
SE 6%

PROPOSED 20' PERM. UTILITY ESMT. DEDICATED TO BOONE COUNTY

PROPOSED 80' PERM. ESMT. DEDICATED TO BOONE COUNTY (ROADWAY MAINT. & OPERATIONS)

CP17

MATCH LINE STA 3+40

REMOVE EXIST. FENCE

5' F.B.D.

B-1

B-2

B-3

C.L. RANGELINE RD.

10+00

WOVEN WIRE FENCE W/ BARBED WIRE (1/29)

ROCK BLANKET (TYPE 1) W/ GEOTEXTILE FABRIC 2' DEEP, 6' X 15'

MATCH LINE STA 13+60

WATERLINE CONNECTION 1 (1) STA. 3+16, 20' RIO C.L. 3" PR200 PVC

EXIST. 3" PVC WATERLINE (AIP)

END FENCE REMOVAL

PROPOSED 20' PERM. UTILITY ESMT. DEDICATED TO BOONE COUNTY

INSTALL NEW WATERLINE 3" PR200 PVC

STA. 10+33.79 RIO C.L.

10' CHAIN LINK FENCE W/ BARBED WIRE & WILDLIFE DETERRENT FENCE SKIRT (1/27)

STA. 0+90.80, BEGIN PAVEMENT REMOVAL
OBLITERATE APPROX. 10033 S.Y. OF EXIST. ASPHALT PAVEMENT, PULVERIZE, & STOCKPILE ON AIRPORT PROPERTY AT A LOCATION DESIGNATED BY THE ENGINEER.
PROVIDE SEED & MULCH AFTER REMOVAL.

EXIST. 3" PVC WATERLINE (UIP)
3" REPAIR COUPLING TIE TO EXIST.
NEW 3" PVC WATERLINE
REMOVE
3" GLUE CAP
EXIST. 3" PVC WATERLINE (AIP)

WATERLINE CONNECTION 1 (1)

ALTERNATE BID ITEM:
INSTALL UP TO 12,500' OF CHAIN-LINK FENCE FABRIC ON EXIST. CHAIN-LINK FENCE FOR WILDLIFE DETERRENT FENCE SKIRT AT LOCATIONS AS DIRECTED BY THE ENGINEER.

(3/28) WILDLIFE DETERRENT FENCE SKIRT LOCATIONS AS DIRECTED BY THE ENGINEER

STA 8+80.41, 312.19' RIO C.L. (FIELD VERIFY)
BEGIN 10' CHAIN LINK FENCE W/ BARBED WIRE & WILDLIFE DETERRENT FENCE SKIRT
CONNECT TO EXIST. FENCE

10' CHAIN LINK FENCE W/ BARBED WIRE & WILDLIFE DETERRENT FENCE SKIRT (1/27)

CONTINUE PAVEMENT OBLITERATION

EXIST. CHAIN LINK FENCE (UIP) (FIELD VERIFY LOCATION)

REMOVE APROX. 3332' OF EXIST. CHAIN LINK FENCE
SALVAGE FABRIC FOR NEW FENCE

No.	Date

RANGELINE ROAD
Plan Sheet

City of Columbia, Missouri
Department of Public Works

Approved By

Director of Public Works

Date

BURNS McDONNELL

Digitally signed 5/28/2015

File No.	
Scale:	As Shown
Date:	05-28-15
Des.	D.M.C.
Dwn.	D.M.C.
Chk.	S.A.R.

Sheet
5 of 60

$FILE3

TRAVERSE POINTS:

Num	Northing	Easting	Elevation	Description
CP12	1095830.55	1723547.88	877.73	Iron
CP20	1086801.76	1724016.16	872.37	Iron
CP21	1086113.23	1724459.87	861.74	Iron

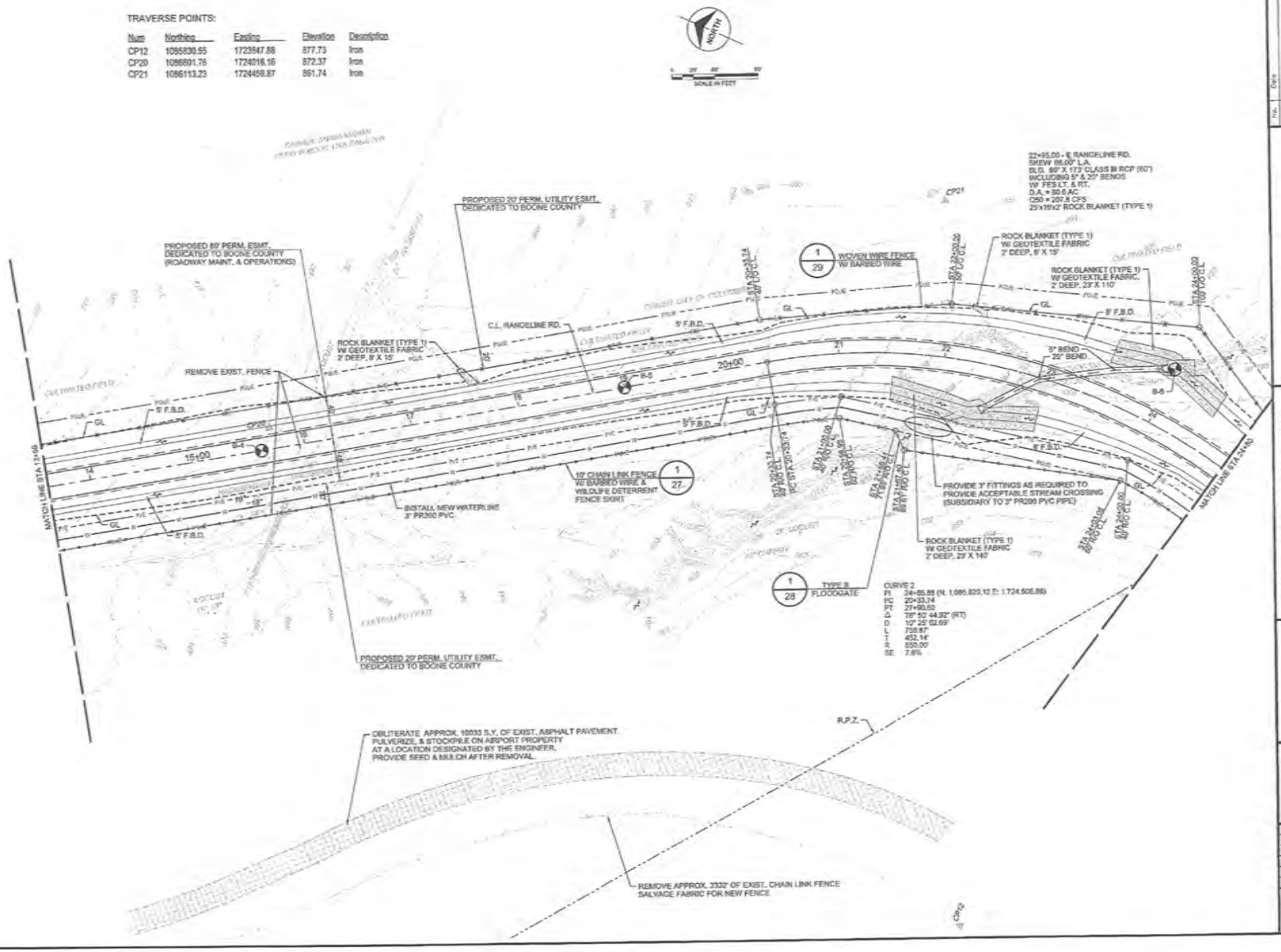

RANGELINE ROAD
Plan Sheet

City of Columbia, Missouri
Department of Public Works

BURNS McDONNELL

Digitally signed 5/28/2015

Sheet
7 of 60

TRAVERSE POINTS:

Num	Northing	Easting	Elevation	Description
CP12	1088830.55	1723547.88	877.73	Iron

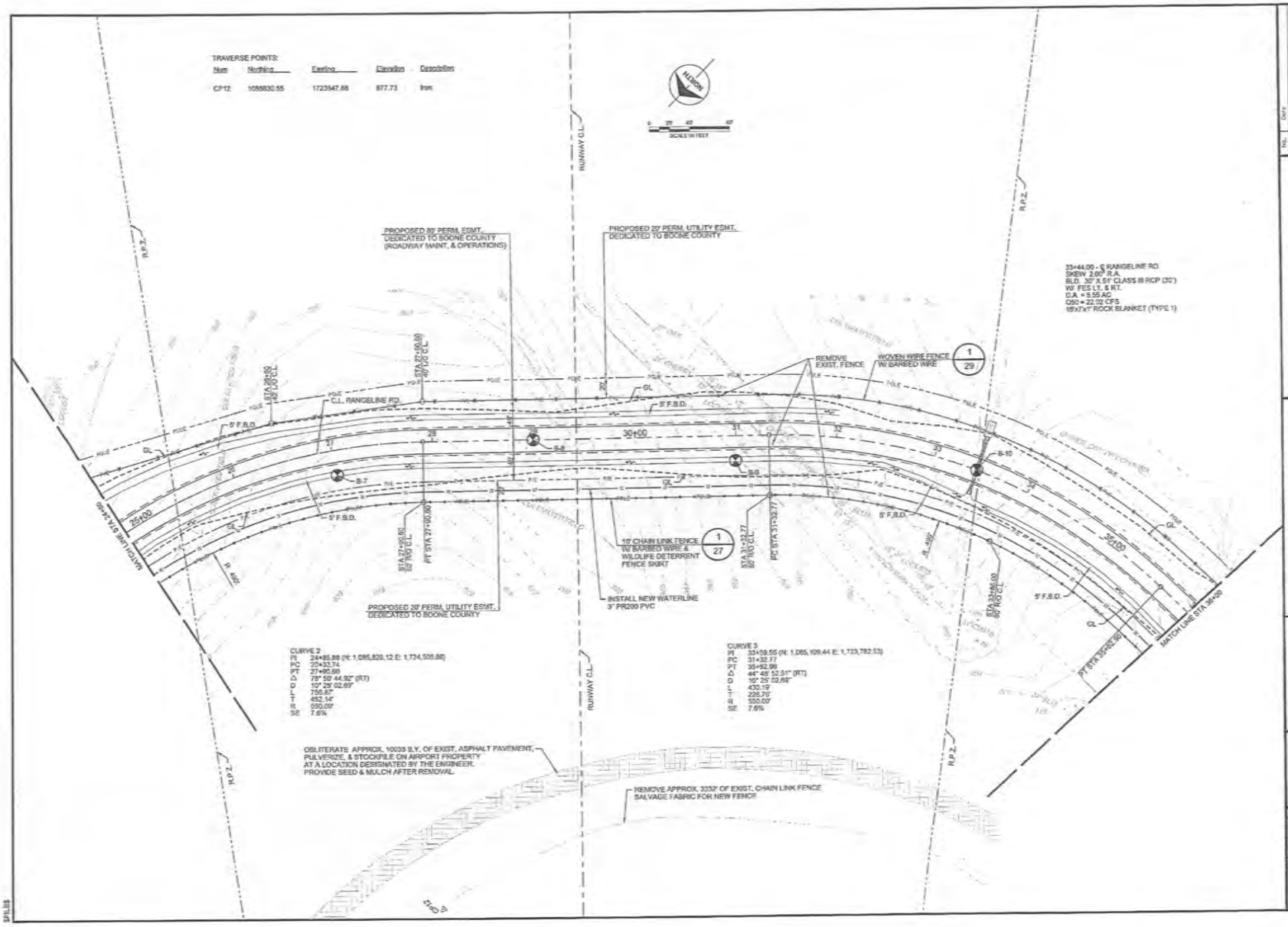

No. Date

RANGELINE ROAD

Plan Sheet

City of Columbia, Missouri
Department of Public Works

Approved By

Director of Public Works

Date

BURNS McDONNELL

Digitally signed 10/28/2015

File No.	
Scale	As Shown
Date	05-28-15
Drn.	D.M.C.
Dsn.	D.M.C.
Chk.	D.J.H.

Sheet
9 of 60

TRAVERSE POINTS:

Num	Northing	Easting	Elevation	Description
CP13	1085428.44	1722713.92	893.74	Iron

CURVE 4
PI 50+07.79 (N: 1,085,109.44 E: 1,722,110.93)
PC 44+71.89
PT 53+21.55
Δ 88° 30' 03.42" (LT)
D 10° 20' 02.69"
L 849.69'
T 535.93'
R 550.00'
SE 7.6%

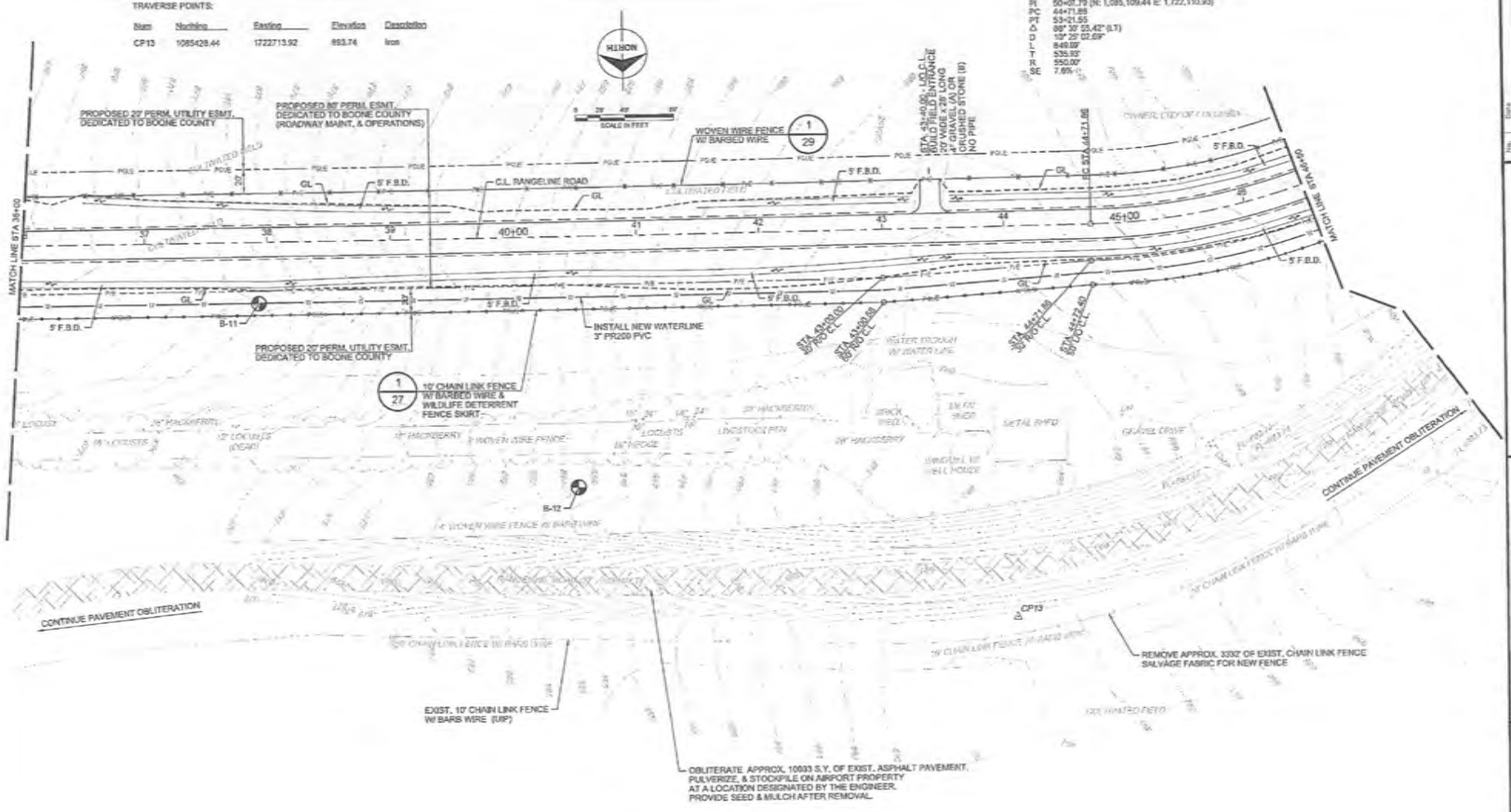

RANGELINE ROAD
Plan Sheet

City of Columbia, Missouri
Department of Public Works

Approved By
Director of Public Works
Date

BURNS McDONNELL

Digitally signed 5/28/2015

File No.	
Scale	As Shown
Date	05-28-15
Des.	D.H.C.
Dwn.	D.H.C.
Chk.	D.A.K.

Sheet
11 of 60

SFILES

TRAVERSE POINTS:

Mon	Northing	Easting	Elevation	Description
CP14	1085084.04	1722153.06	852.54	bmn

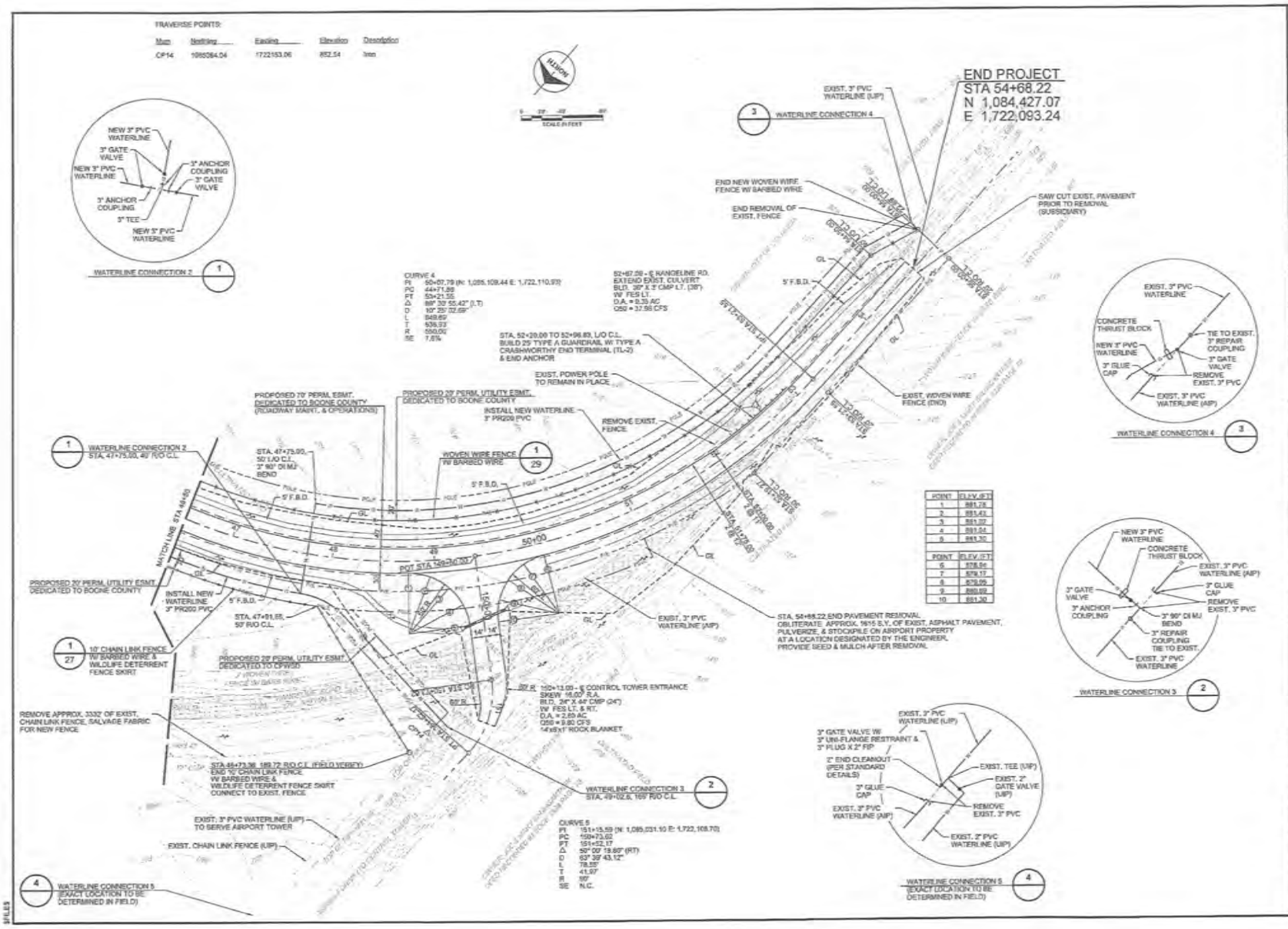

RANGELINE ROAD
Plan Sheet

City of Columbia, Missouri
Department of Public Works

Approved By
Director of Public Works
Date

BURNS MCDONNELL

Digitally signed 5/28/2015

File No.
Scale: As Shown
Date: 05-28-15
Des. D.N.C.
Dwn. D.N.C.
Chk. D.A.R.

Sheet
13 of 60

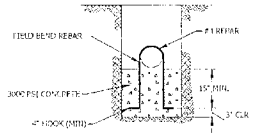

HAIRPIN REBAR DETAIL

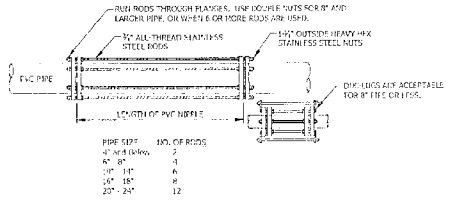

PIPE SIZE	NO. OF RODS
4" and below	2
6" - 8"	4
10" - 14"	6
16" - 18"	8
20" - 24"	12

TIEBACK RODS MAY BE ATTACHED TO D.I. FITTINGS, VALVES, HYDRANTS, AND CONCRETE RESTRAINING BLOCKS.

TIEBACK ROD DETAIL

TIEBACK ROD & HAIRPIN REBAR DETAILS

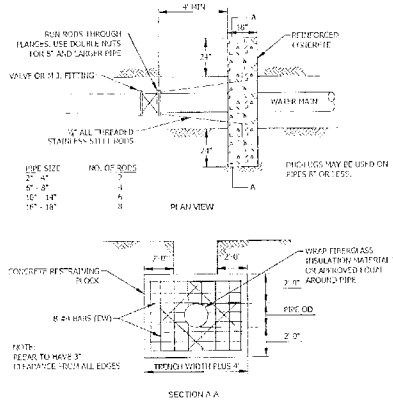

PIPE SIZE	NO. OF RODS
2" - 4"	2
6" - 8"	4
10" - 14"	6
16" - 18"	8

RESTRAINING BLOCK DETAIL

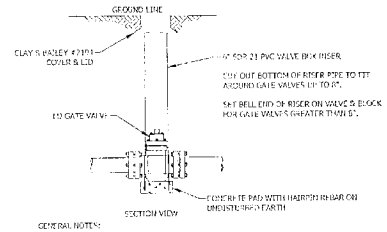

GENERAL NOTES:

1. ANCHOR COUPLING OR PVC PIPE WITH TIEBACK RODS WILL BE REQUIRED BETWEEN VALVE AND FITTINGS
2. WRAP VALVE AND JOINTS WITH VISQUEEN.
3. VALVE AND RISER SHALL BE PLUMB AND CHECKED BY A LEVEL.

GATE VALVE AND VALVE BOX DETAIL

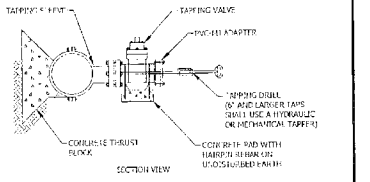

TAPPING SLEEVE AND VALVE ASSEMBLY

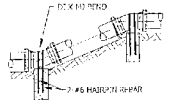

VERTICAL THRUST BLOCKS									
Pipe	Min. Volume of Concrete					Min. Bearing Area			
Size	11.25	22.5	45	90		11.25	22.5	45	90
(in)	(cy)	(cy)	(cy)	(cy)		(sf)	(sf)	(sf)	(sf)
4	0.2	0.4	0.7	1.0		0.0	0.1	0.6	2.0
6	0.4	0.8	1.5	2.1		0.1	0.3	1.2	4.2
8	0.7	1.4	2.5	3.5		0.1	0.5	2.1	7.2
10	1.1	2.1	3.9	5.5		0.2	0.8	3.3	11.1
12	1.5	3.0	5.5	7.7		0.3	1.2	4.6	15.7

VERTICAL BEND THRUST BLOCK DETAIL

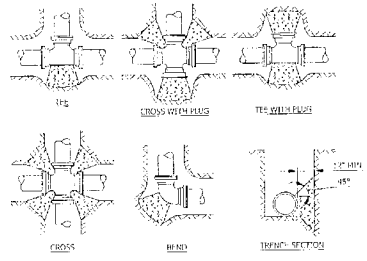

HORIZONTAL THRUST BLOCKS							
Pipe	Minimum Bearing Area						
Size	11.25	22.5	45	90	Tee/Plug	Cross*	
(in)	(sf)	(sf)	(sf)	(sf)	(sf)	(sf)	
4	0.4	0.9	1.5	2.8	2.0	1.0	
6	0.8	1.7	3.2	6.0	4.2	2.1	
8	1.4	2.9	5.5	10.1	7.2	3.6	
10	2.2	4.4	8.5	15.8	11.1	5.6	
12	3.1	6.1	12.0	22.2	15.7	7.8	
14	3.7	7.4	14.5	26.7	18.9	9.5	
16	4.8	9.6	18.9	34.9	24.7	12.3	

* Use at each corner

HORIZONTAL BEND THRUST BLOCK DETAIL

1. THRUST BLOCKS SHALL BE FORMED AND POURED AGAINST UNDISTURBED SOIL. KEEP FITTINGS CLEAR OF CONCRETE, WRAPPED IN 8 MIL VINYL PLASTIC PROTECTOR
2. THICKNESS BETWEEN FITTING AND SOIL SHALL BE A MINIMUM OF 12".
3. CONCRETE SHALL HAVE 3000 PSI MINIMUM COMPRESSIVE STRENGTH.
4. PLUGS SHALL BE WRAPPED WITH 8 MIL VISQUEEN.

THRUST BLOCKING DETAIL

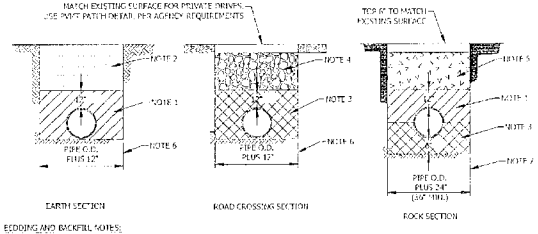

BEDDING AND BACKFILL NOTES:

1. SUITABLE EARTH EXCAVATED MATERIAL FREE FROM DEBRIS, MUCK, MUD BALLS, ROCK, AND HARD OBJECTS LARGER THAN 1" DIA. PIPE SHALL REST ON UNDISTURBED EARTH WITH CUTOUT FOR PIPE BELL.
2. SUITABLE EARTH EXCAVATED MATERIAL FREE FROM DEBRIS, MUCK, MUD BALLS, ROCK, AND HARD OBJECTS LARGER THAN 2" DIA.
3. WASTE ROCK 1/4" OR SMALLER.
4. FOR COUNTY ROAD USE 2.5" MINUS LIMESTONE ROCK. FOR OTHER ROADWAYS AND PRIVATE DRIVES USE 1" CLEAN LIMESTONE ROCK, OR AS REQUIRED BY LOCAL JURISDICTION
5. SUITABLE MIX OF EARTH EXCAVATED MATERIAL WITH NO MORE THAN 50% EXCAVATED ROCK NO LARGER THAN 1" SIZE.
6. ADDITIONAL TRENCH WIDTH AS REQUIRED TO INSTALL FITTINGS AND THRUST BLOCKS.
7. ADDITIONAL TRENCH WIDTH TO INSTALL FITTINGS AND THRUST BLOCKS TO BE PIPE O.D. PLUS 32" WITH A MINIMUM OF 42".

GENERAL NOTES:

1. BEDDING MATERIAL SHALL BE TAMPED IN LAYERS UNDER THE PIPE HAUNCHES AND AROUND THE PIPE TO TOP OF PIPE, TO PROVIDE A UNIFORM BEARING SURFACE.
2. ANY OVER EXCAVATION DUE TO REMOVAL OF UNSUITABLE MATERIAL IN THE BOTTOM OF THE TRENCH SHALL BE BACKFILLED WITH ACCEPTABLE MATERIAL AND COMPACTED.
3. COVER OVER THE PIPE SHALL BE 48" UNLESS OTHERWISE SHOWN ON THE PLANS.
4. LOCATOR WIRE, NOT SHOWN, SHALL BE INSTALLED ON ALL PIPE.
5. FOR ROCK SECTION, PROVIDE A 5' LONG EARTHEN DAM SECTION OF SUITABLE EARTH EXCAVATED MATERIAL FROM BOTTOM OF TRENCH TO TOP OF TRENCH, MINIMUM SPACING OF 100 FT, OR AS DIRECTED BY THE DISTRICT INSPECTOR.

PIPE TRENCHING DETAIL

GENERAL CONSTRUCTION NOTES

GENERAL

1. NO WORK SHALL BE STARTED WITHOUT LOTTERING COMMO (DOWE NO. 1 AT LEAST 72 HOURS IN ADVANCE AT (573) 334-8723.
2. CONTRACTOR SHALL OBTAIN A BOONE COUNTY PERMIT FROM PUBLIC WORKS, WHERE REQUIRED.
3. DISTRICT WILL OBTAIN A MODOT PERMIT, WHERE REQUIRED. ANY OTHER PERMITS ARE CONTRACTOR'S RESPONSIBILITY.
4. CONTRACTOR IS RESPONSIBLE TO HAVE ALL UTILITIES WITHIN PROJECT AREA LOCATED IN THE FIELD PRIOR TO CONSTRUCTION. CONTACT MISSOURI ONE CALL SYSTEM AT 1-800-DIG-RITE OR 811.
5. WATER LINE ALIGNMENT TO BE STAKED BY _____. VARIANCE FROM APPROVED ALIGNMENT MUST BE APPROVED BY WATER DISTRICT PRIOR TO INSTALLATION.

INSTALLATION

6. MINIMUM COVER ON WATER LINE SHALL BE 48", UNLESS OTHERWISE NOTED.
7. LOCATOR WIRE SHALL BE INSTALLED ON ALL PIPE INCLUDING SERVICE CONNECTIONS. TWO STRANDS OF LOCATOR WIRE SHALL BE INSTALLED ON HIGHWAY BORES AND CREEK CROSSINGS.
8. MAINTAIN 10' OF HORIZONTAL AND 18" OF VERTICAL SEPARATION BETWEEN WATER LINES AND NON-POTABLE LINES.
9. CONTRACTOR TO CONTACT ALL SERVICE CONNECTIONS, AS REQUIRED.
10. CONCRETE THRUST BLOCKING FORMS TO BE APPROVED BY DISTRICT INSPECTOR BEFORE POURING BLOCKING. CONCRETE BLOCKS OR CONCRETE SHALL NOT BE ALLOWED.
11. ALL LINES TO BE FLUSHED, DISINFECTED AND PRESSURE TESTED PRIOR TO CONNECTING TO EXISTING MAIN. TEMPORARY BLOWOFFS, FLUSH VALVES, ETC. WILL BE THE CONTRACTOR'S RESPONSIBILITY FOR INSTALLATION AND REMOVAL AS NECESSARY.
12. TRENCH BACKFILL UNDER PRIVATE ROAD CROSSINGS SHALL BE 1" CLEAN ROCK. TRENCH BACKFILL FOR PRIVATE HIGHWAYS AND COUNTY ROADS SHALL BE 1" COMPACTED SURFACE ROCK.
13. TIE-INS OR BUTT TAP TIE-INS SHALL BE MADE ONLY AFTER CONTRACTOR OR INDIVIDUAL HAS COORDINATED AND ACQUIRED PRIOR APPROVAL FROM OWNER BOONE NO. 1 AS OF:
    A) ACTUAL TIME OF DAY SHOULD WILL BE DISRUPTED.
    B) METHOD OF TIE-IN AND MATERIAL HAVE BEEN APPROVED BY DISTRICT INSPECTOR.
    C) ALL MATERIALS NEEDED FOR THE TIE-IN SITE ARE ASSEMBLED AS FAR AS POSSIBLE.
    D) NO TIE-INS TO BE SCHEDULED ON FRIDAYS, DISTRICT PAID HOLIDAYS OR WEEKENDS.
14. GENERAL JOB CLEANUP, SEED AND MULCH AS PER PROJECT SPECIFICATIONS
15. ALL PIPES WITH OPEN ENDS INDICATED FOR ABANDONMENT SHALL BE CAPPED
16. VALVES TO BE ABANDONED WILL REMOVE THE RISER TO AT LEAST 12" BELOW THE GROUND. THE LID WILL BE GIVEN TO THE WATER DISTRICT.
17. FITTINGS TO BE MECHANICAL JOINT DUCTILE IRON. PVC FITTINGS GREATER THAN 3" WILL NOT BE ALLOWED.
18. TEES WITH ANCHOR COUPLINGS MAY BE USED IN LIEU OF ANCHOR TEES SHOWN ON THE PLANS.
19. USE OF 3/4" ALL-THREAD STAINLESS STEEL TIE BACK RODS MAY BE APPROVED BY THE DISTRICT INSPECTOR IN PLACE OF DIX-LUG FOR COUPLINGS.

STANDARD CONSTRUCTION DETAILS

BARTLETT & WEST | CONSOLIDATED WATER Boone County, Missouri | ISSUE DATE JUNE 2015 | DRAWING NO. 1

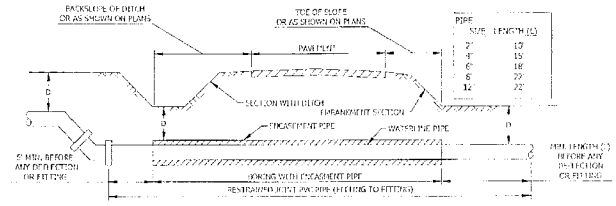

PIPE SIZE	LENGTH (L)
2"	17'
4"	15'
6"	18'
8"	27'
12"	22'

"D"= 48" FOR STEEL ENCASEMENT AND 72" FOR HDPE ENCASEMENT UNLESS OTHERWISE SPECIFIED

NOTES:
1. CASING TYPE, SIZE AND THICKNESS TO BE DETERMINED BY PERMITTING AGENCY OR SHOWN ON PLANS.
2. REFER TO ENCASEMENT DETAIL FOR SPACER AND END SEAL INSTALLATION.
3. LOCATOR WIRE IS NOT SHOWN.

ROADWAY CROSS-SECTION

TYPICAL BORING UNDER STATE HIGHWAY

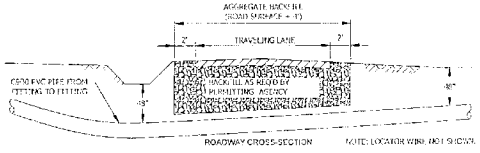

TYPICAL OPEN CUT ROAD CROSSING

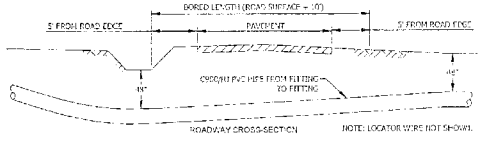

TYPICAL BORED ROAD CROSSING

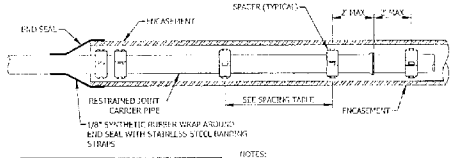

SPACING TABLE		
Carrier Pipe Diameter (in)	Skid Spacing (Maximum (ft))	Spacer Width (MIN)
3	5	5
4	4.5	5
6	6	6
8	7	8
10	8.5	8
12	8.5	8
12+	10	8

NOTES:
1. SPACER O.D. SHALL BE AT LEAST 1/2" LARGER THAN PIPE I.D.
2. CLEARANCE BETWEEN SPACER O.D. AND ENCASEMENT PIPE I.D. SHALL BE AT LEAST 1 1/2".
3. A MINIMUM OF 3 SPACERS PER INDIVIDUAL PIPE REGARDLESS OF PIPE LENGTH.
4. USE DOUBLE SPACERS AT END & ONE EACH SIDE OF A JOINT CASING.
5. END SEALS TO BE SYNTHETIC RUBBER BOOT WITH STAINLESS STEEL ANNULAR BINDING STRAPS.
6. LOCATOR WIRE NOT SHOWN.

ENCASEMENT PIPE SPACER DETAIL

NOTES:
1. VALVE, VALVE RISER AND DISCHARGE RISER PIPE TO BE PLUMB AND CHECKED BY A LEVEL.
2. APPROVED FIRE HYDRANTS ARE: AMERICAN DARLING B-84-B-5, CLOW MODEL 950, AND MUELLER CENTURION 52-250.
3. COMMERCIAL HYDRANT SETTING SHALL BE 6" PIPING, VALVE, ANCHOR COUPLING AND HYDRANT SHOE IN PLACE OF 6" SHOWN ON DRAWING.
4. 4" POST HYDRANT SETTING SHALL BE 4" PIPING, GATE VALVE, ANCHOR COUPLING IN PLACE OF 6" SHOWN ON DRAWING.

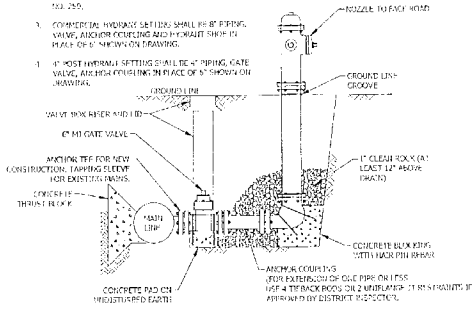

FIRE HYDRANT DETAIL

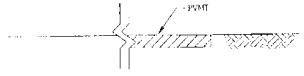

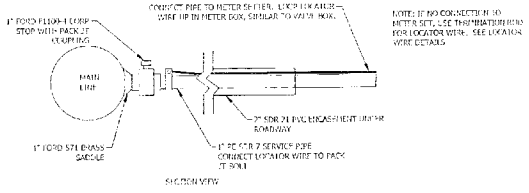

1" SERVICE LINE ROADWAY CROSSING

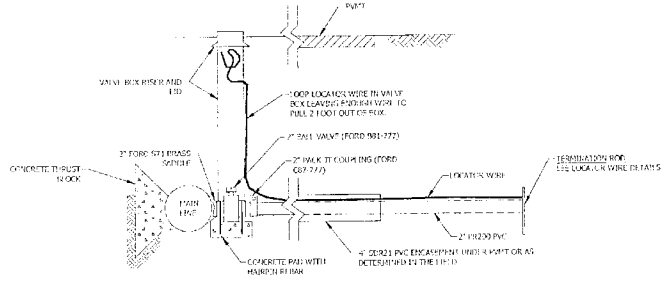

2" SERVICE LINE ROADWAY CROSSING DETAIL

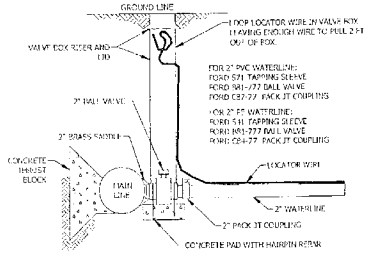

2" CONNECTION TO MAIN

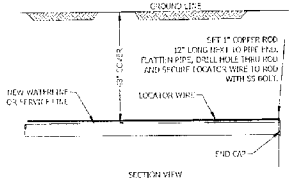

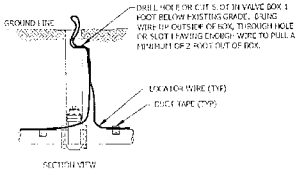

LOCATOR WIRE NOTES:

1. LOCATOR WIRE TO BE PE-HD SOLID BLUE TRACER WIRE AS MANUFACTURED BY KRUS-TECH WIRE COMPANY.
2. DUCT TAPE LOCATOR WIRE TO 10" OF PIPE ON EACH SIDE OF BELL AND ONE IN THE MIDDLE OF THE PIPE.
3. AT ALL ENDS OF WATER LINES, THE LOCATOR WIRE SHALL BE EXTENDED 2' ABOVE THE TOP OF THE GROUND AND BE ACCESSIBLE. THERE SHALL BE NO MORE THAN ONE SPLICE BETWEEN ACCESS POINTS AT VALVES.
4. TWO SETS OF LOCATOR WIRE SHALL BE INSTALLED ON PIPE AT ALL CROSSINGS UNDER HIGHWAYS, AND CREEKS, OR AT ADDITIONAL LOCATIONS AS SHOWN ON THE PLANS.
5. DO NOT WRAP WIRE AROUND BOLTS, NUTS, ETC.
6. SPLICE LOCATOR WIRE USING SPLICING KIT 3M DBR. DUCT TAPE LOCATOR WIRE TO PIPE ON EACH SIDE OF THE SPLICE.
7. WHERE CALLED FOR ON THE PLANS FOR A SPLICE BOX, THE SPLICE BOX SHALL BE IDENTICAL TO A VALVE BOX RISER AND LID WITH THE INSTALLATION OF THE WIRE IDENTICAL TO THAT IN A VALVE BOX.
8. LOCATOR WIRE INSTALLATION CONTINUITY SHALL BE WARRANTED UNDER THE SAME 1 YEAR PIPE AND WORKMANSHIP WARRANTY.

LOCATOR WIRE DETAILS

STANDARD CONSTRUCTION DETAILS

BARTLETT & WEST

CONSOLIDATED WATER
Jackson County, Missouri

ISSUE DATE: JUNE 2015
DRAWING NO: 2

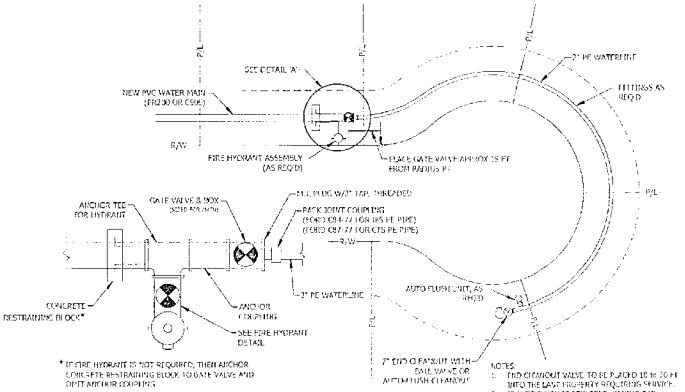

TYPICAL INSTALLATION AT CUL-DE-SAC

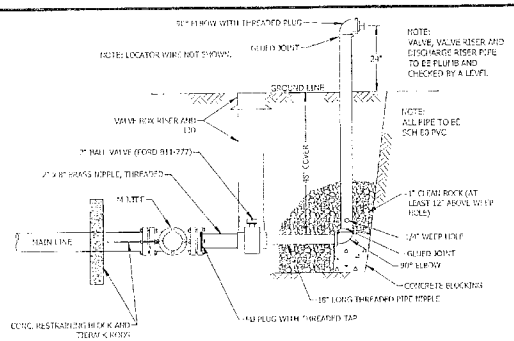

END CLEANOUT DETAIL AT TEE OR CROSS

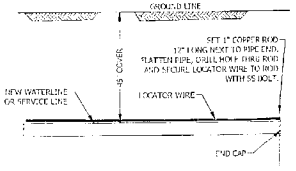

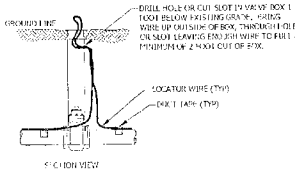

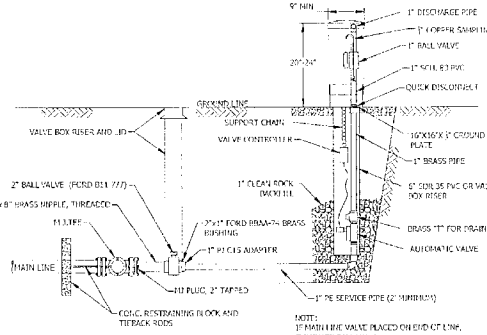

REQUIREMENTS

1. AUTOMATIC FLUSHING DEVICE SHALL HAVE A 1" BRASS FIP INLET, LEADING VERTICALLY INTO A 1" AUTOMATIC SOLENOID VALVE. AUTOMATIC SOLENOID VALVE SHALL HAVE INTERNAL, SELF-CLEANING DEBRIS SCREEN, AND HAVE A 220 PSI RATING. SOLENOID SHALL HAVE NO LOOSE PARTS WHEN REMOVED FROM VALVE.
2. SOLENOID VALVE SHALL HAVE AN O-RING CONNECTOR LOCATED UNDER THE VALVE.
3. EACH UNIT SHALL BE FURNISHED WITH A STAND-ALONE VALVE CONTROLLER. VALVE CONTROLLER WILL NOT REQUIRE A SECOND HAND-HELD DEVICE FOR PROGRAMMING, WITH A MINIMUM OF 4 FLUSHING CYCLES PER DAY.
4. VALVE CONTROLLER SHALL BE SUBMERSIBLE TO 12', OPERATE WITH A 9 VOLT BATTERY AND HAVE RESIN SEALED ELECTRICAL COMPONENTS.
5. ALL ABOVE GROUND COMPONENTS SHALL BE CONTAINED WITHIN A UV RESISTANT LOCKING DOMED COVER.
6. UNIT SHALL BE AS MANUFACTURED BY KUPFERLE FOUNDRY COMPANY MODEL 5400 A, ST. LOUIS, MO, OR APPROVED EQUAL.
7. VALVE, VALVE RISER TO BE PLUMB AND CHECKED WITH A LEVEL.

AUTO FLUSH UNIT DETAIL

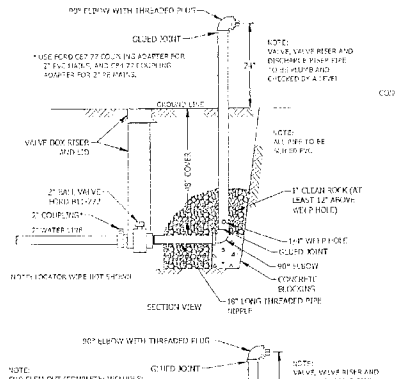

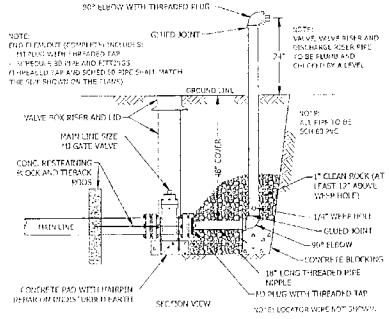

END CLEANOUT DETAILS

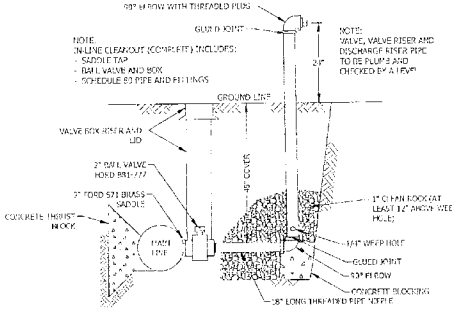

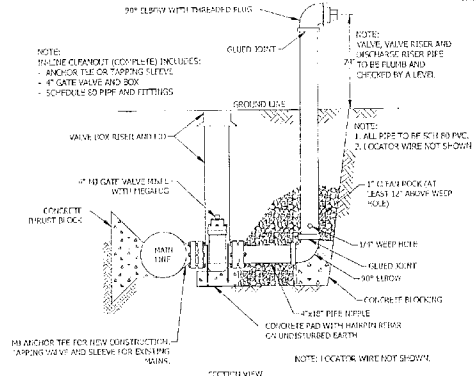

IN-LINE CLEANOUT DETAILS

LOCATOR WIRE NOTES:

1. LOCATOR WIRE TO BE DE-45 SOLID BLUE TRACER WIRE AS MANUFACTURED BY KRIS-TECH WIRE COMPANY.
2. DUCT TAPE LOCATOR WIRE TO TOP OF PIPE ON EACH SIDE OF BELL AND ONE IN THE MIDDLE OF THE PIPE.
3. AT ALL ENDS OF WATERLINES, THE LOCATOR WIRE SHALL BE EXTENDED 2' ABOVE THE TOP OF THE GROUND AND BE ACCESSIBLE. THERE SHALL BE NO MORE THAN ONE SPLICE BETWEEN ACCESS POINTS AT VALVES.
4. TWO SETS OF LOCATOR WIRE SHALL BE INSTALLED ON PIPE AT ALL CROSSINGS UNDER HIGHWAYS, AND CREEKS, OR AT ADDITIONAL LOCATIONS AS SHOWN ON THE PLANS.
5. DO NOT WRAP WIRE AROUND BOLTS, NUTS, ETC.
6. SPLICE LOCATOR WIRE USING SP 3CR3 WITH 3M DBR. DUCT TAPE LOCATOR WIRE TO PIPE ON EACH END OF THE SPLICE.
7. WHERE CALLED FOR ON THE PLANS FOR A SPLICE BOX, THE SPLICE BOX SHALL BE IDENTICAL TO A VALVE BOX RISER AND LID WITH THE INSTALLATION OF THE WIRE IDENTICAL TO THAT IN A VALVE BOX.
8. LOCATOR WIRE INSTALLATION CORRECTLY SHALL BE WARRANTED UNDER THE SAME 1 YEAR PIPE AND WORKMANSHIP WARRANTY.

LOCATOR WIRE DETAILS

STANDARD CONSTRUCTION DETAILS		
BARTLETT & WEST	CONSOLIDATED WATER (Boone County, Missouri)	DATE: JUNE 2015 SHEET No. 3

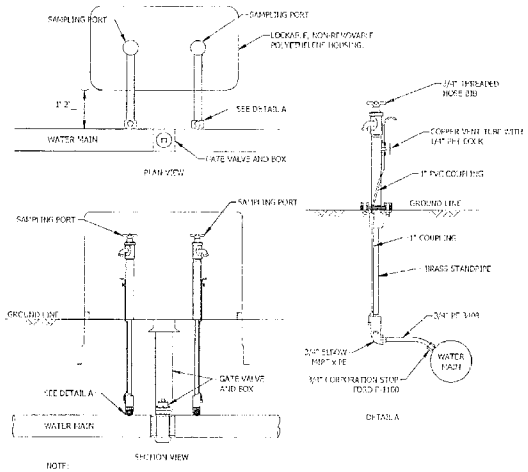

NOTE:

SAMPLING STATION SHALL BE DUAL STANDPIPE DESIGN, PROVIDING TWO INDEPENDENT ALL BRASS WATER STREAMS FOR UPSTREAM AND DOWNSTREAM SAMPLING.

EACH SAMPLING STATION SHALL BE PROVIDED WITH TWO INLETS, 3/4" IN SIZE, AND TWO THREADED BRASS SAMPLING HOSE BIBS LOCATED ABOVE GROUND NEAR TOP OF EACH STANDPIPE. A COPPER VENT TUBE ON EACH 3 1/2' BURY STANDPIPE WILL ENABLE THE WATERWAYS TO BE PUMPED FREE OF STANDING WATER TO PREVENT FREEZING AND MINIMIZE BACTERIA GROWTH.

EACH STANDPIPE SHALL OPERATE INDEPENDENTLY USING A ROTATING HANDLE AND BE ENCLOSED IN DOT IN-RATED LOCKABLE PLASTIC BOX COURT.

ALL WORKING PARTS SHALL BE BRASS AND REMOVABLE FROM ABOVE GROUND WITH NO DIGGING, AS MANUFACTURED BY KURT EILE FOUNDRY COMPANY, ST. LOUIS, MO. MODEL #1100, OR APPROVED EQUAL.

WATER SAMPLING STATION

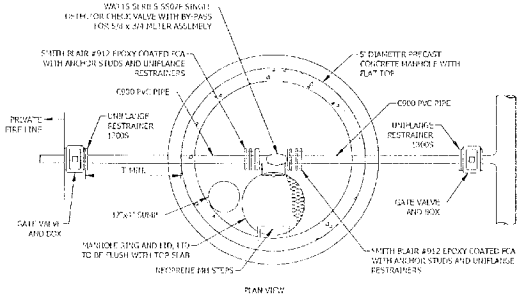

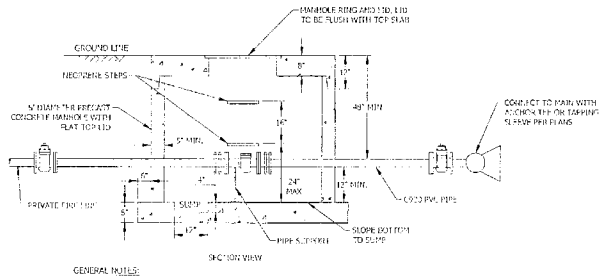

GENERAL NOTES:

1. PRECAST STRUCTURE TO MEET ASTM C478 USING 4000 PSI CONCRETE.
2. RISER JOINTS TO BE A 2.5"x1" MASTIC SEAL.
3. ALL BASES & BOTTOM RISER TO BE POURED MONOLITHIC.
4. FRAME & COVER TO BE DEETER 1100 OR NEENAH R-1900-A.
5. STEP TO BE AMERICAN STEP PL-18 OR EQUAL.
6. ALL PIPE PENETRATIONS TO BE Z-LOCK SEALED.
7. MANHOLE TO BE ORDERED CUSTOM BUILT TO HEIGHT AND EXACT PIPE DEPTH. FOR CORRECT PLACEMENT OF THE PIPE Z LOCK SEALS, MAY REQUIRE EXPOSING EXISTING MAIN TO DETERMINE CORRECT PIPE CENTERLINE DEPTH PRIOR TO ORDERING MANHOLE. PROVIDE PRE-CASTER SIZE OF PIPE, DISTANCE FROM CENTERLINE OF PIPE TO GROUND LINE. THE MANHOLE HEIGHT AND DISTANCE BETWEEN THE CENTERLINE OF PIPE AND TOP OF FLOOR WILL NEED TO BE DETERMINED WITH PRE-CASTER.

DETECTOR CHECK VALVE MANHOLE

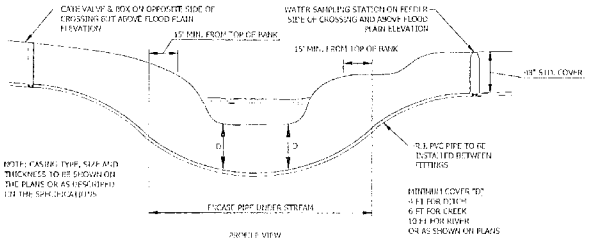

TYPICAL STREAM CROSSING

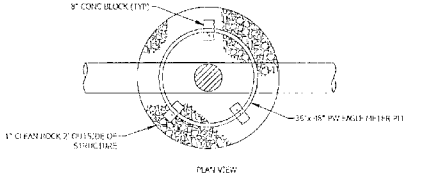

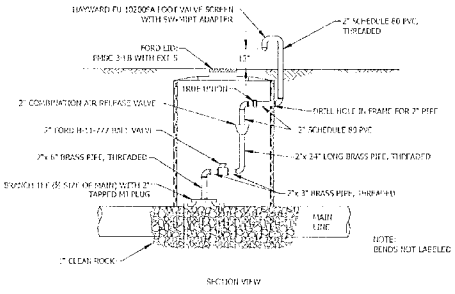

AIR RELEASE PIT DETAIL

STANDARD CONSTRUCTION DETAILS		
BARTLETT & WEST	CONSOLIDATED WATER Boone County, Missouri	DATE: JUNE 2015 PAGE NO. 4

CONSOLIDATED
WATER
Boone County, Missouri

WATER DISTRIBUTION SPECIFICATIONS
2013

CONSOLIDATED
PUBLIC WATER SUPPLY DISTRICT NO. 1
BOONE COUNTY, MISSOURI

STATE OF MISSOURI
KENNETH A. STUMPF
ENGINEER NO. E-19168
REGISTERED PROFESSIONAL ENGINEER

3-26-13

KENNETH A. STUMPF
PE LICENSE NO. E-19168

BARTLETT & WEST, INC.
MISSOURI CERTIFICATE OF AUTHORITY NO. 000167
1719 SOUTHRIDGE DRIVE, SUITE 100
JEFFERSON CITY, MO 65109

EXHIBIT "B"

SECTION 02512

WATER DISTRIBUTION SYSTEM
TABLE OF CONTENTS

1. GENERAL 2

1.1 SCOPE 2
1.2 SUBMITTALS 2

2. TRENCH EXCAVATION & BACKFILL 2

2.1 CONSTRUCTION STAKING 2
2.2 SITE PREPARATION 2
2.3 UNDERGOUND UTILITY LOCATIONS 2
2.4 SEPARATION OF WATER MAINS, SANITARY SEWERS AND STORM SEWERS 2
2.5 PIPE TRENCH EXCAVATION 3
2.6 BEDDING 5
2.7 BACKFILLING 6

3. PIPE, JOINTS AND FITTINGS 7

3.1 GENERAL 7
3.2 REFERENCES 7
3.3 PIPE 7
3.4 CASING PIPE 8
3.5 PIPE JOINTS 9
3.6 FITTINGS 10

4. VALVES, STRUCTURES AND APPURTENANCES 11

4.1 VALVES 11
4.2 VALVE BOX 12
4.3 DETECTOR CHECK VALVE 12
4.4 FIRE HYDRANT 12
4.5 AUTOMATIC FLUSHING UNIT 12
4.6 CLEANOUT 12
4.7 AIR RELEASE VALVE 12
4.8 WATER SAMPLING STATION 13
4.9 SERVICE METER & PIT 13

5. INSTALLATION 13

5.1 PIPES, FITTINGS, AND STRUCTURES 13
5.2 POLYETHYLENE WRAP (POLYWRAP) 15
5.3 LOCATOR WIRE 16
5.4 TAPPING SLEEVES 16
5.5 TAPPING SADDLES 16
5.6 TIEBACK RODS 16
5.7 CONCRETE THRUST BLOCKING 17

6. PIPE BORING 18

6.1 GENERAL REQUIREMENTS 18
6.2 CASING AND SPACER DATA 18
6.3 CASING INSTALLATION 19
6.4 PVC CARRIER PIPE INSTALLATION IN CASING 19
6.5 DIRECTIONAL BORING 19

7. TESTING OF PIPELINE 20

7.1 FIELD INSPECTION 20
7.2 WATER FOR TESTING 21
7.3 LINE CLEANING 21
7.4 DISINFECTING NEW WATER MAINS 21

7.5 DISINFECTION AFTER CONNECTION/REPAIR TO EXISTING WATERLINES 22
7.6 LEAKAGE TESTING 23

8. SITE RESTORATION 24

8.1 CLEAN UP 24
8.2 REVEGETATION 25

1. GENERAL

1.1 SCOPE

The work included in these specifications consists of the construction of a new water system. The work consists of the complete and satisfactory construction, testing and sterilization of the system, ready for use as shown and specified. Construction plans indicate all work that is to be performed.

The work includes the furnishing of all materials, tools, and equipment to install new water pipe, fittings, valves, valve covers, hydrants, meters and all incidental and miscellaneous work necessary to complete the project.

1.2 SUBMITTALS

Contractor shall submit to the District for review all materials proposed for the project, including pipe, valves, fire hydrants, fittings, and other items. Gravel, concrete, asphalt and seeding does not have to be submitted, but will be approved by the District Inspector prior to installation.

2. TRENCH EXCAVATION & BACKFILL

2.1 CONSTRUCTION STAKING

The District will stake water lines, hydrants, structures, etc. shown on the drawings. Service meter pits and service connections to mains will be field determined by the District Inspector.

2.2 SITE PREPARATION

A. Contractor shall remove trees, bushes, tree stumps, roots, debris, and other vegetation, as required for installations.

B. Contractor shall remove pavement, road surfacing, junk and structures.

C. Contractor shall mark adjacent property, fences, trees, and structures that are to be protected.

D. All salvageable materials, as determined by the District Inspector, shall be set aside for District pickup. All non-salvageable materials shall be removed from the site and properly disposed by Contractor.

2.3 UNDERGOUND UTILITY LOCATIONS

The Contractor shall comply with Sec. 319.015 - 319.050 RS MO and shall proceed with caution in the excavation and preparation of the trench so that the exact location of underground structures, both known and unknown, may be determined, and he shall be held responsible for the repair of such structures when broken or otherwise damaged because of carelessness on his part.

The actual location of existing utilities is the sole responsibility of the Contractor. Those shown on the plans are given to call particular attention to areas of special concern. Contractor shall contact one call (1-800-DIG-RITE), as well as individual utilities as necessary to insure all utilities are located in the field prior to construction.

2.4 SEPARATION OF WATER MAINS, SANITARY SEWERS AND STORM SEWERS

A. General

The following factors should be considered in providing adequate separation prior to trench excavation as required by Missouri Department of Natural Resources:

1. Materials and type of joints for water and sewer pipes.
2. Soil conditions.
3. Service and branch connections to the water main and sewer line.
4. Compensating variations in the horizontal and vertical separations.
5. Space for repair and alterations of water and sewer pipes.
6. Off-setting of pipes around manholes.

B. Parallel Installation

Water mains shall be laid at least 10 feet horizontally from any existing or proposed sewer. The distance shall be measured edge to edge. In cases where it is not practical to maintain a ten-foot separation, the District may allow deviation on a case-by-case basis, if supported by data from the design engineer. Such deviation may allow installation of the water main closer to a sewer, provided that the water main is laid in a separate trench or on an undisturbed earth shelf located on one side of the sewer and on either case, at such an elevation that the bottom of the water main is at least 18 inches above the top of the sewer. In areas where the recommended separations cannot be obtained, either the waterline or the sewer line shall be constructed of mechanical joint pipe or cased in a continuous casing.

C. Crossings

Water mains crossing sewers shall be laid to provide a minimum vertical clear distance of 18 inches between the outside of the water main and the outside of the sewer. This shall be the case where the water main is either above or below the sewer. At crossings, the full length of water pipe shall be located so both joints will be as far from the sewer as possible. Special structural support for the water and sewer pipes may be required. In areas where the recommended separations cannot be obtained, either the waterline or the sewer line shall be constructed of mechanical joint pipe or cased in a continuous casing no less than ten feet on both sides of the crossing.

D. Exception

The Department of Natural Resources must specifically approve any variance from the requirements of this Section, Subsections B and C, above, when it is impossible to obtain the specified separation distances.

E. Force Mains

There shall be at least a ten-foot horizontal separation between water mains and sanitary sewer force mains, and they shall be placed in separate trenches. There shall be an 18-inch vertical separation at crossings as required in this Section, Subsection C. In areas where these separations cannot be obtained, either the waterline or the sewer line shall be encased in a continuous joint-less pipe.

F. Sewer Manholes

No waterline shall be located closer than 10 feet to any part of a sewer manhole.

G. Disposal Facilities

No waterline shall be located closer than 25 feet to any on-site wastewater disposal facility, agricultural waste disposal facility, or landfill.

2.5 PIPE TRENCH EXCAVATION

A. Excavation Method

The Contractor shall use a backhoe or excavator to dig the trench. A trencher type excavation machine may be used as approved by the District. In yards with sod or turf type surfaces, the operator shall take special care and remove excavated materials without removing additional turf beyond the trench.

B. Depth of Pipe

Minimum depth of cover over pipe shall be forty-eight inches (48") as measured from the final ground level to the nearest surface of the pipe. Greater depths will be required to make smooth transitions at points of abrupt changes in the ground surface. Extra depths may be required under highways, railroads, and streams. These extra depth conditions will conform to the requirements as shown on the drawings, and as required by other agencies involved.

C. Trench Width

The width of the trench shall be ample to permit the pipe to be laid and jointed properly, and the backfill to be placed and compacted as specified. Trenches shall be of such extra width, when required, as will permit the convenient placing of timber supports, sheeting and bracing and handling of fittings. Minimum trench widths are shown on the plans.

D. Shoring

Open cut trenches shall be sheeted and braced as required by any governing federal or state law, municipal ordinances, and as may be necessary to protect life, property, or the work. Where sheeting and bracing are used, the trench width shall be increased accordingly. Trenches shall be kept free from water and pipe shall not be laid in water or on soggy material.

Temporary support, adequate protection, and maintenance of all underground and surface structures, drains, sewers, and other obstructions encountered in the progress of the work shall be furnished by the Contractor at his expense and under the direction of his Engineer. Any structures that have been disturbed shall be restored upon completion of the work

E. Removal of Pavement

The Contractor shall remove pavement and road surfaces as a part of the trench excavation, and the amount removed shall depend upon the width of trench specified for the installation of the pipe and the width and length of the pavement area required to be removed for the installation of valves, specials, manholes, or other structures. The width of pavement removed along the normal trench for the installation of the pipe shall not exceed the width of the trench specified by more than 6" on each side of the trench. The width and lengths of the area of pavement removed for the installation of appurtenances shall be equivalent to those for the associated pipeline or 6" wider than the appurtenance (whichever is greater). Wherever, in the opinion of the District Inspector, existing conditions make it necessary or advisable to remove additional pavement, the Contractor shall remove it as directed by the District Inspector and shall receive extra compensation therefore, provided such additional work is not shown in the drawings or specified. The Contractor shall use such methods, such as drilling, chipping, or sawing as will assure the breaking of the pavement along straight lines. The face of the remaining pavement shall be approximately vertical.

F. Protection of Property

All excavated material shall be piled in a manner that will not endanger the work and that will avoid obstructing sidewalks and driveways. Hydrants under pressure, valve pit covers, valve boxes, curb stop boxes, fire and police call boxes, or other utility controls shall be left unobstructed and accessible until the work is completed. Roadway gutters shall be kept clear or other satisfactory provisions made for street drainage. Natural watercourses shall not be obstructed.

Trees, shrubbery, fences, poles, and all other property and surface structures shall be protected unless their removal is shown on the drawings or authorized by the District Inspector. When it is necessary to cut roots and tree branches, such cutting shall be done under the supervision and direction of the District Inspector.

G. Stream Crossing

When crossing watercourses greater than 15 feet in width, the following shall be provided per Missouri Department of Natural Resources:

1. Flowing Streams

a) Restrained joint pipe shall be used for open cut crossings and encased in a welded steel casing. Restrained joint pipe shall be used for bored crossings.

b) Valves shall be provided at both ends of water crossings so that the section can be isolated for testing or repair; the valves shall be easily accessible and should not be subject to flooding; a Water Sampling Station shall be installed at the valve closest to the supply source in an accessible location.

c) Water Sampling Stations shall have permanent taps on each side of the valve to allow insertion of a small meter to determine leakage and for sampling purposes.

d) The stream crossing pipe or casing shall extend at least 15 feet beyond the upper edge of the stream channel on each side of the stream.

2. Intermittent Flowing Streams

a) Restrained joint pipe shall be used for all stream crossings;

b) The pipe shall extend at least 15 feet beyond the upper edge of the stream channel on each side of the stream.

3. Culverts and Ditches

Waters lines under ditches, outflows of culverts, and other places which have or could exhibit severe cutting or erosion shall be encased as indicated in the drawings. Encasement shall be placed at such points as located on the drawings. The Engineer or District Inspector may require additional locations to be encased. Extra compensation will be allowed for such additional work.

H. Barricades, Guards, & Safety Provisions

To protect persons from injury and to avoid property damage, adequate barricades, construction signs, torches, red lanterns, and guards, as required shall be placed and maintained during the progress of the construction work and until it is safe for traffic to use the highway. All material piles, equipment, and pipe that may serve as obstructions to traffic shall be enclosed by fences or barricades and shall be protected by proper lights when the visibility is poor. Safety rules and regulations of local authorities shall be observed.

I. Maintenance of Traffic & Closing of Streets

The Contractor shall carry on the work in a manner that will cause the least interruption in traffic and may close to through travel not more than two consecutive blocks, including the cross street intersected. The Contractor shall provide suitable bridging over the trench where traffic must cross open trenches.

The Contractor shall post suitable signs indicating that a street is closed and necessary detour signs for the proper maintenance of traffic. All signage will meet the Manual of Uniform Traffic Control Devices (MUTCD). Adequate signage will be required in the Work Zone.

2.6 BEDDING

A. General

The bedding material shall be placed in the bottom of the trench prior to placement of the pipe. The bedding below the pipe shall provide continuous and uniform bearing for the pipe except at the bell or joints at which a hole shall be dug to prevent the end from bearing. From the bottom of the trench to a depth of one foot above the top of the pipe, the trench bedding shall be placed around the pipe by shovel slicing or other means so that voids are eliminated. Bedding material around the pipe shall be thoroughly tamped to provide uniform and continuous bearing. The material shall be consolidated to 90% Standard Proctor. The Contractor shall use special care in placing bedding material to avoid damage or movement of the pipe. Frozen material will not be allowed for bedding.

B. Poor Soil

Where the bottom of the trench at subgrade is found to be unstable or to include ashes, cinders, refuse, vegetable or other organic material, or large pieces or fragments of inorganic material that will not provide adequate long term support, the Contractor shall excavate any such unsuitable material. Replaced material in the overdig area shall be thoroughly compacted with acceptable earth excavation or granular material, as approved by the District Inspector.

C. Rock

Rock ½ inch or larger shall be not be used in the bedding.

2.7 BACKFILLING

A. General

Backfill material shall be placed above the pipe bedding to the top of the trench with excavated material. The backfill shall be neatly rounded over the trench to a sufficient height to allow for settlement to grade after consolidation to make the earth surface conform as nearly as possible to the original condition. Backfilling material shall be deposited in the trench for its full width on each side of the pipe, fittings, and appurtenances simultaneously. Backfilling by machine methods will be allowed, if overseen by laborers to watch for rock, improper backfill material, and damage to pipe.

The replacement of backfill material into the trench shall be accomplished by running equipment parallel to the trench. The process of running equipment perpendicular to the trench to push backfill into the trench is prohibited.

Laborers following behind the backfill operation shall be using a shovel to remove remaining small amounts of earth from turf so that the work areas (not the trench area) will be restored to their original condition the day the excavation occurs.

The Contractor may backfill with excavated material where backfill material is not indicated on the drawings or specified. If excavated material is unsuitable for backfill as determined by the District Inspector, the Contractor shall provide approved material to backfill the trench.

If the excavated material consists of sand or loam or clay which has been excavated in a manner to eliminate lumps or clods (e.g. excavation by a trenching machine), the trench may be backfilled by means of a road grader or similar device, which will gently roll the material into the trench by multiple passes parallel to the trench.

Where additional trench settlement occurs, refilling shall be required to bring the surface to conform to the adjacent ground.

B. Backfill under Permanent Pavement

Where the excavation is made through permanent pavements, curbs, driveways, or sidewalks, or where such pavements are undercut, the entire trench shall be backfilled to the subgrade of the pavement with sand or granular backfill material. Backfill shall be compacted to 90% of the maximum Standard Proctor for the material. Backfill in trench shall not exceed 8" lifts.

C. Backfill under Private Gravel Drives

Walks and driveways consisting of broken stone, gravel, slag, or cinders shall be backfilled and compacted with suitable excavated material. If excavated material is not suitable or as directed by the District Inspector, the trench shall be backfilled and compacted with 1" surface rock. The top 12" of backfill shall match the existing aggregate.

D. Backfilling around Structures

Compacted backfill will be required around valve boxes, fire hydrants and other items, which project to ground, surface to insure continuity of proper alignment.

E. Backfilling in Freezing Weather

Backfilling will not be allowed in freezing weather except as approved by the District Inspector. No fill shall be made where the material already in the trench is frozen, and in no instances shall frozen material be used in the backfill.

F. Excess Excavated Material

Excess excavated materials from trenches located in open fields shall be uniformly distributed within the construction limits. Excess excavated materials within streets, driveways, parkways, highways and roads not required for backfilling or grading shall be removed from the site.

3. PIPE, JOINTS AND FITTINGS

3.1 GENERAL

A. Each pipe shall be clearly marked indicating thickness class, net weight of pipe without lining, and name of manufacturer. The Certificate of Conformance shall in effect state the material is PVC 1120 and meets the requirements of ASTM D2241-65 or latest revision thereof.

B. The same type of joint shall be used throughout the project for a particular type of pipe, unless otherwise specified.

C. Pipe shall be installed according to the manufacturer's recommendations and these specifications.

3.2 REFERENCES

Gray Iron Castings for Valves, Flanges and Pipe Fittings	ANSI/ASTM A126
Rigid Poly Vinyl Chloride (PVC) Compounds	ANSI/ASTM D1784
Solvent Cements for Poly Vinyl Chloride (PVC) Plastic Pipe and Fittings	ANSI/ASTM D2564
Ductile Iron and Gray-Iron fittings	ANSI/AWWA C110
Elastomeric Seals (gaskets) for Joining Plastic Pipe	ASTM F477, D3139
Polyvinyl Chloride (PVC) Pressure Pipe	ANSI/AWWA C900, C905
Standard for Molecular Oriented Polyvinyl Chloride	AWWA C909
Practice for Making Solvent-Cemented Joints with Poly-Vinyl Chloride (PVC) Pipe and Fittings	ASTM D2855

3.3 PIPE

A. Ductile Iron Pipe	ANSI/AWWA C150/A21.50; C151/A21.51; C115/A21.15 Class 50, except as otherwise specified; cement lined and sealed meeting ANSI/AWWA C104/A21.4.
B. PVC Pipe	ASTM 2241 IPS pressure rated pipe, AWWA C900, AWWA 905, AWWA 909, Schedule 40 & 80 meeting ASTM D 1785 NSF Standard 14 and CSA Standard B137.3
C. PVC Restrained Joint Pipe	ASTM D2241, C900RJ, or C905RJ
Integral Bell	Machining matching grooves in the pipe and coupling or bell with a nylon spline inserted into the groove. Couplings may be used, only as approved by the District Inspector.
D. Polyethylene Service Pipe	ASTM D2239 and PE 3408, SIDR-7 pressure rated for 200 psi
Service Line Size	3/4" size short side connection to meter 1" size under roadways to meter 2" size under roadways to double meters
E. Copper Pipe	ASTM B88 "Type K" with no splice under pavement.
Coupling	

Copper to Copper	Ford pack joint
PE to Copper	Ford pack joint with stainless steel insert
PVC to Copper	Schedule 80 PVC Nipple 12 inches long inserted into the pack joint and the other end is coupled with a standard PVC rubber ring coupling.

F. Brass Pipe — ASTM B43 for red brass pipe

3.4 CASING PIPE

PVC Pipe

8 inch through 15 inch	SDR 26 per ASTM D3034, or ASTM 2241
18 inch through 27 inch	ASTM F789 PS 115, or equivalent pipe stiffness.
Joint	Bell and spigot meeting ASTM D3212 if open cut construction, or restrained joint pipe if bored.
Rubber Gasket	ASTM F477. Solvent weld or non-gasket friction joints are not acceptable.

Steel Pipe

Yield Strength	35,000 psi conforming to ASTM A53-B
Thickness	As defined in the project requirements or authorizing permit agency
Length	Random lengths of pipe may be used, but all ends must be V grooved-butt welded around the complete perimeter to adjacent pipe.
Welds	Water tight and equal to or stronger than pipe

HDPE Pipe	PE 3608/4710 DR 11 High Density Polyethylene meeting ASTM F 714, AWWA C906
Size	DIPS or IPS are acceptable based on the required clearance of the casing spacer, carrier pipe size and required minimum clearance as defined in this specification section.
Joint	ASTM D 3261 Heat Fusion in conformance to PPI-TR-2. Remove excess material (burrs) on outside of pipe. Remove inside burrs.

Fusible PVC Pipe	Fusible pipe to meet AWWA C900 and AWWA C905 based on pipe size
Pipe	ASTM 2241 or ASTM D1785, as applicable.
Size	As shown on the plans, or acceptable size based on the required clearance of the casing spacer, carrier pipe size and required minimum clearance as defined in this section.
Joint	Butt-fused heated joint, as required by manufacturer and in conformance to PPI-TR-2. Burst test of fused sections per

ASTM D1599. Remove excess material (burrs) on inside of pipe.

3.5 PIPE JOINTS

A. General

The coupling-joint system shall have been tested and approved by the National Sanitation Foundation and certification of said approval shall be submitted.

Pipe ends shall be clean and smooth. Pipe lengths shall be such that a space is left between pipe ends of not less than ¼ inch or more than 1 inch. Pipe shall have a ring painted around the spigot end in such a manner as to allow field checking of setting depth of pipe in socket.

If manufacturer's design is such that excessive homing of pipe is detrimental, then two rings shall be required to meet tolerances. Contractor shall back pipe up to maintain position required.

The manufacturer shall furnish drawings of the joint and gasket. The dimensions of the bell, socket, and plain end shall be in accordance with the manufacturer's standard design dimensions and tolerances. Such dimensions shall be gauged at sufficiently frequent intervals to assure dimensional control and satisfactory joint assembly.

No contaminated material or any material capable of supporting prolific growth of microorganisms shall be used for sealing joints. Packing material shall be handled in such a manner as to avoid contamination. Packing materials must conform to AWWA Standards.

B. PVC Pipe Joints

Push-on Joint	ASTM Spec D3139. Bell end shall have tapered socket to create an interference type fit, as defined in ASTM D2672
Gasket	Elastomeric Seals meeting ASTM F-477

C. Ductile Iron Pipe Joints

Mechanical Joint	ANSI/AWWA C111/A21.11. Mechanical joint ductile iron fittings shall be used for all pipe sizes greater than 2-inch. Oversize (transition) gasket for use in ductile iron fittings will be acceptable
Push-on Joint	ANSI/AWWA C111/A21.11, except gaskets shall be neoprene or other synthetic rubber. Natural rubber will not be acceptable.
Restrained Push-On Joint	Pipe with restrained push-on joint shall be capable of being deflected to 4° after assembly for pipes 12" in diameter and smaller. US Pipe TR Flex, Griffin Snap-Lok or approved equal.
Flange	ANSI/AWWA C110/A21.10, C115/A21.15, ANSI B16.1, B16.5
Steel Flange	U.S. Pipe "Flange-Type" ASTM C207
Bolt	ASTM A307 chamfered or rounded ends projecting ¼ to ½ inch beyond outer face of nut.
Nut	ASTM A307 hexagonal, ANSI B18.2, heavy semi-finished pattern

Gasket	ANSI/AWWA C111/A 21.11 and ASTM D1330, Grade I, red rubber, ring type, 1/8 inch thick; or U.S. Pipe "Flange-Tyte" 1/8 inch thick.
Packing Material	Yarning or packing material shall consist of molded or tubular rubber rings.

D. Uni-Flange Pipe Restraint

PVC Pipe Barrel	Ford Meter Box Co., Series UFRCS 1300
PVC Pipe Bell Joints	Ford Meter Box Co., Series UFRCS 1390

E. Ductile Iron Lugs — ASTM A 536 for ¾" rods.

3.6 FITTINGS

A. Ductile Iron Fittings

General	ANSI/AWWA C110/A21.10, and to be compact type meeting ANSI/AWWA C153/A 21.53; 350 psi rated
	Cement lined and sealed meeting ANSI/AWWA C104/A21.4, and bituminous coating for outside pipe per manufacturer's standard.
Sleeves/Adapters	
DI to DI	Mechanical joint solid sleeve
DI to Steel or galvanized	Mechanical joint solid sleeve with sleeve size changed to accommodate pipe OD.
DI to IPS	Mechanical joint solid sleeve with PVC transition gasket.
IPS to Steel	Mechanical joint solid sleeve
AC to IPS	Hymax 2000 as manufactured by Total Pipe Solutions, Inc.
Anchor Coupling (Swivel Gland)	Fast Fabricators, Inc., or equal. Used with tees and solid adapters.
Tapped Fitting	Threaded, tapered. Used on tees and plugs.

B. Brass Fittings — Ford Brass Fittings meeting ASTM B-62

Polyethylene To Brass	Ford Fitting - stab type compression fitting with Reverse Taper

C. Plastic Fittings

PR 200 (< 4" size)	ASTM D 3139 NSF approved and marked, and used only with Water District approval.
Schedule 40 & 80	ASTM D1784
Solvent Weld	ASTM D2467
Threaded End	ASTM D2464
Gasket Bell	ASTM D3139

D. Tapping Saddle

To Ductile Iron Pipe	Ductile iron with stainless steel wrap-around and rubber sealing gasket; 250 psi pressure rating
To Ductile Iron Pipe	

with Corp Stop	Ford Ductile Iron Saddle F202
To PVC Pipe	Ford Brass Saddle S71 for all sizes
To PE Pipe	Ford Brass Saddle S41

E. Tapping Sleeve

Material	Type 304 Stainless Steel
MJ outlet	One-piece casting having a plain end and a mechanical joint gland TIG and MIG welded a full 360 degrees; Type 304 Stainless Steel Flange.
Gasket	Mechanical Joint Outlet Gasket, Branch Sealing Gasket, and Complete Circle Gasket attached to the sleeve at the factory.
Drop-In Bolt	Square Neck Track-Head bolts with a minimum of two (2) longer starter bolts. Minimum quantity of drop-in bolts and mechanical joint outlet bolts per outlet diameter shown below.

Outlet Diameter (inch)	Drop-In Bolts (Quantity)	MJ Outlet Bolts (Quantity)
2	8	2
3	8	4
4	10	4
6	10	6
8	16	6
10 - 12	20	8
14 - 16	36	12

F. Polyethylene Wrap

Material	8-mil thick Class C (Black) conform to ANSI/AWWA C105
Adhesive Tape	2 inches wide and plastic backed, capable of bonding securely to metal surfaces and/or polyethylene material.

4. VALVES, STRUCTURES and APPURTENANCES

4.1 VALVES

Gate Valve	Encapsulated Wedge non-rising stem; triple "0" Ring Seal and conforming to AWWA Specification C509.
Joint	Mechanical joint with 200 psi design working pressure and have resilient seats.
Operator	2" square operating nut opening counter clockwise.
Coatings	Protective epoxy interior coating according to AWWA C550.
Setting	Set vertical and in true alignment where shown on plans and construction details
Butterfly Valve	Mechanical joint Rubber-Seated Butterfly Valves M & H style 450 & 4500 conforming to AWWA C504, or equal.
Operator	Horizontal hex shaft, underground operator with 2" nut; closure turns similar to like size gate valve

Coatings	Protective epoxy interior coating according to AWWA C550.
Ball Valve	Ford B-87, Ford B11 and Ford B-81 with C87 pack joint, or equal.
Body	There shall be top and port O ring seals, and top anti-friction washer and bottom low friction plastic bearing insert with screwed ends
Operator	Tee head with removable plug for in-line repair.
Optional Body	Bronze body with Tee head, double O ring stem seals, molded Bura N rubber port seals and ball seats, full round opening ball with screwed ends.
Corporation Stop	Ford F1100 meeting AWWA Specification C800-55. Corporation stops for service lines shall be size 3/4" x 3/4", unless otherwise specified.

4.2 VALVE BOX

Riser Pipe	6" PR 200 PVC
Cover	Clay and Bailey No. 2194 cover and ring

4.3 DETECTOR CHECK VALVE

A Watts Series SS07F detector check valve with by-pass meter shall be installed on private fire protection and automatic sprinkler systems, and installed in a structure as shown in the details. Valve and line size will be determined by the District.

4.4 FIRE HYDRANT

Fire hydrants shall be American Darling B-84-B-5, Clow Medallion, or Mueller Centurion No. 250. Hydrant shall be self-draining, non-rising stem, nozzle threads meeting National American Standard Fire Hose Specs with caps and no chains.

Fire hydrants shall be factory applied red paint, have operating threads that are sealed and lubricated, the 1½" pentagonal operating nut shall open counterclockwise.

Hydrants shall be set for standard pipe burial depth unless shown otherwise on the plans. The hydrant gate valve and barrel shall be vertical and plumb.

4.5 AUTOMATIC FLUSHING UNIT

Automatic flushing unit shall be Kupferle 9400-A or approved equal, and shall be constructed and meet the requirements as shown in the construction details.

4.6 CLEANOUT

Cleanouts shall be constructed as shown in the details. All cleanouts shall be connected to a gate or ball valve; have proper thrust blocking, be self-draining with weep hole and rock; the riser shall be set plumb and left approximately 2' above ground, where practical.

Temporary cleanouts for testing shall be constructed of the material and size of the new water line for purposes of pigging the line. Once completed the cleanout piping will be removed.

4.7 AIR RELEASE VALVE

Air release valves shall be installed in pits as shown on the plans. The air release valve shall be a combination air valve Model D-040 as manufactured by A.R.I., Model 202 as manufactured by Val-Matic or approved equal.

4.8 WATER SAMPLING STATION

Water sampling station shall be as manufactured by Kupferle or approved equal, which meets the following requirements.

Housing	HDPE meeting ASTM D1248 set 4" above grade;
Ultra-Violet Resistance	7-9 yrs meeting ASTM G-26-92
Cover	Lockable
Color	Neutral earth tone or green
Flammability	1.59 cm/min meeting ASTM D635
Sampling/Flow Meter	3/4" brass threaded hose nozzle outlet with iron spigot handle.
Port	All working parts to be brass; removable from above ground.
Above Ground Piping	Brass
Below Ground Piping	48" burial depth of sampling pipe. Sampling pipe to be inside brass frost jacket. Above ground draining system for sampling pipe to prevent freezing.
Connection to Main	¾" Ford F1100 Corp Stop connection to Main ¾" PE service line from main to sampling pipe

4.9 SERVICE METER & PIT

Pit Setter	Ford Plastic PFBHC-248-18-28 for ¾" service (short-set) Ford Plastic PFBHC-288-18-28 for 1" service (road crossings)
Dimensions	18" inside diameter, 30" pit depth
Lid	Ford 2380-01-1012
Ring	Ford 2210-01-6050
Meter	Neptune Model T10 AMR

5. INSTALLATION

5.1 PIPES, FITTINGS, AND STRUCTURES

Pipe shall be of sizes indicated on the drawings and laid to the lines indicated thereon, in accordance with these specifications

Pipe interiors shall be thoroughly cleaned of all foreign matter before lowering into trench.

All pipe, fittings, valves, hydrants, and accessories shall be carefully lowered into the trench with suitable equipment in a manner that will prevent damage to pipe and fittings. Under no circumstances shall pipe or accessories be dropped or dumped into the trench.

All ductile iron materials shall be wrapped in a polyethylene encasement.

A. Pipe Placement

Each section of pipe shall rest upon the pipe bedding for its full length with recesses excavated at joints. Bell holes for pipe 8 inches and larger shall be excavated by hand. Any length that has had its line, grade or joint disturbed after laying shall be taken up and relayed. Under no circumstances shall pipe be laid in water nor when trenches or weather conditions are unsuitable for such work, unless otherwise directed by the District Inspector. Any section of pipe already laid but found damaged or

defective shall be replaced with new pipe at no additional expense to the Owner. Any pipe that has floated shall be re-laid, or as directed by the District Inspector.

Pipe shall be cut square by the aid of miter box, when field cutting pipe. The cut end which will be inserted into a socket shall be beveled with a milled curved-tooth flat file or other approved device. A factory pipe end shall be used as a guide to determine the bevel. Mark a stop guide on the pipe by use of a pencil or crayon to provide visual observation for proper insertion depth.

A rubber gasket shall be placed in the annular recess of the pipe or fitting socket with a lubricant that is water-soluble, non-toxic, non-objectionable in taste and odor, non-supportive of bacteria growth, and have no deterioration effect on the PVC or rubber gaskets. Lubricant containers shall be labeled with the trade name or trademark of lubricant manufacturer or pipe manufacturer. The lubricant shall be suitable for use in potable water. It shall be delivered to the job in enclosed containers and shall be kept clean.

The plain end adjoining pipe shall be thrust into the pipe socket, compressing the gasket uniformly around the pipe to form a positive seal. The gasket and the annular recess shall be so designed and shaped that the gasket is locked in place against displacement as the joint is assembled. Details of the joint design and assembly shall be in accordance with the joint manufacturer's standard practice.

Pipe may be furnished with a socket as an integral part of each piece of pipe or a coupling type socket with rubber gasket on each side may be provided. Ends of pipe intended to be inserted into a socket shall be factory beveled.

Pipe shall be kept clean after placement in the trench. Precautions shall be taken to protect pipe interiors, fittings, and valves against contamination. Pipe delivered for construction shall be strung so as to minimize entrance of foreign material. When pipe laying is not in progress, as, for example, at the close of the day's work, all openings in the pipeline shall be closed by water tight-plugs. Joints of all pipe in the trench shall be completed before work is stopped. Enough backfill shall be placed over the pipe to prevent flotation. If water accumulates in the trench, the plugs shall remain in place until the trench is dry.

Dirt entering the pipe that will not be removed by the flushing operation, as deemed by the District Inspector, shall be cleaned and swabbed with a 5 per cent hypochlorite disinfection solution, as necessary.

B. Pipe Joint Deflections

Maximum angular joint deflection is shown in the table. Fittings are required if the pipe deflection is exceeded.

Maximum Allowable Bending Radius and Joint Deflection for PVC Pipe

Pipe Type	Pipe Size (in)	Minimum Laying Radius (foot)	Offset per 20 ft Section of Pipe (Inch)
ASTM 2241	2	50	47
	3	75	32
	4	95	25
	6	140	17
	8	180	13
	10	225	11
	12	270	9
	16	355	7
AWWA C900/C905	4	125	19
	6	180	13
	8	235	10
	10	290	8
	12	345	7

Maximum Allowable Bending Radius and Joint Deflection for PVC Pipe

Pipe Type	Pipe Size (in)	Minimum Laying Radius (foot)	Offset per 20 ft Section of Pipe (Inch)
	16	452	5

The following table shall be used in determining the minimum radii for restrained joint pipe used in open cut and directional boring installations.

Maximum Allowable Bending Radius and Joint Deflection for PVC Restrained Pipe

Pipe Type	Pipe Size	Minimum Laying Radius (foot)	% Change in Pitch per 10'
All PVC and Fusible PVC	2	75	7.6
	3	100	5.7
	4	125	4.6
	6	200	2.9
	8	250	2.3
	10	300	1.9
	12	375	1.5
	16	500	1.1
	18	550	1.0
	20	625	0.9
	24	650	0.88

The minimum bending radii for HDPE pipe is based on the dimension ratio (DR) as follows:

Minimum Bend Ratio for HDPE Pipe

Dimension Ratio (DR)	Bend Ratio (α)
9	20
11	25
13.5	25
17	27
21	27
26	34

Minimum Radius = α times Pipe OD in feet

5.2 POLYETHYLENE WRAP (POLYWRAP)

Ductile iron pipe, fittings, valves, valve boxes and appurtenances shall be encased in 8-mil thick polyethylene according to ANSI/AWWA C105/A21.5. Although the polyethylene encasement should prevent contact between the pipe and surrounding backfill and bedding material, it is not intended to be completely airtight or watertight.

All lumps of clay, mud, cinders, or other materials that might be on the pipe surface should be removed prior to installation of the polyethylene encasement. Care should be taken to prevent soil or bedding material from becoming trapped between the pipe and the polyethylene.

The polyethylene film should be fitted to the contour of the pipe to affect a snug, but not tight, encasement with minimum space between the polyethylene and the pipe. Sufficient slack should be provided in contouring to prevent stretching the polyethylene when bridging irregular surfaces, such as bell-spigot interfaces, bolted joints, or fittings, and to prevent damage to the polyethylene during

backfilling operations. Overlaps and ends should be secured with polyethylene-compatible adhesive tape, tape at least every 4 feet.

For installation below the water table, both ends of the polyethylene tube shall be sealed as thoroughly as possible by wrapping circumferentially with adhesive tape or strapping at each joint overlap.

5.3 LOCATOR WIRE

Wire	Kris-Tech Wire PE-45 #12, or approved equal solid blue wire.
Splices/Connections	Kris-Tech Splice Kit 3M-DBR-Part Number – 054007-09964.

Locator wire shall be in at least 1,500-foot rolls and installed in such a manner to keep splices to a minimum. Rolls of 500 feet are only acceptable on jobs of less than 500 feet in length. Splices shall ONLY be made in valve boxes or locator wire splicing boxes.

Locator wire shall be taped to the top of all pipe installed including service lines. Locator wire at valve boxes shall be taped to the outside of the riser pipe; a hole or slot cut into the riser pipe to bring the wire into the pipe; and, enough wire spooled in the valve box to extend 24" outside the valve box.

Locator wire installation and signal loss shall be included under the 1-year pipe and workmanship warranty.

5.4 TAPPING SLEEVES

The branch opening shall be larger in diameter than nominal to allow the use of a full-size cutter. All welding shall be passivated to return the welded stainless steel to its original corrosion resistant state. There shall be no paper or plastic adhesive labels attached to the tapping sleeve, any information appearing on the sleeve shall be stenciled. The tapping sleeve shall be factory hydrostatically tested on pipe to verify proper fit and weld integrity with zero leakage allowed. The tapping sleeve shall be air tested to 50 psi prior to making the tap.

5.5 TAPPING SADDLES

If tapping saddles are installed on pipe containing polywrap, first place 3 wraps of polyethylene adhesive tape around pipe and then tap through tape and poly film. Repair any damage to wrap with tape and extra film as per ANSI/AWWA C105/A21.5. Remove material where saddle gasket touches pipe adjacent to hole.

After tap has been made, wrap & tape service line to 3 feet from main line and encase saddle with wrap & tape to 1 foot each sidesaddle on main line. Protect saddle & service line in this fashion regardless of whether main line has been encased with polywrap. Use sintered teflon pipe dope or TFE tape on all screw threads. Any saddle placed on ductile iron pipe shall be poly wrapped and taped to 1 foot each side of saddle.

When using a 2" Ford Ball Corp with pack joint on outlet, use sintered teflon pipe dope or TFE tape on all screw threads from main line.

5.6 TIEBACK RODS

A. General

Tieback rods are required wherever the continuity of restraint has been made discontinuous by use of a coupling. Tieback rods shall be used to hold assemblies together, such as at a tee which has a valve located on one or various sides, and at other locations where pipe restraint is required to prohibit movement.

Tieback rods shall be stainless steel all-thread 3/4" diameter rods with stainless steel 1-1/4" outside heavy hex nuts on both sides of fittings, bolt holes, etc. Use of more or larger tiebacks will be indicated on plans, if required. The number of rods is dependent upon the pipe size and the normal operating water pressure in the line.

The Water District will determine the normal operating water pressure. Operating pressure is normally less than 160 psi.

Number of Tie-back Rods
vs. Pipe Size

Pipe Size	Operating Pressure ≤160 psi	>160 psi
4" & Smaller	2	2
6" - 8"	4	6
10" - 14"	6	8
16" - 18"	8	10
20" - 24"	12	16

B. Installation

The rods shall be run through the bolt holes in fittings, valves, etc. Both sides of all flanges shall be bolted. Double nuts are required for pipe sizes that are 8" and larger, or require more than 4 rods. Where possible, use an Anchor Style Fitting on one end when a group of fittings occurs at one location.

Ductile iron lugs may be used for assemblies up to and including 8" pipe size.

Rods may be slightly bowed to traverse around the body of some devices. Rods may be added which hook into said holes so that rods may remain straight. Anchor straps, socket clamp assemblies, etc. may be used by the contractor in his normal procedures.

When installing tieback rods with concrete reaction blocks adjust nuts after concrete has set.

C. Exceptions

1. In cases where tieback rods require lengths greater than 4', uni-flange pipe restraints may be used, as directed by the District Inspector.

2. When piping is mounted on prefabricated skids, connection of piping to skids may be used in lieu of tieback rods.

5.7 CONCRETE THRUST BLOCKING

Concrete thrust blocking shall be used at all bends, tees, end caps, and at other locations requiring pipe restraints. Thrust blocks must be placed against undisturbed earth.

Thrust blocks shall be constructed of 3,000 psi commercial redi-mix concrete with a slump no greater than 6-inch.

Prior to pouring concrete, polyethylene wrap shall be placed around valves, fittings, bolts and all-thread rods to keep concrete separated from pipe and fittings. Duct tape to hold plastic in place may be used. Water District to approve thrust blocking forms prior to placement of concrete.

A. Horizontal Thrust Blocks

The bearing area is the face dimension that is located against unexcavated earth on the back side of the trench. The height and width face dimensions shall be established in the field meeting the bearing area shown in the table in the plans. The centerline of the face dimensions shall be located at the centerline of the pipe in both the horizontal and vertical directions.

When fittings and valves have been connected by tieback rods to form one continuous unit, the entire aggregated system may be treated as one for the purpose of concrete thrust blocking. The contractor may reduce concrete reaction blocking requirements, as approved by the District Inspector.

B. Vertical Thrust Blocks

The concrete required to restrain vertical bends is shown in the table on the plans.

C. Concrete Restraining Blocks

Concrete restraining blocks, sometimes called a deadman or cross blocking, shall be anchored to a valve or fitting with the same size and number of tieback rods as defined for tieback rods.

D. Reinforcing Steel

Reinforcing steel bars	ASTM A 615 or A 706 Grade 60 deformed billet steel
Welded Wire Reinforcement	ASTM A 185 and be furnished in sheets
Tie Wire	16 gauge minimum, soft annealed

6. PIPE BORING

6.1 GENERAL REQUIREMENTS

Borings shall meet all requirements set forth by the permit issued by the appropriate jurisdiction. Contractor shall obtain necessary permits and do all work in accordance with their requirements.

6.2 CASING AND SPACER DATA

The Contractor shall submit shop drawings for the casing pipe and spacers. The spacer shall be sized to ensure that the bell of the carrier pipe does not touch the casing. The casing shall have at least a 1-1/2" clearance between the outside diameter of pipe with the casing spacer attached and the casing pipe. Contractor's supplier shall show compatibility of casing size with spacer design.

SPACER DATA		
Pipe Size	Max. Skid Spacing	Spacer Width
(inch)	(feet)	(inch)
4	4½	6
6	6	6
8	7	8
10	8½	8
12	9½	8
16	10	8

A. Spacer Materials

Totally non-metallic constructed of preformed sections of high-density polyethylene. Spacers shall be ISO 9002 certified for strength and quality. RACI casing spacers are the only approved brand.

B. End Seal

1/8" synthetic rubber wrap around with ½" stainless steel banding straps. Advanced Products Model AW has been approved.

C. Lubrication

Flux soap or drilling mud.

D. Installation

Casing spacers shall have a minimum number of projections around the circumference totaling the number of diameter inches.

Casing spacers shall be fastened tightly to the carrier pipe so that the spacers do not move during installation with double backed tape. Tool recommended for installation by the manufacturer shall be used during installation. Lubricate the spacers at time of installation.

6.3 CASING INSTALLATION

Casings may be installed by boring or open cut methods as is required. Casing shall be installed as boring equipment removes material from hole. Contractor may use larger casing size, but shall be responsible for any related modifications as a result.

Joining procedures must be such that concentricity of the entire completed casing will be maintained, and that the line and grade of the carrier pipe will be continuously straight. A full circle must be seen to prove that the casing is concentric from end to end by the lamping method of inspection.

The burial depth of the carrier pipe inside the casing shall be 48" below the lowest level of surface being crossed, except as specifically shown on the plans or defined by the governing jurisdiction. The casing may be lowered to avoid vertical bends.

The entire casing shall be installed and inspected before any pipe is inserted into the casing.

Contractor shall complete bore before other work is started so that slight misalignments in connecting pipes can be adjusted.

6.4 PVC CARRIER PIPE INSTALLATION IN CASING

1. All carrier pipes shall have restrained joints.
2. Pipe may be installed by using drawn cable or jacking. The force used to install the pipe must spread over the pipe end on which it bears, by use of a flat piece of wood or other similar force sustaining material.
3. No less than twenty foot long sections of pipe shall be used to minimize the number of joints within the casing.
4. It will be unnecessary to use restrained joint pipe if the casing is shorter than the carrier pipe. Also, the pipe may be laid directly on the casing without the use of spacers.
5. On 4" and larger pipes, a MJ sleeve, a fitting or valve shall be installed on either side of the casing.
6. On pipes smaller than 4", a PVC repair style coupling may be installed on either side of the casing, in lieu of a ductile iron sleeve.
7. Bores under roadways and creeks where encased or not shall have two separate strands of locator wire attached to the waterline that runs from isolation valves on either side of the bore as terminal points for the extra wire.

6.5 DIRECTIONAL BORING

A. General Requirements

Directional bores shall be completed using a directional boring machine supplied with an output signal to allow the Contractor to track the location of the drill head at all times. Size of drilling equipment shall be adequate for the job, but not grossly oversized such that an undue amount of thrust or torque is placed on the carrier pipe. Drilling fluids shall be selected for the site specific soil and ground water conditions. Confine free flowing (escaping) slurry or drilling fluids at the ground surface during pullback or drilling to prevent damage or hazardous conditions in surrounding areas. Remove all residual slurry from the surface and restore the site to pre-construction conditions. Fully repair any and all bore/relief pits constructed, including vacuuming drilling fluids and compacting disturbed earth.

All pipelines provided in the restrained joint area shall be installed to a minimum depth of 6 feet under creeks and 10 feet under river crossings, unless shown otherwise on the plans. All work associated with installing restrained joint pipe in the designated areas and, if crossing wetlands, creeks, rivers, streams or other waterways, shall conform to all permit requirements and to State and federal regulations.

Restrained joint areas depicted on the drawings are not to be considered exact and represent the

general length of the restrained joint pipe. The actual length of the restrained joint area will be determined in the field by the District Inspector, and may differ from that shown on the drawings.

B. Execution

A pilot hole shall be bored first, with an angle of entry not to exceed 20% grade from the horizontal, and proceed under the obstacle being crossed while maintaining the required soil. The pilot hole shall extend to the point of exit no shallower than 8 feet from the surface on a grade not to exceed 20%, unless shown otherwise on the Plans. The carrier pipe shall be restrained joint PVC pipe, unless otherwise shown on the Plans.

The carrier pipe shall be assembled on the exit side of the bore, and installed by back reaming in the reverse direction. Deviations from this method shall be approved by the District Inspector. The pull section shall be adequately supported during pullback. Pipe should not drag on the ground. Above-ground pipe assembly shall be checked for suitability of installation before pullback. The borehole shall be reamed to approximately 1.2 times the outside diameter of the carrier pipe. Use sufficient drilling fluids and monitor pullback pressure to detect any problems before heaving of the bore path surface occurs. Maintain the minimum cover required as shown on the plans.

A swivel shall be used when back reaming to prevent rotational torque (torsion) on the carrier pipe. Carrier pipe to be capped as necessary to prevent drilling fluids from entering.

Provide long-body transition couplings and reducers as necessary to complete the connection to the adjoining pipe. The Contractor shall provide the required depth of cover over the pipe upon tying in the restrained joint pipe with the adjoining pipeline.

All bore/relief pits constructed including vacuuming drilling fluids shall be backfilled.

C. Installation Alignment Record Data

Trace bore path by interpretation of electronic signals sent by a monitoring device. If a District Inspector is present, identify the cutting head location after each push to confirm that the bore will meet the proper horizontal and vertical alignments.

In addition to the electronic locator of the drill head, the Contractor shall keep a record of the location after each rod push. Data shall include the following, as appropriate:

Rod	number
Length	foot
Depth	foot
Offset (L/R)	foot
Pitch	percent grade

Submit to the Engineer a print out of the bore path for accurately determining the boring profile and to exhibit that sufficient cover was achieved during the bore. The bore path printout must be submitted prior to final pay request

7. TESTING OF PIPELINE

7.1 FIELD INSPECTION

The Engineer may perform various tests at times that he deems necessary, including pressure tests with his own equipment. Joints may be cut out of the pipeline for inspection and testing. This does not imply that indiscriminate cutting of joints will be allowed. Pipe may be cut at such times to facilitate such tests and the Contractor shall perform such cuts and repairs as requested.

Pipes, fittings, valves, hydrants, and accessories shall be inspected for defects prior to placement into the trench. Any defective, damaged, or unsound material shall be repaired or shall be removed from the site.

7.2 WATER FOR TESTING

It is the Contractor's responsibility to provide the water for testing. With District approval, Contractor may tap an existing waterline with the proper tapping materials to obtain water at the site. Upon completion of the need for water, Contractor will remove all connecting pipe to the corporation stop and close the corporation stop fully.

7.3 LINE CLEANING

To insure that lines are clean prior to disinfection, a polyethylene pig swabbing device shall be run through the line. The pig shall be sized for the specific size of the pipe, and shall be provided by the Contractor. The Contractor may do the line cleaning in segments as suits his construction methodology. The pipe segments shall be subdivided to facilitate practical lengths of line cleaning, or as directed by the Water District.

Contractor shall install and remove all temporary connections and devices required to insert the pig, provide adequate water for flushing, and removal of the pig upon completion.

The cleaning of some lines may be waived if the District Inspector feels that the pipe installed is clean and free of foreign matter.

7.4 DISINFECTING NEW WATER MAINS

Disinfection of Water Mains shall be in accordance with the latest edition of AWWA C651.

A. Flushing Requirements

The main shall be flushed with potable water prior to disinfection until discolored water, mud, and debris are eliminated. The flushing velocity should be at least 2.5 ft/sec. The rate of flow required to produce this velocity in various diameters is shown in the table below. No site for flushing should be selected unless it has adequate drainage.

Pipe Size	Flow Required to Produce 2.5 fps Velocity
In.	gpm
4	100
6	220
8	390
10	610
12	880

B. Forms of Chlorine for Disinfection

1. Liquid Chlorine

   Inject with a solution feed chlorinator and a water booster pump. Use an experienced operator and follow the instructions of the chlorinator manufacturer.

2. Calcium Hypochlorite (Dry)

   Dissolve in water to a known concentration in a drum and pump into the pipeline at a metered rate.

3. Sodium Hypochlorite (Solution)

   Dilute in water to desired concentration and pump into the pipeline at a metered rate.

C. Disinfection by Continuous Feed Method of Chlorine Application

This method is suitable for general application. Water from the existing distribution system or other approved sources of supply shall be made to flow at a constant, measured rate into the pipeline. The

water shall receive a dose of chlorine, fed at a constant, measured rate. The two rates shall be proportioned so that the chlorine concentration in the water in the pipe is maintained at a minimum of 50 mg/L available chlorine.

To assure that a proper concentration is maintained, the chlorine residual should be measured at regular intervals in accordance with the procedures described in the current edition of "Standard Methods and AWWA M12-Simplified Procedures for Water Examination".

The amount of chlorine residual required for each 100 ft of pipe of various diameters is shown on the table below. Solutions of 1 per cent chlorine may be prepared with sodium hypochlorite or calcium hypochlorite. The latter solution requires approximately 1 lb of calcium hypochlorite in 8.5 gal of water.

Chlorine Required to Produce 50 mg/L
Concentration in 100 ft of Pipe

Pipe Size	100 percent Chlorine	1 percent Chlorine Solutions
(Inch)	(Lbs)	(Gal)
4	0.027	0.33
6	0.061	0.73
8	0.108	1.30
10	0.170	2.04
12	0.240	2.88

During the application of the chlorine, valves shall be manipulated to prevent the treatment dosage from flowing back into the line supplying the water. Chlorine application shall not cease until the entire main is filled with the chlorine solution. The chlorinated water shall be retained in the main for at least 24 hr, during which time all valves and hydrants in the section treated shall be operated in order to disinfect the appurtenances. At the end of this 24 hr period, the treated water shall contain no less than 25 mg/L chlorine throughout the length of the main.

D. Final Flushing

After the applicable retention period, the heavily chlorinated water shall be flushed from the main until the chlorine concentration in the water leaving the main is no higher than that generally prevailing in the system, or less than 1 mg/L. Chlorine residual determination shall be made to ascertain that the heavily chlorinated water has been removed from the pipeline. De-chlorination of heavily chlorinated water shall be completed in accordance with AWWA C651 with de-chlorinating chemicals.

E. Bacteriologic Testing

At least twenty-four (24) hours after final flushing, bacteriologic sample(s) shall be collected from the end of the line, or other points as required by the District Inspector, and tested for bacteriologic quality and shall show the absence of coliform organisms. The samples collected shall be delivered by Contractor to a certified laboratory within 24 hours of obtaining the samples.

If the number and frequency of samples is not prescribed by the public health authority having jurisdiction, at least one sample shall be collected from chlorinated supplies where chlorine residual is maintained throughout the new main. In the case of mains exceeding 3000 ft, it is desirable that samples be collected midway along the length of the line as well as at its end. If the initial disinfection fails to produce satisfactory samples, disinfection shall be repeated until satisfactory samples have been obtained. When the samples are satisfactory, the main may be placed in service.

Two consecutive passing tests are required to demonstrate successful disinfection. The Contractor shall re-chlorinate the pipeline segment that is being tested after three bacteriological tests have failed.

Contractor shall incur all costs of sampling and supplying the District with a copy of test results.

7.5 DISINFECTION AFTER CONNECTION/REPAIR TO EXISTING WATERLINES

The procedures outlined in this section apply primarily when mains are wholly or partially dewatered. Leaks or breaks that are repaired with clamping devices while the mains remain full of water under pressure present little danger of contamination and require no disinfection.

A. Trench Chlorination

When an old line is opened, either by accident or by design, the excavation will likely be wet and badly contaminated from nearby sewers. Liberal quantities of hypochlorite applied to open trench areas will lessen the danger from contamination.

B. Swabbing with Hypochlorite Solution

The interior of all pipe and fittings used in making the repair (particularly couplings and tapping sleeves) shall be swabbed with a 5 per cent hypochlorite solution before they are installed.

C. Slug Method for Chlorination

In addition to the procedures above, a section of main in which the break is located shall be isolated, all service connections shut off, and the section flushed. The pipeline will be chlorinated with a highly concentrated dosage as high as 500 mg/L with the contact time reduced to at least 30 minutes.

D. Flushing

Flushing shall be started as soon as the repairs are completed and continued until discolored water is eliminated. The line shall be flushed from both directions, as directed by the District Inspector.

E. Bacteriological Testing

Bacteriologic samples shall be taken at the end of the line in the direction of flow. If the direction of flow is unknown, samples shall be taken on each side of the main break.

7.6 LEAKAGE TESTING

A. Preparation of Waterline

Contractor shall perform a hydrostatic test of the new waterline. Prior to the test, Contractor shall verify that test section is fully isolated, and that all air has been expelled from the pipeline to the satisfaction of the District Inspector. This may be accomplished by means of air relief valves, blow-off valves, hydrants or other means. If required, taps shall be made at high points where air relief valves are not called for on the plans. Such taps shall be plugged after testing is complete. Corporation stops should be installed before this test, if possible.

B. Equipment

Contractor shall provide all necessary water, piping, pumps, gauges (face divisions of 2 psi or less) and fittings for testing.

C. Testing Pressure

Generally, the test pressures for PR 200 PVC and PR 250 PVC are 160 psi and 200 psi, respectively. District Inspector will verify lowest elevation within the section of piping to be tested, and determine the test pressure and the testing location. Apply a test pressure equal to the design pressure of the pipeline at the lowest point of the alignment. After the specified pressure has been reached, the pump shall be stopped and all pipe, fittings, valves, hydrants, joints, and appurtenances examined for leaks.

Any visible leaks shall be repaired. After visible leaks are repaired, the pipeline shall be refilled with water and re-pressurized to the design pressure of the pipeline. This pressure shall be maintained for a period of four hours.

D. Allowable Leakage

A container of water shall be attached to the distribution line in a manner to allow the water in the container to flow into the pressurized lines. Water loss in the container shall be measured after the test and acceptability of the line shall be based on the following formula for a leakage allowance of 10.5 gallons per inch diameter per mile per day:

$$L = \frac{NxDx\sqrt{P}}{74{,}000}$$

Where: L = Allowable Leakage in gallons per hour
N = Number of joints in line being tested
D = Nominal pipe diameter in inches
P = Average test pressure in psi

Allowable Leakage per 1000 ft in gal per hr				
Test Pressure (psi)	Pipe Size (inch)			
	4	6	8	12
150	0.34	0.50	0.65	0.95
160	0.35	0.51	0.67	0.99
170	0.36	0.53	0.69	1.02
180	0.37	0.54	0.71	1.05
200	0.39	0.57	0.75	1.10
220	0.41	0.60	0.78	1.16

8. SITE RESTORATION

8.1 CLEAN UP

Final cleaning up shall be completed as soon as practical. All surplus water main materials furnished by the Contractor and all tools and temporary structures shall be removed from the site by the Contractor. All dirt, rubbish, and excess earth from the excavation shall be hauled to a dump provided by the Contractor and the construction site left clean to the satisfaction of the Engineer or District Inspector. All surplus water main materials furnished by the Owner and delivered to the site by the Contractor shall be removed and delivered by the Contractor to a location designated by the Owner. All surplus water main material furnished and delivered by the Owner shall be removed by the Owner.

Brush and trees removed from right-of-way easement for water line installation shall be removed from property or burnt, unless in accordance with District Policy the landowner has given Water District a written request for brush to be piled and left for landowners use.

The District Inspector may require the Contractor to rework the cleanup immediately in areas where neglect is causing a nuisance. The Engineer or District Inspector shall be the sole judge of nuisance. Nuisance may result from a lack of improper workmanship at the time of pipe installation, or due to forces of nature after pipe has been installed. The notice shall be in writing and the re-cleanup shall be accomplished in 2 weeks from said notice. Cleanup, so notified to be done and remaining undone after 2 weeks may be hired done by others and the cost deducted from monies due the Contractor.

If any pavement, trees, shrubbery, fences, poles, or other property and surface structures have been damaged, removed, or disturbed by the Contractor, whether deliberately or through failure to carry out the requirements of the Contract Documents, state laws, municipal ordinances, or the specific direction of the Engineer or District Inspector, or through failure to employ usual and reasonable safeguards, such property and surface structures shall be replaced or repaired at the expense of the

Contractor. These damaged items shall be replaced, repaired or restored to a condition equal to that before the work began.

All completed lines shall be returned as nearly as possible to the original condition, including seeding or sodding, as necessary.

The Contractor shall restore all pavement, sidewalks, curbing, gutters, shrubbery, fences, poles, or other property and surface structures removed or disturbed as a part of the work to a condition equal to that before the work began, and shall furnish all incidental labor and materials. No permanent pavement shall be restored unless the condition of the backfill is such as to properly support the pavement, and until approved by the Engineer or District Inspector. There will be no extra compensation for this work unless identified in the pay items.

8.2 REVEGETATION

A. Grading and Base Preparation
Earthwork shall conform to the lines and grades as shown on the plans. Grading shall provide positive drainage and a neat appearance conforming to the surrounding area. The area shall be tilled by disking or harrowing and all clods, lumps, etc. broken to a size to allow future mowing. Broken concrete, rubble, stones, roots, debris or other unsuitable material shall be removed. All disturbed areas shall be finished with at least 2-inches of topsoil.

B. Fertilizer and Lime
Fertilizer shall be a standard commercial 12-12-12 product which, when applied at the proper rate, will supply the quantity of total nitrogen (N), available phosphoric acid (P_2O_5), and soluble potash (K_2O), as specified. Submittals shall be provided for approval on all fertilizer used on the project. Material may be accepted on the basis of bag label analysis or supplier's certification.

Fertilizer Application Rates:

Temporary seeding	400 pounds per acre.
Permanent Seeding:	
Lawn Area	200 pounds per acre
Non-Lawn Area	300 pounds per acre

Lime shall be applied in Non-Lawn areas at a rate of 50 pounds per 1,000 sq feet or as determined by a soil test.

C. Sodding
Lawns established in zoysia grass that are stripped of vegetation will be replaced with zoysia sod. Seeding will not be permitted.

D. Temporary Seeding
Temporary seeding is required within 30 days of the installation of the water line and backfilling. The following procedures shall be taken.

1. Remove foreign materials, plants, roots, stones, and debris from the disturbed area. Do not bury foreign material. Remove contaminated subsoil. Using suitable excavated material, mound backfill over the trench to allow for settlement.
2. Apply the following temporary grass seed mix at the specified rate

Spring Planting Season		Fall Planting Season	
Lawn Area	Rate		Rate
Oats or Rye *	60 lb/ac	Winter Wheat or Rye	60 lb/ac

Non-Lawn Area

Oats, Barley, Rye, Red Clover, or Creeping Fescue	60 lb/ac	Winter Wheat or Winter Rye	60 lb/ac

* Other quick growing grain seed may be approved for use.

3. Apply fertilizer three weeks after seeding.
4. Reseed areas within 30 days of initial seeding where no stand of grass has occurred.

E. Final Seeding

Contractor shall seed only when soil and climatic conditions are such as to insure plant growth. Submittals shall be provided for approval on all grass seeds used on the project. Seed shall meet all requirements of the Missouri Seed Law for 99% Pure 85% germination.

4. Till the seeding area at least 3 inches deep. Remove foreign materials, plants, roots, stones, and debris from the disturbed area. Add suitable material to areas that settled excessively.
5. Spread 2 inches of topsoil over the area. Rake until the surface is smooth and level with the surrounding ground
6. Apply fertilizer at least one week before seeding. Work the fertilizer into the topsoil.
7. Apply the following permanent grass seed mix at the specified rate.

Lawn Area	Rate	Non-Lawn Area	Rate
Falcon IV or Major	200 lb/ac	Bromegrass	30 lb/ac
Oats *	100 lb/ac	K-31 Fescue	200 lb/ac
		Winter Wheat	100 lb/ac

* Other quick growing seed may be approved for use.

The Contractor shall be responsible for the growth of the seeded area. Any portion of the seeded area that is not in good growing condition at the end of thirty (30) days shall be reseeded as specified above.

F. Mulch

Apply mulch over the seeded areas at a rate of 1 ton per acre. The vegetative mulch shall be cereal straw from stalks of oats, rye, wheat, or barley. The straw shall be free of prohibited weed seeds as stated in the Missouri Seed Law, and shall be relatively free of all other noxious and undesirable seeds. The straw shall be clean and bright, relatively free of foreign material, and be dry enough to spread properly.

All mulch shall be distributed evenly over the area to be mulched within 24 hours following the seeding operation. Following the mulching operation, precautions shall be taken to prohibit foot or vehicular traffic over the mulched area. Any mulch which is displaced shall be replaced at once, but only after the work preceding the mulching which may have been damaged as a result of the displacement has been acceptably repaired.

Mulch placed on embankments steeper than 2-1/2:1 will need to be tacked or punched in.

Mulch is intended to reduce erosion during rain events. In the event there is too little mulch or heavy rains occur, whereby the seeded area erodes resulting in rivulets and other irregularities of the ground surface, the area will be re-graded with added topsoil, re-fertilized, re-seeded, and re-mulched.

END OF SECTION

TYPICAL CONSTRUCTION DETAILS
TABLE OF CONTENTS

No.	Detail
1	Pipe Trenching
2	Thrust Blocking
3	Concrete Restraining Block
4	Tieback Rod & Hairpin Rebar
5	Locator Wire
6	Gate Valve
7	Fire Hydrant
8	2" Connection to Main
9	End Cleanouts
10	End Cleanout at Tee or Cross
11	Side Cleanouts
12	Auto Flush Unit
13	1" Service Line Roadway Crossing
14	2" Service Line Roadway Crossing
15	Waterline Installation at Cul-de-sac
16	Typical Roadway Crossings
17	Encasement Pipe Spacer
18	Air Release Pit
19	Detector Check Valve Manhole
20	Water Sampling Station
21	Typical Stream Crossing

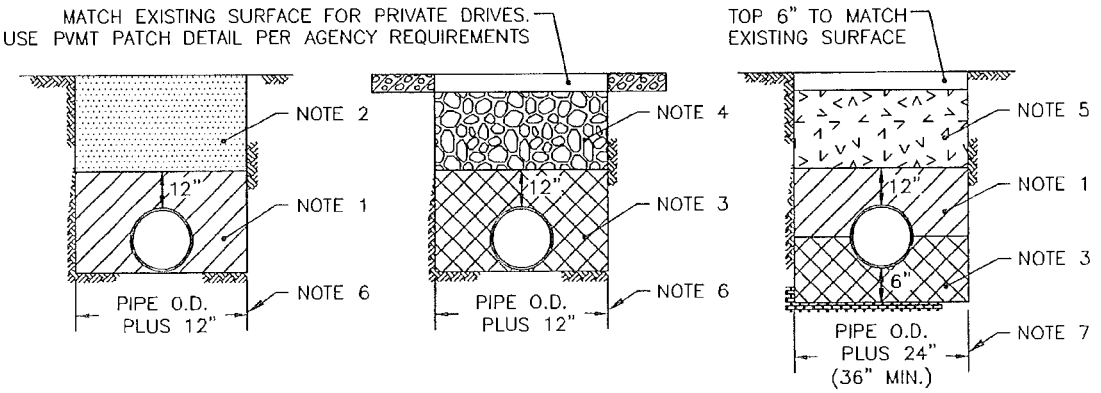

EARTH SECTION **ROAD CROSSING SECTION** **ROCK SECTION**

BEDDING AND BACKFILL NOTES:

1. SUITABLE EARTH EXCAVATED MATERIAL FREE FROM DEBRIS, MUCK, MUD BALLS, ROCK, AND HARD OBJECTS LARGER THAN 1" DIA. PIPE SHALL REST ON UNDISTURBED EARTH WITH CUTOUT FOR PIPE BELL.
2. SUITABLE EARTH EXCAVATED MATERIAL FREE FROM DEBRIS, MUCK, MUD BALLS, ROCK, AND HARD OBJECTS LARGER THAN 2" DIA.
3. WASTE ROCK 1/4" OR SMALLER.
4. FOR COUNTY ROAD USE 2.5" MINUS LIMESTONE ROCK. FOR OTHER ROADWAYS AND PRIVATE DRIVES USE 1" MINUS LIMESTONE ROCK, OR AS REQUIRED BY LOCAL JURISDICTION.
5. SUITABLE MIX OF EARTH EXCAVATED MATERIAL WITH NO MORE THAN 50% EXCAVATED ROCK NO LARGER THAN 4" SIZE.
6. ADDITIONAL TRENCH WIDTH AS REQUIRED TO INSTALL FITTINGS AND THRUST BLOCKS.
7. ADDITIONAL TRENCH WIDTH TO INSTALL FITTINGS AND THRUST BLOCKS TO BE PIPE O.D. PLUS 32" WITH A MINIMUM OF 42".

GENERAL NOTES:

1. BEDDING MATERIAL SHALL BE TAMPED IN LAYERS UNDER THE PIPE HAUNCHES AND AROUND THE PIPE TO TOP OF PIPE. TO PROVIDE A UNIFORM BEARING SURFACE.
2. ANY OVER EXCAVATION DUE TO REMOVAL OF UNSUITABLE MATERIAL IN THE BOTTOM OF THE TRENCH SHALL BE BACKFILLED WITH ACCEPTABLE MATERIAL AND COMPACTED.
3. COVER OVER THE PIPE SHALL BE 48" UNLESS OTHERWISE SHOWN ON THE PLANS.
4. LOCATOR WIRE, NOT SHOWN, SHALL BE INSTALLED ON ALL PIPE.
5. FOR ROCK SECTION, PROVIDE A 5' LONG EARTHEN DAM SECTION OF SUITABLE EARTH EXCAVATED MATERIAL FROM BOTTOM OF TRENCH TO TOP OF TRENCH A MINIMUM SPACING OF 100 FT, OR AS DIRECTED BY THE DISTRICT INSPECTOR.

CONSOLIDATED WATER

BARTLETT & WEST 1719 SOUTHRIDGE DR. JEFFERSON CITY, MO PHONE 573-634-3181	CPWSD NO. 1 OF BOONE COUNTY PIPE TRENCHING DETAIL	PROJ NO: 18080.000 DATE: FEB 2013	DETAIL NUMBER 1

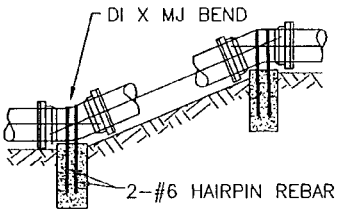

VERTICAL THRUST BLOCKS								
Pipe	Min. Volume of Concrete				Min. Bearing Area			
Size	11.25	22.5	45	90	11.25	22.5	45	90
(in)	(cy)	(cy)	(cy)	(cy)	(sf)	(sf)	(sf)	(sf)
4	0.2	0.4	0.7	1.0	0.0	0.1	0.6	2.0
6	0.4	0.8	1.5	2.1	0.1	0.3	1.2	4.2
8	0.7	1.4	2.5	3.5	0.1	0.5	2.1	7.2
10	1.1	2.1	3.9	5.5	0.2	0.8	3.3	11.1
12	1.5	3.0	5.5	7.7	0.3	1.2	4.6	15.7

VERTICAL BEND THRUST BLOCK DETAIL

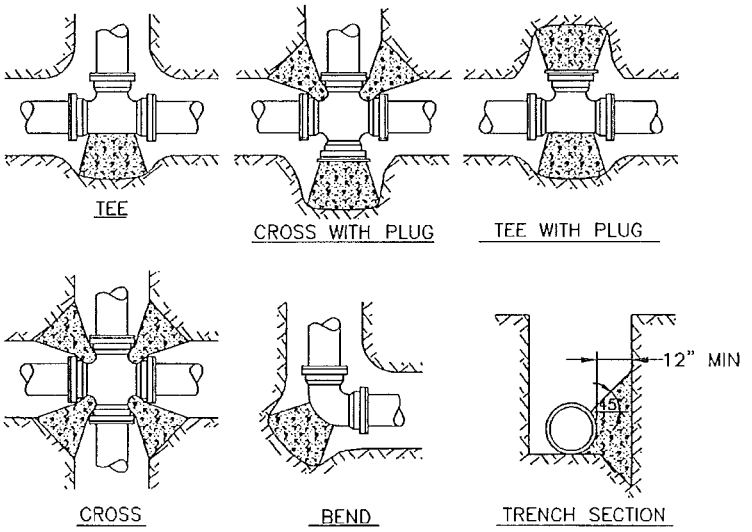

HORIZONTAL THRUST BLOCKS						
Pipe	Minimum Bearing Area					
Size	11.25	22.5	45	90	Tee/Plug	Cross *
(in)	(sf)	(sf)	(sf)	(sf)	(sf)	(sf)
4	0.4	0.8	1.5	2.8	2.0	1.0
6	0.8	1.7	3.2	6.0	4.2	2.1
8	1.4	2.8	5.5	10.1	7.2	3.6
10	2.2	4.4	8.5	15.8	11.1	5.6
12	3.1	6.1	12.0	22.2	15.7	7.8
14	3.7	7.4	14.5	26.7	18.9	9.5
16	4.8	9.6	18.9	34.9	24.7	12.3

* Use at each corner

HORIZONTAL BEND THRUST BLOCK DETAIL

1. THRUST BLOCKS SHALL BE FORMED AND POURED AGAINST UNDISTURBED SOIL. KEEP "T" BOLTS CLEAR OF CONCRETE, WRAPPED IN 8 MIL VINYL PLASTIC PROTECTOR.
2. THICKNESS BETWEEN FITTING AND SOIL SHALL BE A MINIMUM OF 12".
3. CONCRETE SHALL HAVE 3000 PSI MINIMUM COMPRESSIVE STRENGTH.
4. PLUGS SHALL BE WRAPPED WITH 8 MIL VISQUEEN.

BARTLETT & WEST
1719 SOUTHRIDGE DR.
JEFFERSON CITY, MO
PHONE 573-634-3181

CPWSD NO. 1 OF BOONE COUNTY
THRUST BLOCKING DETAIL

PROJ NO: 18080.000
DATE: FEB 2013
DETAIL NUMBER 2

Drawing Name: W:\Proj\18000\18080\18080.000\AutoCad\Standard Details\STANDARD DETAILS Feb 2013.dwg Layout Name: THRUST BLOCKING Plotted By: KASOBIS Plotted on: 2/27/2013 11:28:11 AM

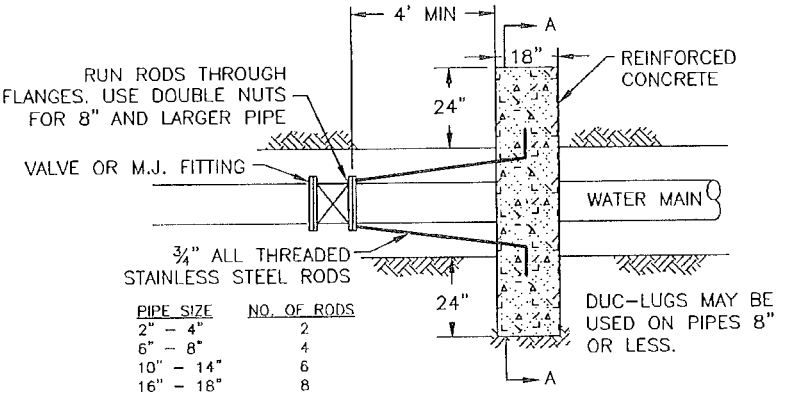

PIPE SIZE	NO. OF RODS
2" – 4"	2
6" – 8"	4
10" – 14"	6
16" – 18"	8

PLAN VIEW

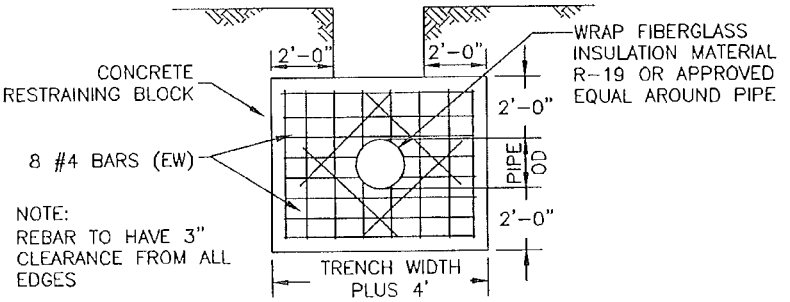

SECTION A-A

BARTLETT & WEST 1719 SOUTHRIDGE DR. JEFFERSON CITY, MO PHONE 573-634-3181	CPWSD NO. 1 OF BOONE COUNTY RESTRAINING BLOCK DETAIL	PROJ NO: 18080.000 DATE: FEB 2013	DETAIL NUMBER 3

Drawing Name: W:\Proj\18000\18080\18080.000\AutoCad\Standard Details\STANDARD DETAILS Feb 2013.dwg Layout Name: RESTRAIN BLOCK Plotted By: KASOBER Plotted on: 2/22/2013 3:22:42 PM

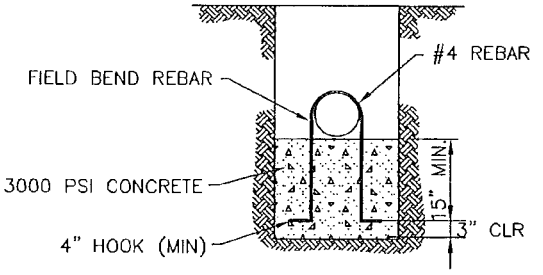

HAIRPIN REBAR DETAIL

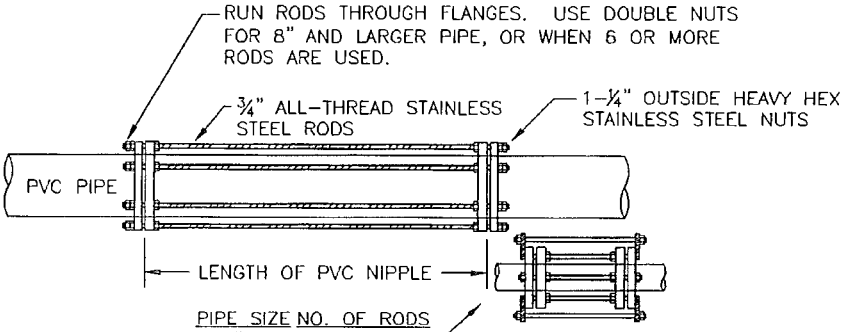

PIPE SIZE	NO. OF RODS
4" and Below	2
6" – 8"	4
10" – 14"	6
16" – 18"	8
20" – 24"	12

TIEBACK RODS MAY BE ATTACHED TO D.I. FITTINGS, VALVES, HYDRANTS, AND CONCRETE RESTRAINING BLOCKS.

TIEBACK ROD DETAIL

BARTLETT & WEST
1719 SOUTHRIDGE DR.
JEFFERSON CITY, MO
PHONE 573-634-3181

CPWSD NO. 1 OF BOONE COUNTY
TIEBACK ROD &
HAIRPIN REBAR DETAILS

PROJ NO: 18080.000
DATE: FEB 2013
DETAIL NUMBER 4

Drawing Name: W:\Proj\18000\18080\18080.000\AutoCad\Standard Details\STANDARD DETAILS Feb 2013.dwg Layout Name: TIEBACK-HAIRPIN Plotted By: KASC0913 Plotted on: 2/22/2013 3:23:07 PM

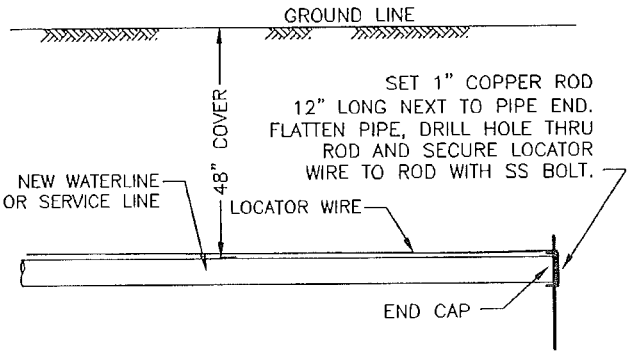

SECTION VIEW

TERMINATION DETAIL

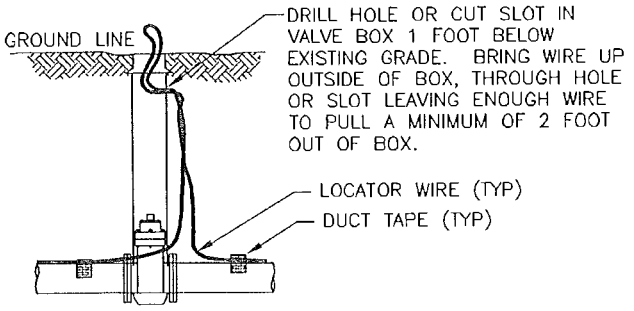

SECTION VIEW

LOCATOR WIRE NOTES:

1. LOCATOR WIRE TO BE PE-45 SOLID BLUE TRACER WIRE AS MANUFACTURED BY KRIS-TECH WIRE COMPANY.
2. DUCT TAPE LOCATOR WIRE TO TOP OF PIPE ON EACH SIDE OF BELL AND ONE IN THE MIDDLE OF THE PIPE.
3. AT ALL ENDS OF WATER LINES, THE LOCATOR WIRE SHALL BE EXTENDED 2' ABOVE THE TOP OF THE GROUND AND BE ACCESSIBLE. THERE SHALL BE NO MORE THAN ONE SPLICE BETWEEN ACCESS POINTS AT VALVES.
4. TWO SETS OF LOCATOR WIRE SHALL BE INSTALLED ON PIPE AT ALL BORINGS UNDER HIGHWAYS, AND CREEKS, OR AT ADDITIONAL LOCATIONS AS SHOWN ON THE PLANS.
5. DO NOT WRAP WIRE AROUND BOLTS, NUTS, ETC.
6. SPLICE LOCATOR WIRE USING SPLICING KIT 3M DBR. DUCT TAPE LOCATOR WIRE TO PIPE ON EACH END OF THE SPLICE.
7. WHERE CALLED FOR ON THE PLANS FOR A SPLICE BOX, THE SPLICE BOX SHALL BE IDENTICAL TO A VALVE BOX RISER AND LID WITH THE INSTALLATION OF THE WIRE IDENTICAL TO THAT IN A VALVE BOX.
8. LOCATOR WIRE INSTALLATION CONTINUITY SHALL BE WARRANTED UNDER THE SAME 1 YEAR PIPE AND WORKMANSHIP WARRANTY.

BARTLETT & WEST
1719 SOUTHRIDGE DR.
JEFFERSON CITY, MO
PHONE 573-634-3181

CPWSD NO. 1 OF BOONE COUNTY LOCATOR WIRE DETAILS	PROJ NO: 18080.000 DATE: FEB 2013	DETAIL NUMBER 5

Drawing Name: W:\Proj\18000\18080\18080.000\AutoCad\Standard Details\STANDARD DETAILS Feb 2013.dwg Layout Name: LOCATOR WIRE Plotted By: KRS09913 Plotted on: 2/22/2013 3:23:30 PM

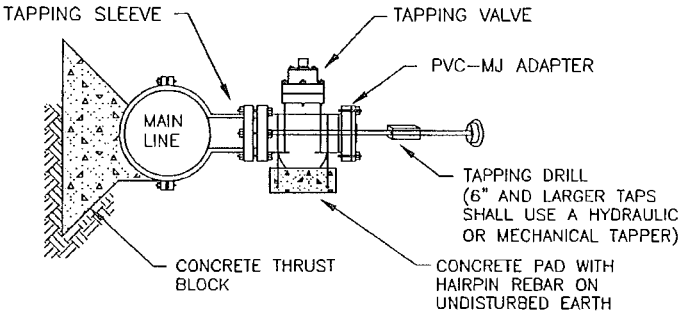

SECTION VIEW

TAPPING SLEEVE AND VALVE ASSEMBLY

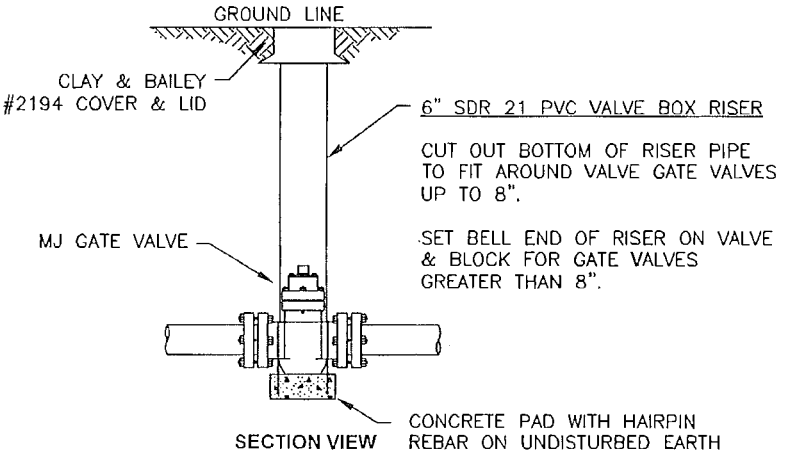

SECTION VIEW

GENERAL NOTES:

1. ANCHOR COUPLING OR PVC PIPE WITH TIEBACK RODS WILL BE REQUIRED BETWEEN VALVE AND FITTINGS
2. WRAP VALVE AND JOINTS WITH VISQUEEN.
3. VALVE AND RISER SHALL BE PLUMB AND CHECKED BY A LEVEL.

GATE VALVE AND VALVE BOX DETAIL

BARTLETT & WEST 1719 SOUTHRIDGE DR. JEFFERSON CITY, MO PHONE 573-634-3181	CPWSD NO. 1 OF BOONE COUNTY GATE VALVE DETAIL	PROJ NO: 18080.000 DATE: FEB 2013	DETAIL NUMBER 6

Drawing Name: W:\Proj\18000\18080\18080.000\AutoCad\Standard Details\STANDARD DETAILS Feb 2013.dwg Layout Name: GATE VALVE Plotted By: KASOOOI13 Plotted on: 2/22/2013 3:24:15 PM

NOTES:

1. VALVE, VALVE RISER AND DISCHARGE RISER PIPE TO BE PLUMB AND CHECKED BY A LEVEL.
2. APPROVED FIRE HYDRANTS ARE: AMERICAN DARLING B-84-B-5, CLOW MEDALLION, AND MUELLER CENTURION NO. 250.
3. COMMERCIAL HYDRANT SETTING SHALL BE 8" PIPING, VALVE, ANCHOR COUPLING AND HYDRANT SHOE IN PLACE OF 6" SHOWN ON DRAWING.
4. 4" POST HYDRANT SETTING SHALL BE 4" PIPING, GATE VALVE, ANCHOR COUPLING IN PLACE OF 6" SHOWN ON DRAWING.

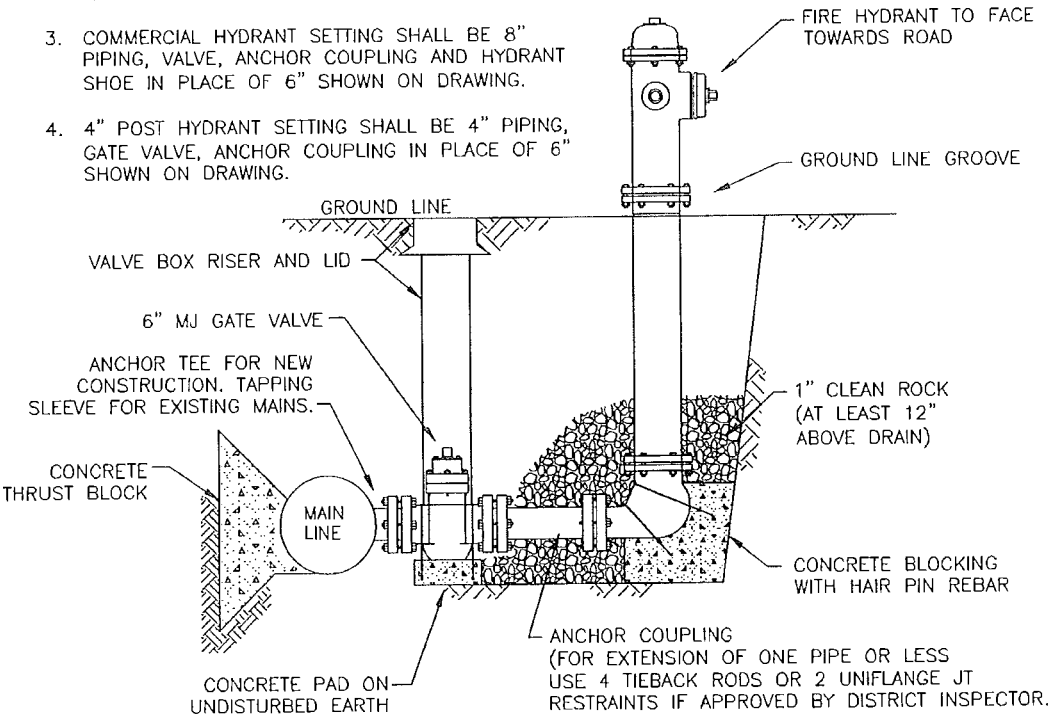

SECTION VIEW

BARTLETT & WEST 1719 SOUTHRIDGE DR. JEFFERSON CITY, MO PHONE 573-634-3181	CPWSD NO. 1 OF BOONE COUNTY FIRE HYDRANT DETAIL	PROJ NO: 18080.000 DATE: FEB 2013	DETAIL NUMBER 7

Drawing Name: W:\Proj\18000\18080\18080.000\AutoCad\Standard Details\STANDARD DETAILS Feb 2013.dwg Layout Name: FIRE HYDRANT Plotted By: KASOBERS Plotted on: 2/22/2013 3:24:40 PM

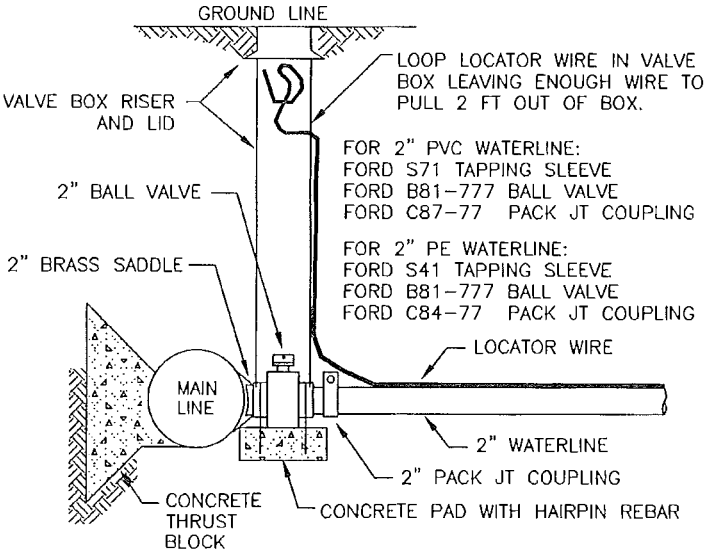

SECTION VIEW

BARTLETT & WEST
1719 SOUTHRIDGE DR.
JEFFERSON CITY, MO
PHONE 573-634-3181

CPWSD NO. 1 OF BOONE COUNTY 2" CONNECTION TO MAIN DETAIL	PROJ NO: 18080.000 DATE: FEB 2013	DETAIL NUMBER 8

Drawing Name: W:\Proj\18000\18080\18080.000\AutoCad\Standard Details\STANDARD DETAILS Feb 2013.dwg Layout Name: 2-CONNECTION Plotted By: KAS00913 Plotted on: 2/22/2013 3:25:13 PM

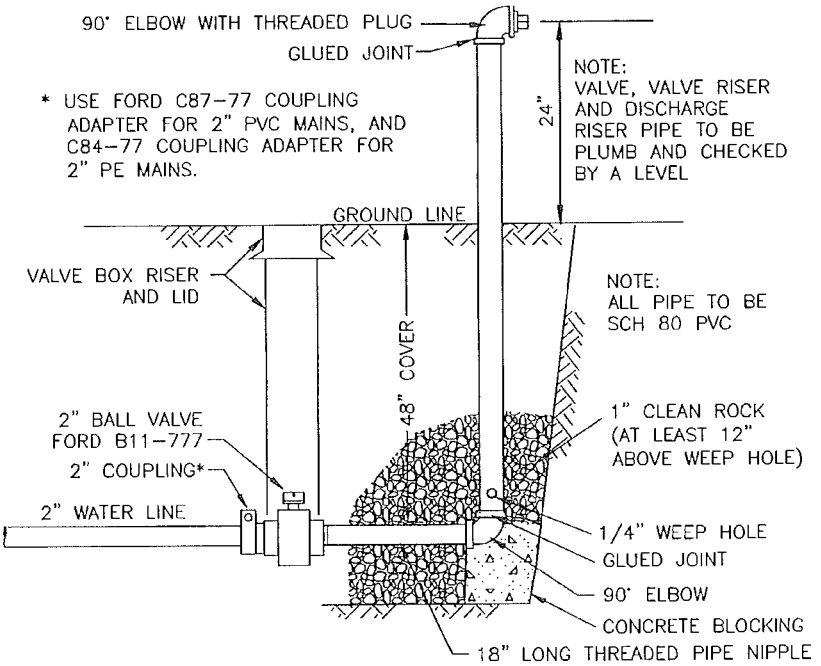

SECTION VIEW

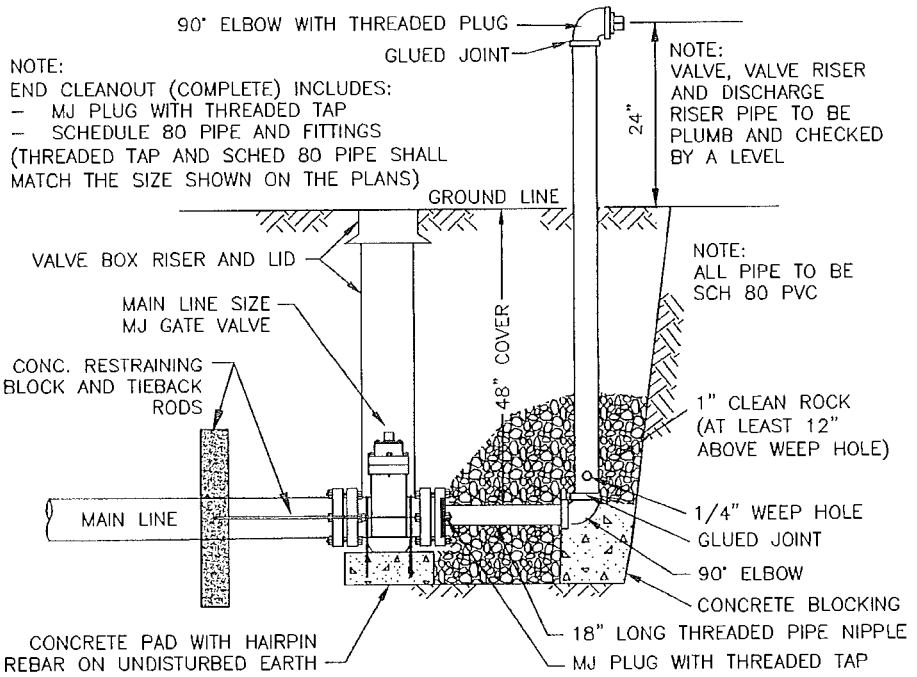

SECTION VIEW

BARTLETT & WEST 1719 SOUTHRIDGE DR. JEFFERSON CITY, MO PHONE 573-634-3181	CPWSD NO. 1 OF BOONE COUNTY END CLEANOUT DETAILS	PROJ NO: 18080.000 DATE: FEB 2013	DETAIL NUMBER 9

Drawing Name: W:\Proj\15000\18080\180030.000\AutoCad\Standard Details\STANDARD DETAILS Feb 2013.dwg Layout Name: END CLEANOUT Plotted By: KASSOBRIS Plotted on: 2/22/2013 3:28:35 PM

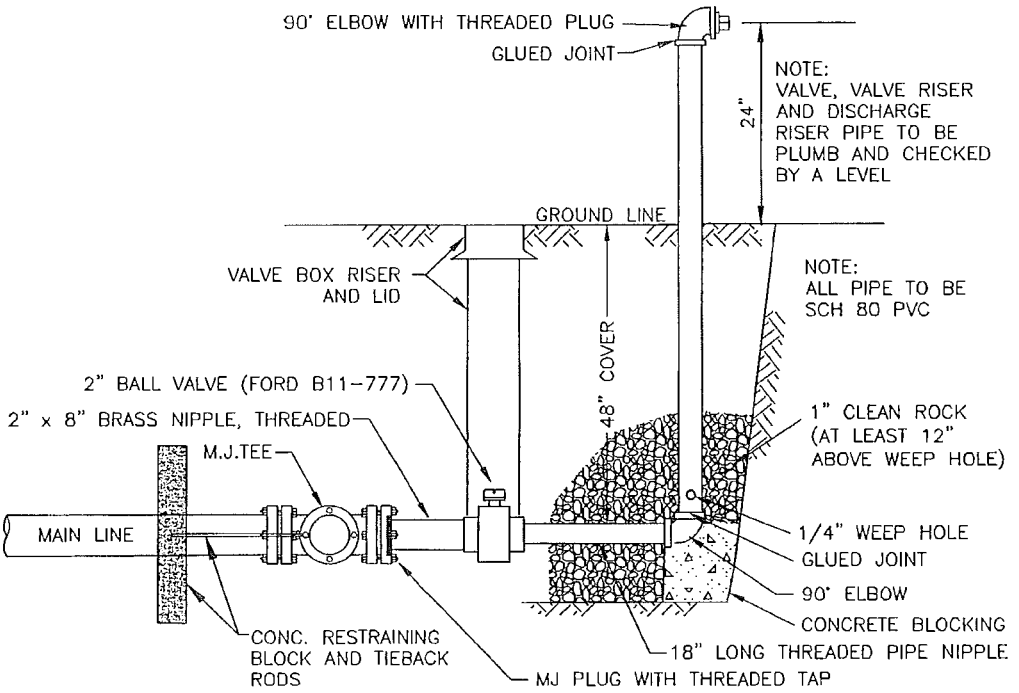

SECTION VIEW

BARTLETT & WEST
1719 SOUTHRIDGE DR.
JEFFERSON CITY, MO
PHONE 573-634-3181

CPWSD NO. 1 OF BOONE COUNTY END CLEANOUT DETAIL AT TEE OR CROSS	PROJ NO: 18080.000 DATE: FEB 2013	DETAIL NUMBER 10

Drawing Name: W:\Proj\18000\18080\18080.000\AutoCad\Standard Details\STANDARD DETAILS Feb 2013.dwg Layout Name: END CLEANOUT (2) Plotted By: KAS09913 Plotted on: 2/22/2013 3:28:58 PM

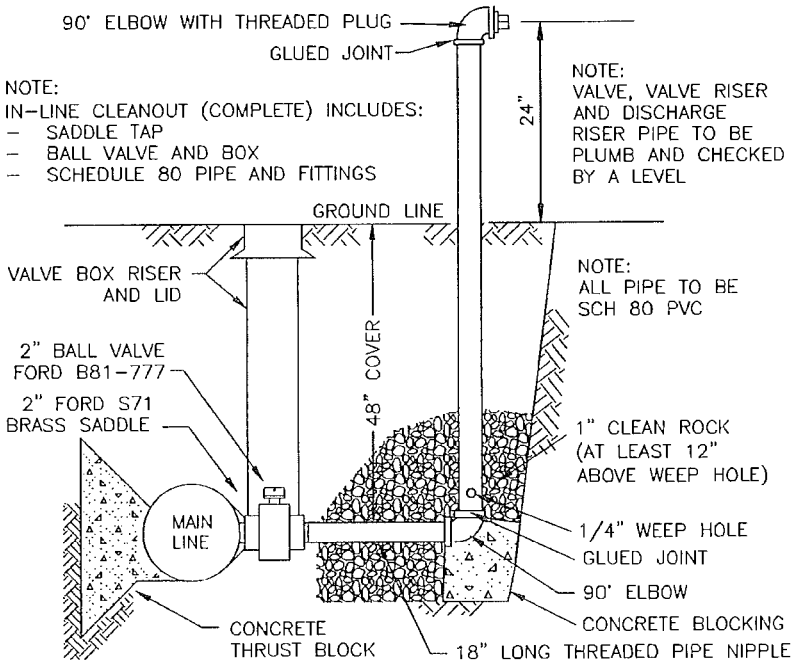

SECTION VIEW

2" SIDE CLEANOUT

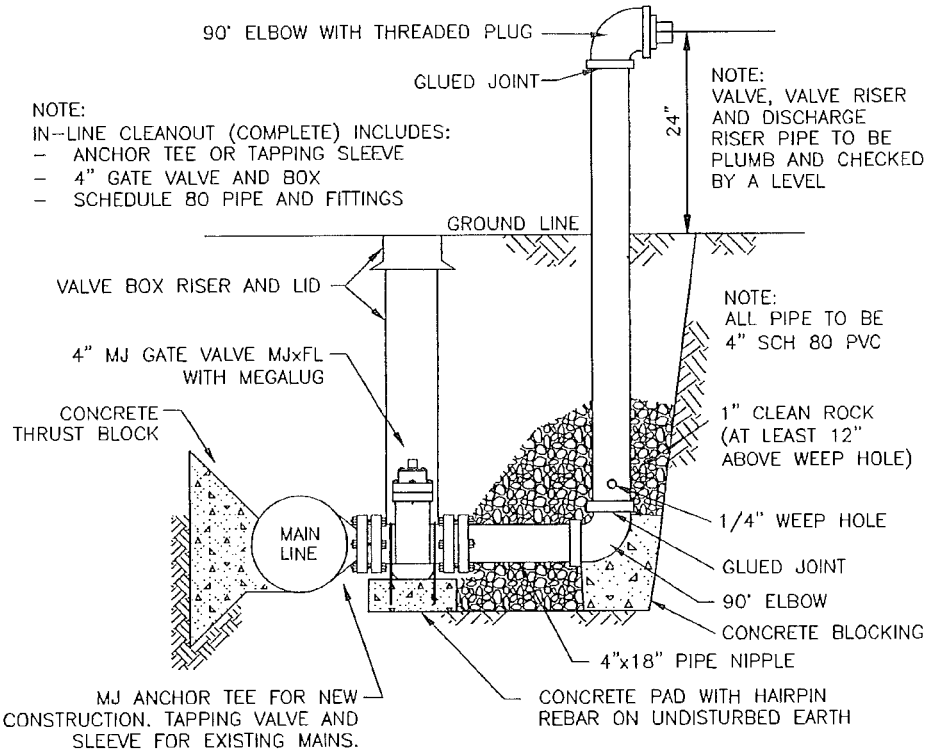

SECTION VIEW

4" SIDE CLEANOUT

BARTLETT & WEST 1719 SOUTHRIDGE DR. JEFFERSON CITY, MO PHONE 573-634-3181	CPWSD NO. 1 OF BOONE COUNTY SIDE CLEANOUT DETAILS	PROJ NO: 18080.000 DATE: FEB 2013	DETAIL NUMBER 11

Drawing Name: W:\Proj\18000\18080\18080.000\AutoCad\Standard Details\STANDARD DETAILS Feb 2013.dwg Layout Name: SIDE CLEANOUT Plotted By: KASCOBIS Plotted on: 2/22/2013 3:20:16 PM

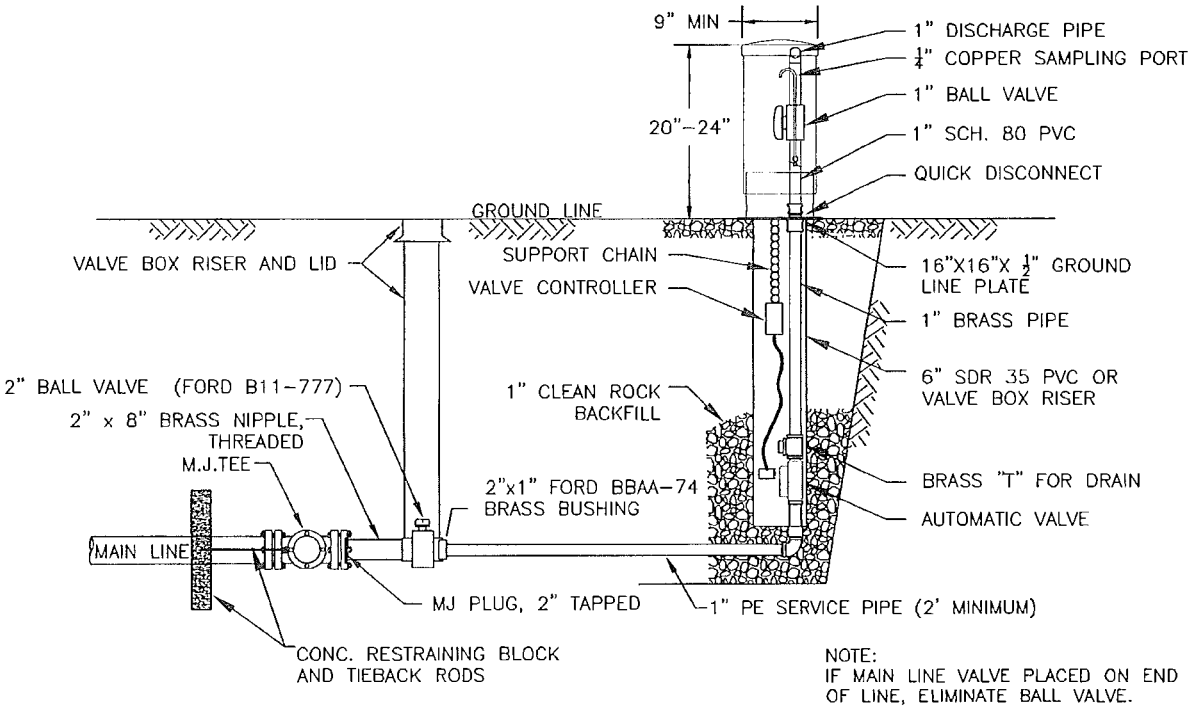

SECTION VIEW

REQUIREMENTS

1. AUTOMATIC FLUSHING DEVICE SHALL HAVE A 1" BRASS FIP INLET, LEADING VERTICALLY INTO A 1"AUTOMATIC SOLENOID VALVE. AUTOMATIC SOLENOID VALVE SHALL HAVE INTERNAL, SELF–CLEANING DEBRIS SCREEN, AND HAVE A 220 PSI RATING. SOLENOID SHALL HAVE NO LOOSE PARTS WHEN REMOVED FROM VALVE.
2. SOLENOID VALVE SHALL HAVE AN O–RING CONNECTOR LOCATED UNDER THE VALVE.
3. EACH UNIT SHALL BE FURNISHED WITH A STAND–ALONE VALVE CONTROLLER. VALVE CONTROLLER WILL NOT REQUIRE A SECOND HAND–HELD DEVICE FOR PROGRAMMING, WITH A MINIMUM OF 9 FLUSHING CYCLES PER DAY.
4. VALVE CONTROLLER SHALL BE SUBMERSIBLE TO 12', OPERATE WITH A 9 VOLT BATTERY AND HAVE RESIN–SEALED ELECTRICAL COMPONENTS.
5. ALL ABOVE GROUND COMPONENTS SHALL BE CONTAINED WITHIN A UV–RESISTANT LOCKING DOMED COVER.
6. UNIT SHALL BE AS MANUFACTURED BY KUPFERLE FOUNDRY COMPANY MODEL 9400–A ST. LOUIS, MO. OR APPROVED EQUAL.
7. VALVE, VALVE RISER TO BE PLUMB AND CHECKED WITH A LEVEL.

BARTLETT & WEST 1719 SOUTHRIDGE DR. JEFFERSON CITY, MO PHONE 573-634-3181	CPWSD NO. 1 OF BOONE COUNTY AUTO FLUSH UNIT DETAIL	PROJ NO: 18080.000 DATE: FEB 2013	DETAIL NUMBER 12

Drawing Name: W:\Proj\13000\18080\18080.000\AutoCad\Standard Details\STANDARD DETAILS Feb 2013.dwg Layout Name: AUTO FLUSH Plotted By: KA50009113 Plotted on: 2/26/2013 11:29:50 AM

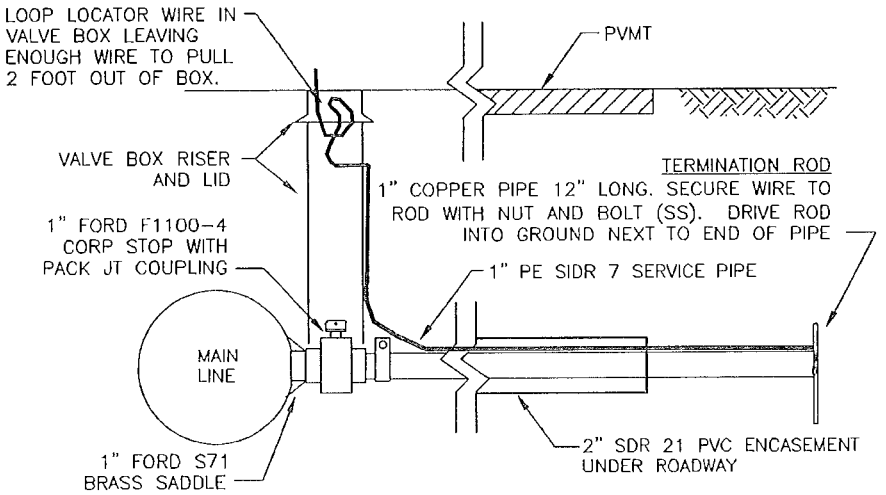

SECTION VIEW

1" SERVICE LINE ROADWAY CROSSING WITHOUT METER CONNECTION

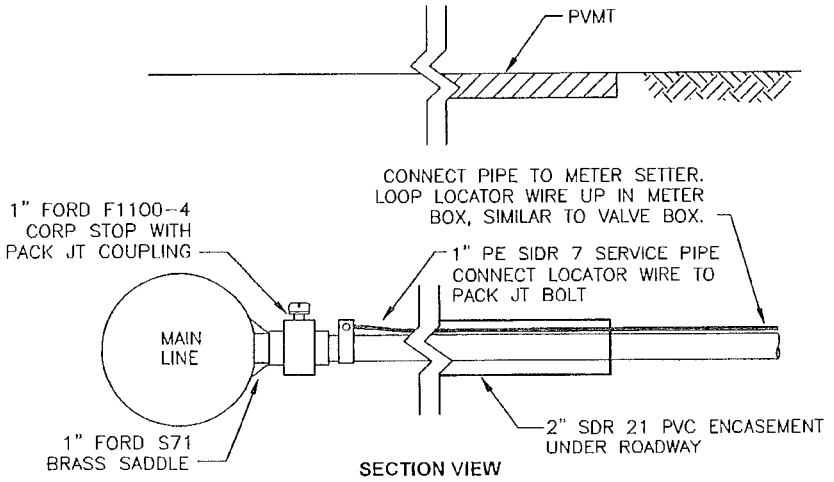

SECTION VIEW

1" SERVICE LINE ROADWAY CROSSING

BARTLETT & WEST 1719 SOUTHRIDGE DR. JEFFERSON CITY, MO PHONE 573-634-3181	CPWSD NO. 1 OF BOONE COUNTY 1" SERVICE LINE ROADWAY CROSSING DETAILS	PROJ NO: 18080.000 DATE: FEB 2013	DETAIL NUMBER 13

Drawing Name: W:\Proj\18000\18080\18080.000\AutoCad\Standard Details\STANDARD DETAILS Feb 2013.dwg Layout Name: 1-CROSSINGS Plotted By: KASCHEIB Plotted on: 3/26/2013 10:33:20 AM

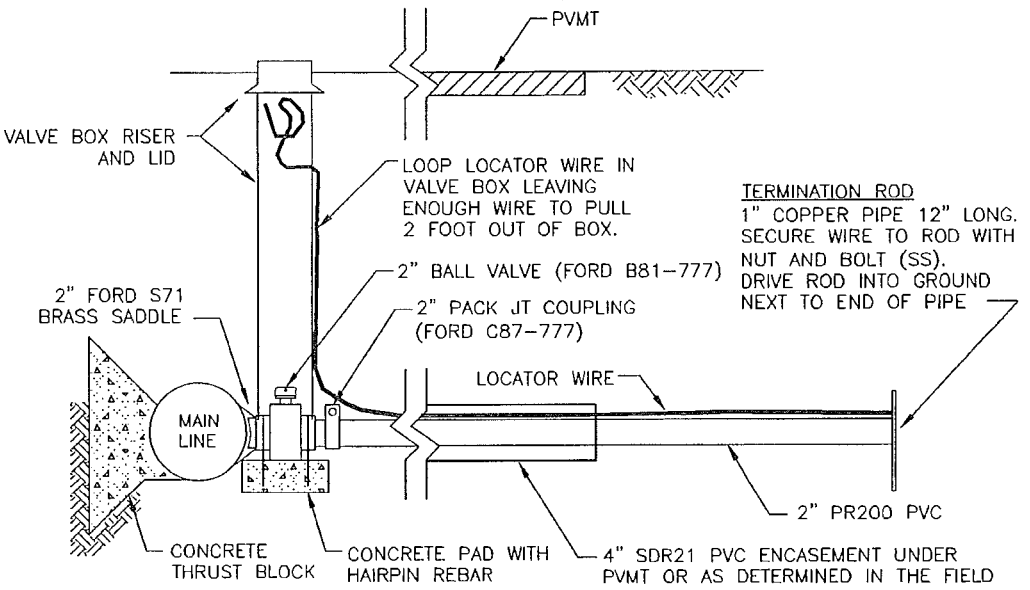

SECTION VIEW

BARTLETT & WEST
1719 SOUTHRIDGE DR.
JEFFERSON CITY, MO
PHONE 573-634-3181

CPWSD NO. 1 OF BOONE COUNTY 2" SERVICE LINE ROADWAY CROSSING DETAIL	PROJ NO: 18080.000 DATE: FEB 2013	DETAIL NUMBER 14

Drawing Name: W:\Proj\18000\18080\18080.000\AutoCad\Standard Details\STANDARD DETAILS Feb 2013.dwg Layout Name: 2-CROSSING Plotted By: KASOBSIS Plotted on: 3/26/2013 10:34:03 AM

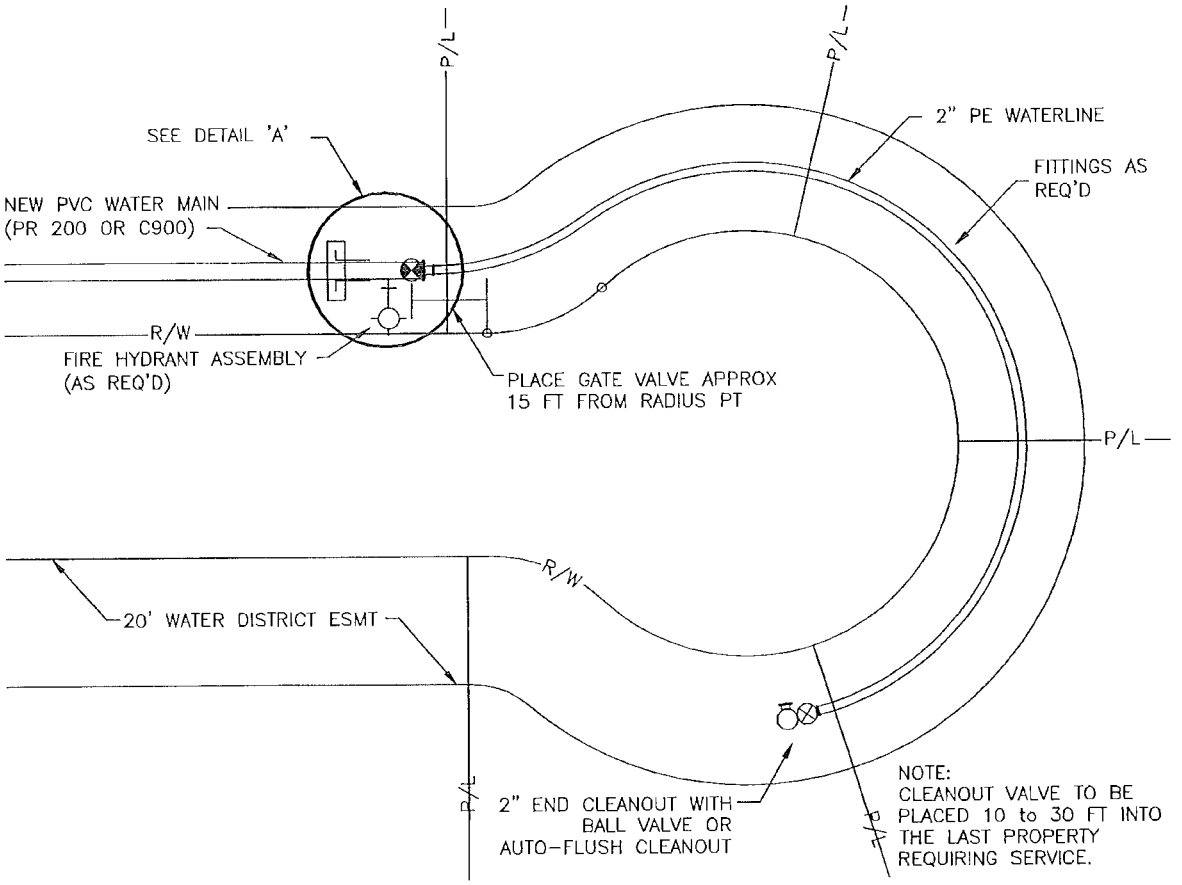

PLAN VIEW

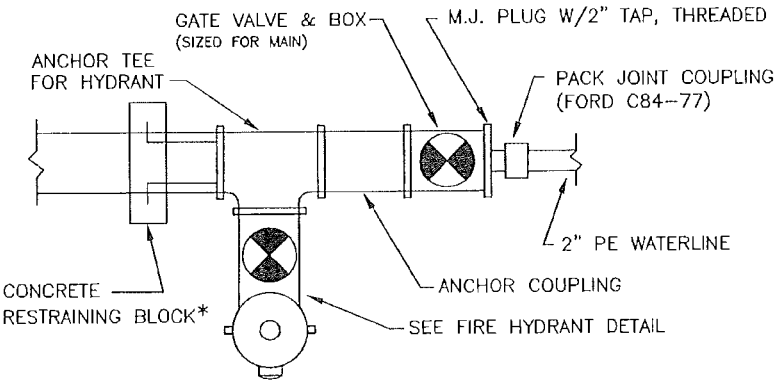

*IF FIRE HYDRANT IS NOT REQUIRED, THEN ANCHOR CONCRETE RESTRAINING BLOCK TO GATE VALVE AND OMIT ANCHOR COUPLING

DETAIL A

BARTLETT & WEST 1719 SOUTHRIDGE DR. JEFFERSON CITY, MO PHONE 573-634-3181	CPWSD NO. 1 OF BOONE COUNTY WATERLINE INSTALLATION AT CUL-DE-SAC	PROJ NO: 18080.000 DATE: FEB 2013	DETAIL NUMBER 15

Drawing Name: W:\Proj\18000\18080\18080.000\AutoCad\Standard Details\STANDARD DETAILS Feb 2013.dwg Layout Name: CUL-DE-SAC Plotted By: KASCOB13 Plotted on: 3/25/2013 10:37:27 AM

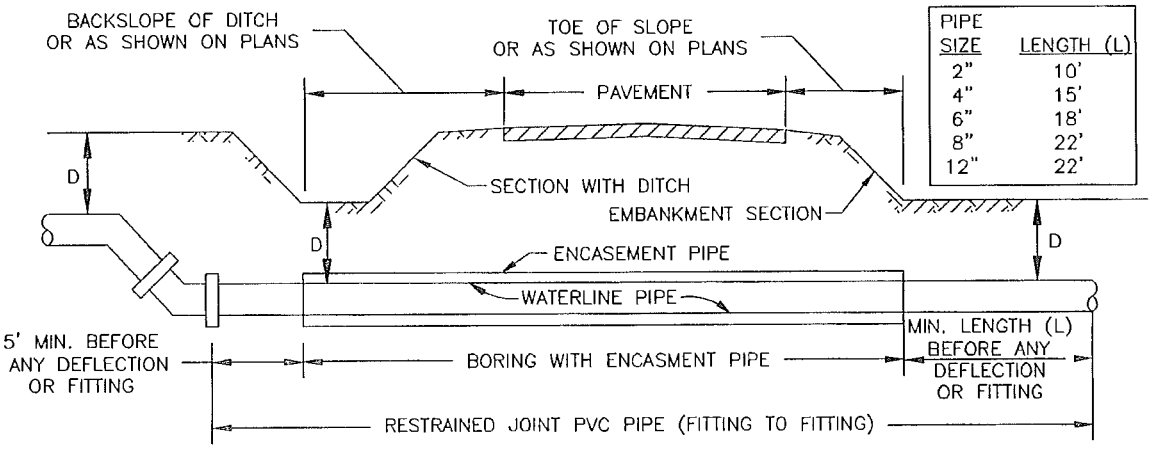

PIPE SIZE	LENGTH (L)
2"	10'
4"	15'
6"	18'
8"	22'
12"	22'

"D"– 48" FOR STEEL ENCASEMENT AND 72" FOR HDPE ENCASEMENT UNLESS OTHERWISE SPECIFIED

NOTES:
1. CASING TYPE, SIZE AND THICKNESS TO BE DETERMINED BY PERMITTING AGENCY OR SHOWN ON PLANS.
2. REFER TO ENCASEMENT DETAIL FOR SPACER AND END SEAL INSTALLATION.
3. LOCATOR WIRE IS NOT SHOWN.

ROADWAY CROSS-SECTION

TYPICAL BORING UNDER STATE HIGHWAY

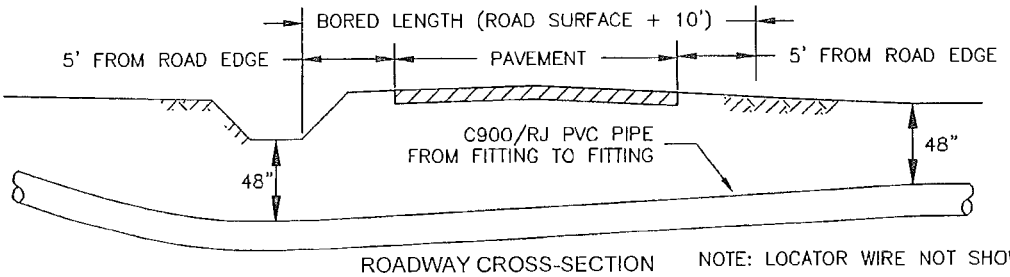

ROADWAY CROSS-SECTION NOTE: LOCATOR WIRE NOT SHOWN.

TYPICAL BORED ROAD CROSSING

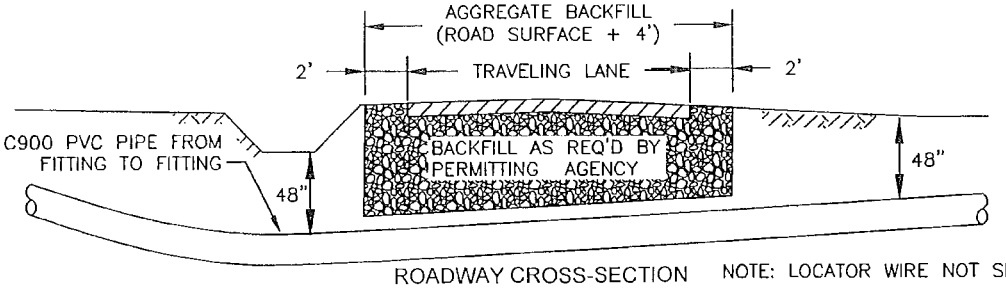

ROADWAY CROSS-SECTION NOTE: LOCATOR WIRE NOT SHOWN.

TYPICAL OPEN CUT ROAD CROSSING

BARTLETT & WEST 1719 SOUTHRIDGE DR. JEFFERSON CITY, MO PHONE 573-634-3181	CPWSD NO. 1 OF BOONE COUNTY TYPICAL ROADWAY CROSSING	PROJ NO: 18080.000 DATE: FEB 2013	DETAIL NUMBER 16

Drawing Name: W:\Proj\18000\18080\18080.000\AutoCad\Standard Details\STANDARD DETAILS Feb 2013.dwg Layout Name: RD CROSSINGS Plotted By: KASOOBIS Plotted on: 3/26/2013 10:36:13 AM

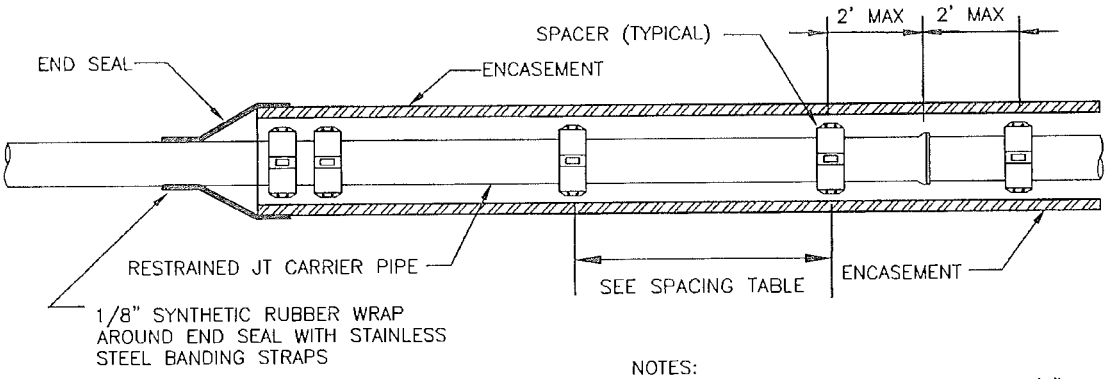

SPACING TABLE		
Carrier Pipe Diameter (in)	Skid Spacing Maximum (ft)	Spacer Width (inch)
3	3	5
4	4.5	6
6	6	6
8	7	8
10	8.5	8
12	9.5	8
12+	10	8

NOTES:

1. SPACER O.D. SHALL BE AT LEAST 1/2" LARGER THAN PIPE BELL O.D.
2. CLEARANCE BETWEEN SPACER O.D. AND ENCASEMENT PIPE I.D. SHALL BE AT LEAST 1-1/2".
3. A MINIMUM OF 3 SPACERS PER INDIVIDUAL PIPE REGARDLESS OF PIPE LENGTH.
4. USE DOUBLE SPACERS AT END & ONE EACH SIDE OF A JOINT CASING.
5. END SEALS TO BE SYNTHETIC RUBBER BOOT WITH STAINLESS STEEL ADJUSTING BINDING STRAPS.
6. LOCATOR WIRE NOT SHOWN.

BARTLETT & WEST
1719 SOUTHRIDGE DR.
JEFFERSON CITY, MO
PHONE 573-634-3181

CPWSD NO. 1 OF BOONE COUNTY

ENCASEMENT PIPE SPACER DETAIL

PROJ NO: 18080.000

DATE: FEB 2013

DETAIL NUMBER **17**

Drawing Name: W:\Proj\18000\18080\18080.000\AutoCad\Standard Details\STANDARD DETAILS Feb 2013.dwg Layout Name: CASING SPACER Plotted By: KJSCOBIN Plotted on: 3/26/2013 10:40:42 AM

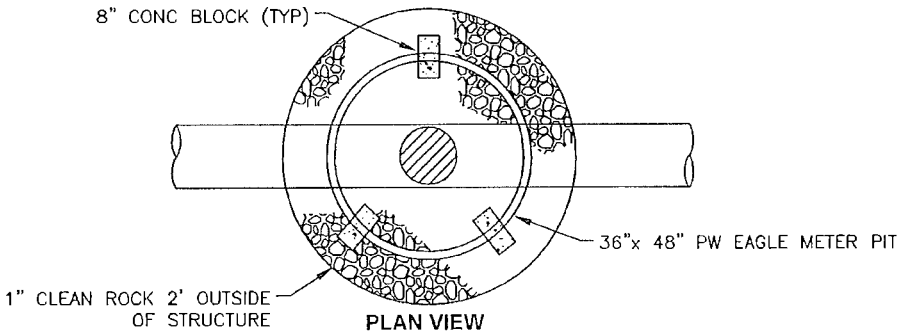

PLAN VIEW

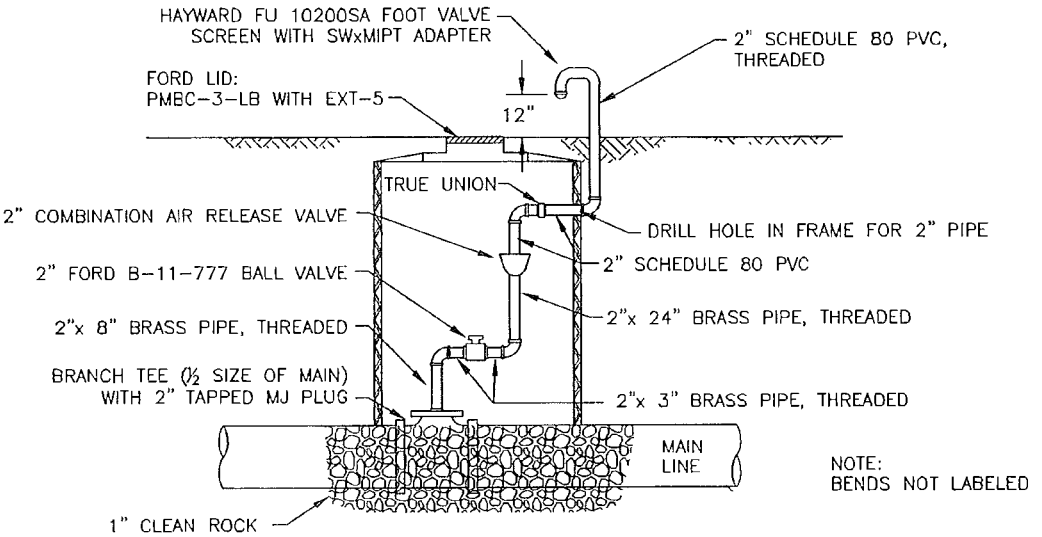

NOTE:
BENDS NOT LABELED

SECTION VIEW

BARTLETT & WEST 1719 SOUTHRIDGE DR. JEFFERSON CITY, MO PHONE 573-634-3181	CPWSD NO. 1 OF BOONE COUNTY AIR RELEASE PIT DETAIL	PROJ NO: 18080.000 DATE: FEB 2013	DETAIL NUMBER 18

Drawing Name: W:\Proj\18000\18080C\18080.000\AutoCad\Standard Details\STANDARD DETAILS Feb 2013.dwg Layout Name: AIR RELEASE PIT Plotted By: KASOSKI3 Plotted on: 3/26/2013 10:41:11 AM

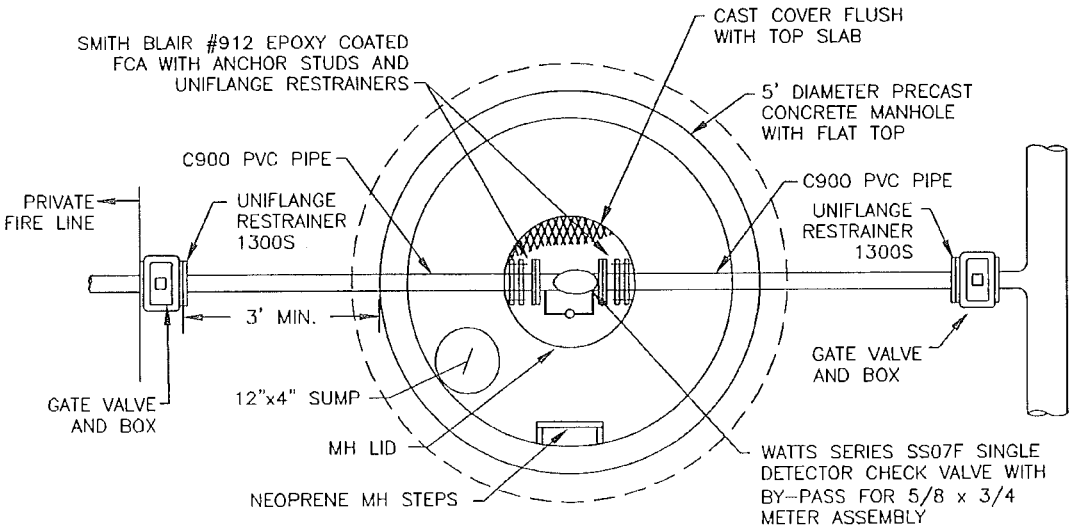

PLAN VIEW

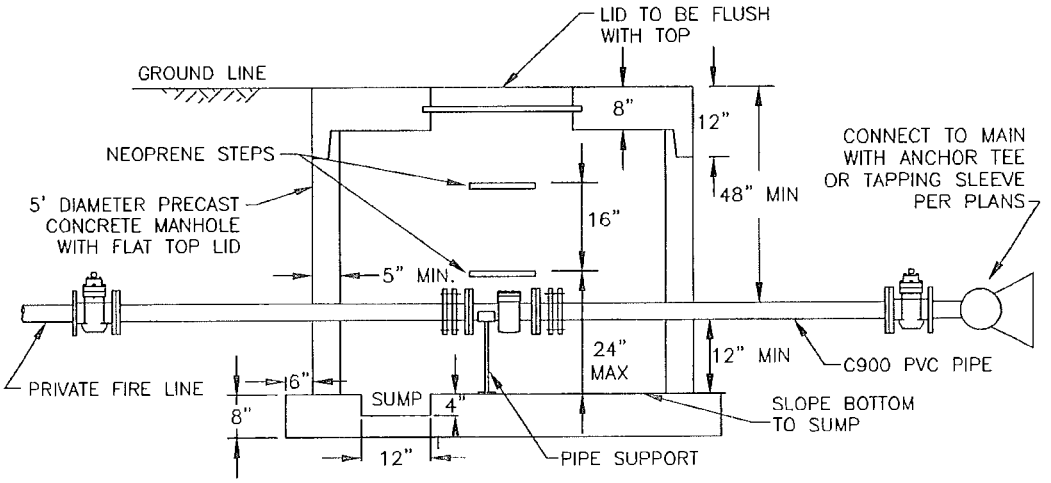

SECTION VIEW

GENERAL NOTES:

1. PRECAST STRUCTURE TO MEET ASTM C478 USING 4000 PSI CONCRETE.
2. RISER JOINTS TO BE A 2.1"x1" MASTIC ROPE.
3. ALL BASES & BOTTOM RISER TO BE POURED MONOLITHIC.
4. FRAME & COVER TO BE DEETER 1180 OR NEENAH R-1960-A.
5. STEP TO BE AMERICAN STEP ML-13 OR EQUAL.
6. ALL PIPE PENETRATIONS TO BE Z-LOCK SEALED.
7. MANHOLE TO BE ORDERED CUSTOM BUILT TO HEIGHT AND EXACT PIPE DEPTH. FOR CORRECT PLACEMENT OF THE PIPE Z LOCK SEALS, MAY REQUIRE EXPOSING EXISTING MAIN TO DETERMINE CORRECT PIPE CENTERLINE DEPTH PRIOR TO ORDERING MANHOLE. PROVIDE PRE-CASTER SIZE OF PIPE, DISTANCE FROM CENTERLINE OF PIPE TO GROUND LINE. THE MANHOLE HEIGHT AND DISTANCE BETWEEN THE CENTERLINE OF PIPE AND TOP OF FLOOR WILL NEED TO BE DETERMINED WITH PRE-CASTER.

BARTLETT & WEST
1719 SOUTHRIDGE DR.
JEFFERSON CITY, MO
PHONE 573-634-3181

CPWSD NO. 1 OF BOONE COUNTY DETECTOR CHECK VALVE MANHOLE	PROJ NO: 18080.000	DETAIL NUMBER
	DATE: FEB 2013	19

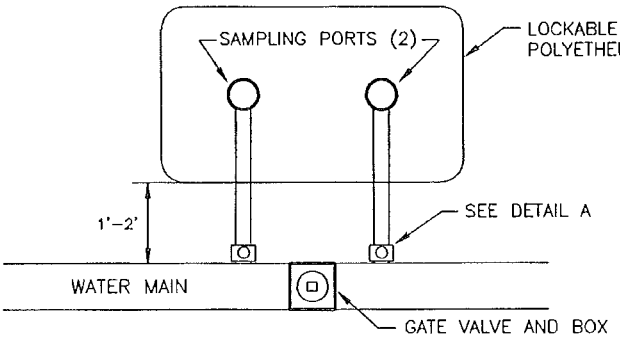

PLAN VIEW

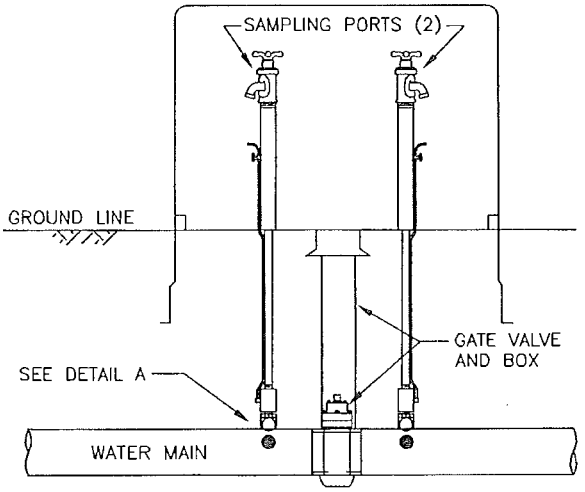

SECTION VIEW

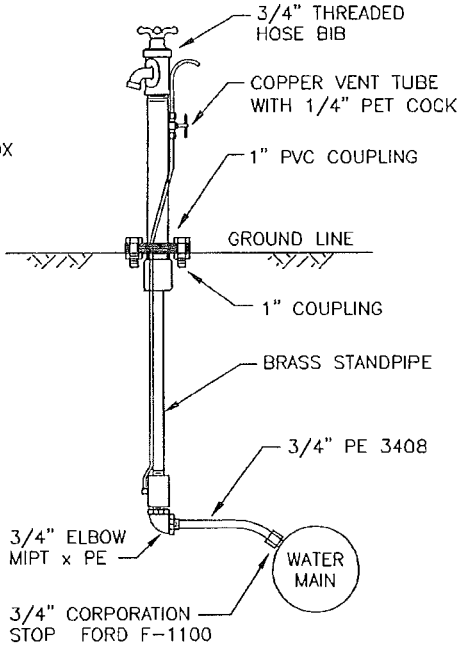

DETAIL A

NOTE:

SAMPLING STATION SHALL BE DUAL STANDPIPE DESIGN, PROVIDING TWO INDEPENDENT ALL-BRASS WATER STREAMS FOR UPSTREAM AND DOWNSTREAM SAMPLING.

EACH SAMPLING STATION SHALL BE PROVIDED WITH TWO INLETS, ¾" IN SIZE, AND TWO THREADED BRASS SAMPLING BIBBS LOCATED ABOVE GROUND NEAR TOP OF EACH STANDPIPE. A COPPER VENT TUBE ON EACH 3 ½' BURY STANDPIPE WILL ENABLE THE WATERWAYS TO BE PUMPED FREE OF STANDING WATER TO PREVENT FREEZING AND MINIMIZE BACTERIA GROWTH.

EACH STANDPIPE SHALL OPERATE INDEPENDENTLY USING A ROTATING HANDLE AND BE ENCLOSED IN ONE UV-RATED LOCKABLE PLASTIC ENCLOSURE.

ALL WORKING PARTS SHALL BE BRASS AND REMOVABLE FROM ABOVE GROUND WITH NO DIGGING, AS MANUFACTURED BY KUPFERLE FOUNDRY COMPANY, ST. LOUIS, MO. MODEL #8100, OR APPROVED EQUAL.

BARTLETT & WEST 1719 SOUTHRIDGE DR. JEFFERSON CITY, MO PHONE 573-634-3181	CPWSD NO. 1 OF BOONE COUNTY WATER SAMPLING STATION	PROJ NO: 18080.000 DATE: FEB 2013	DETAIL NUMBER 20

Drawing Name: W:\Proj\18000\18080\18080.000\AutoCad\Standard Details\STANDARD DETAILS Feb 2013.dwg Layout Name: SAMPLING STA Plotted By: KASC0913 Plotted on: 3/26/2013 10:42:28 AM

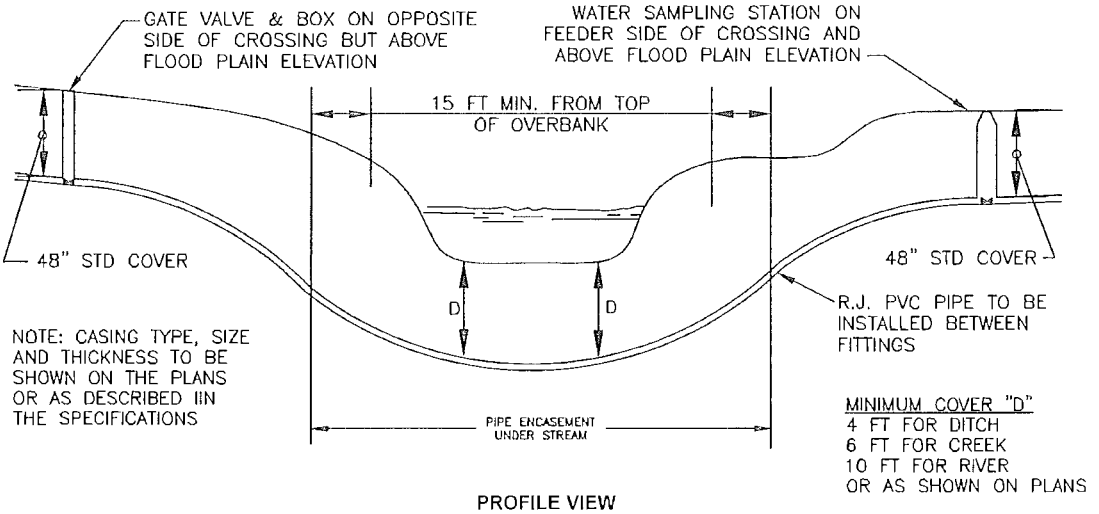

PROFILE VIEW

BARTLETT & WEST
1719 SOUTHRIDGE DR.
JEFFERSON CITY, MO
PHONE 573-634-3181

CPWSD NO. 1 OF BOONE COUNTY

TYPICAL STREAM CROSSING

PROJ NO: 18080.000

DATE: FEB 2013

DETAIL NUMBER 21

Drawing Name: W:\Proj\18000\18080\18080.000\AutoCad\Standard Details\STANDARD DETAILS Feb 2013.dwg Layout Name: STREAM CROSSING Plotted By: KASCOB13 Plotted on: 3/26/2013 10:43:09 AM

EASEMENT FOR UTILITY PURPOSES

KNOW ALL PERSONS BY THESE PRESENTS:

THAT THE UNDERSIGNED, **The City of Columbia**, a Municipal Corporation of the State of Missouri, , hereinafter referred to as **Grantor(s)**, on this _____ day of _____, 2015 in consideration of the sum of Ten Dollars ($10.00) and other valuable consideration, the receipt and sufficiency of which are hereby acknowledged, does or do hereby Grant, Bargain, and Sell to **The County of Boone**, a political subdivision of the State of Missouri, herein County or **Grantee** (Grantee's mailing address is: One Government Center, 801 E. Walnut, Street, Columbia, MO), its successors and assigns, both individually and as Trustee for the use and benefit of the "Benefited Parties" described below herein, hereinafter called Grantees, a utility easement with the right, privilege and authority to erect, construct, install, lay, operate, survey, inspect, maintain, repair, rebuild, replace and remove utility lines and utility facilities, including but not limited to water mains, power transmission lines, sanitary sewer lines and all other public utilities, and all necessary appurtenances to make said utilities complete and usable, over, under, across, and upon the following described real estate situated in Boone County, Missouri, to-wit:

Resolution #

LEGAL DESCRIPTION: Two parcels of land over tracts of land described in warranty deeds in Book 363 at Page 154, Book 606 at Page 3 and Book 514 at Page 491, said tracts also being described in surveys in Book 601 at Page 308 and Book 368 at Page 20, all of the Boone County Records; situate in the southwest quarter (1/4) of Section 30, Township 47 North, Range 11 West and the northwest quarter (1/4) of Section 31, Township 47 North, Range 11 West, Boone County, Missouri; said parcels being described as follows:

Starting, for the first parcel, at the northeast corner of the northwest quarter (1/4) of said Section 31; thence along the section line S.89°46'40"W., 904.06 feet to the POINT OF BEGINNNING on the easterly line of Tract 3 of the survey as recorded in Book 4492 at Page 46 of said Boone County Records; thence along the lines of said Tract 3 S.33°39'40"E., 394.59 feet; S.28°09'30"E., 182.16 feet; S.18°11'50"E., 241.86; S.29°20'00"W., 295.75 feet; S.37°51'40"W., 153.19 feet; S.45°11'10"W., 343.45 feet; along a curve to the right having a radius of 610.00 feet a distance of 477.12 feet (the chord of said curve having bearing and distance of S.67°35'30"W., 465.05 feet); S.90°00'00"W., 908.90 feet; along a curve to the left having a radius of 490.00 feet a distance of 756.99 feet (said curve having bearing and distance of S.45°44'30"W., 683.93 feet; S.1°29'00"W., 131.82 feet; S.20°34'30"W., 52.20 feet; N.80°55'30"W., 20.41 feet to a westerly line of said Tract 1 on the west line of said Section 31; thence along the lines of said Tract 1 N.20°34'30"E., 52.91 feet; N.1°29'00"E., 128.45 feet; along a curve to the right having a radius of 510.00 feet a distance of 787.89 feet (the chord of said curve having bearing and distance of N.45°44'30"E., 711.84 feet); N.90°00'00"E., 908.90 feet; along a curve to the left having a radius of 590.00 feet a distance of 461.48 feet (the chord of said curve having bearing and distance of N.67°35'30"E., 449.80 feet); N.45°11'10"E., 342.17 feet; N.37°51'40"E., 150.42 feet; N.29°20'00"E., 285.45 feet; N.18°11'50"W., 231.31 feet; N.28°09'30"W., 179.45 feet; N.33°39'40"W., 406.67 feet to the south line of said Section 30; thence continuing along the lines of said Tract 1; N.33°39'40"W., 806.99 feet; along a curve to the right having a radius of 960.00 feet a distance of 580.26 feet (the chord of said curve having bearing and distance of N.16°20'40"W., 571.47 feet); N.0°58'20"E., 70.70 feet to the northwest line of a tract of land as shown in the survey as recorded in Book 601 at Page 308 of said Boone County Records; thence along said line S.44°45'30"E., 27.93 feet;

EXHIBIT "C"

thence leaving said line S.0°58'20"W., 51.21 feet; along a curve to the left having a radius of 940.00 feet a distance of 568.17 feet (the chord of said curve having bearing and distance of S.16°20'40"E., 559.56 feet); S.33°39'40"E., 820.20 feet to the POINT OF BEGINNING.

AND

Starting, for the second parcel, at the northeast corner of the northwest quarter (1/4) of Section 31, Township 47 North, Range 11 West; thence along the section line S.89°46'40"W., 1,023.90 feet to the POINT OF BEGINNNING on the westerly line of Tract 1 of the survey as recorded in Book 4492 at Page 46 of said Boone County Records, also being the westerly line of the permanent street easement granted this date; thence along the lines of said Tract 1 S.33°39'40"E., 459.67 feet; S.30°22'00"E., 61.40 feet; S.11°07'50"E., 274.75 feet; along a non-tangent curve to the right having a radius of 510.00 feet a distance of 362.20 feet (the chord of said curve having bearing and distance of S.24°50'20"W., 354.63 feet); S.45°11'10"W., 342.17 feet; along a curve to the right having a radius of 510.00 feet a distance of 398.90 feet (the chord of said curve having bearing and distance of S.67°35'30"W., 388.81 feet); S.90°00'00"W., 737.04 feet; S.86°40'10"W., 172.15 feet; along a non-tangent curve to the left having a radius of 580.00 feet a distance of 714.74 feet (said curve having bearing and distance of S.54°41'50"W., 670.37 feet) to the westerly line of said Tract 1 on the west line of said Section 31; thence along said Section line; N.1°24'50"E., 56.87 feet; thence along the lines of Tract 2 of said Survey along a curve to the right having a radius of 600.00 feet a distance of 684.63 feet (the chord of said curve having bearing and distance of N.57°15'20"E., 648.09 feet); N.86°40'10"E., 172.15 feet; N.90°00'00"E., 737.62 feet; along a curve to the left having a radius of 490.00 feet a distance of 383.26 feet (the chord of said curve having bearing and distance of N.67°35'30"E., 373.56 feet); N.45°11'10"E., 342.17 feet; along a curve to the left having a radius of 490.00 feet a distance of 345.28 feet (the chord of said curve having bearing and distance of N.25°00'00"E., 338.18 feet); N.11°07'50"W., 269.20 feet; N.30°22'00"W., 56.28 feet; N.33°39'40"W., 472.88 feet to the south line of said Section 30; thence continuing along the lines of said Tract 2; N.33°39'40"W., 740.95 feet; along a curve to the right having a radius of 1,060.00 feet a distance of 640.70 feet (the chord of said curve having bearing and distance of N.16°20'40"W., 631.00 feet); N.0°58'20"E., 897.00 feet to the south Right-of-Way line of Missouri State Route H: thence along said line S.88°58'30"E., 20.00 feet to the northwest corner of said Tract 1; thence along the lines of said easement S.0°58'20"W., 896.98 feet; along a curve to the left having a radius of 1,040.00 feet a distance of 628.62 feet (the chord of said curve having bearing and distance of S.16°20'40"E., 619.09 feet); S.33°39'40"E., 754.16 feet to the POINT OF BEGINNING.

The "Benefited Parties" referred to above herein shall be deemed to mean any public corporation, any public entity, any public water supply district, any utility cooperative, and any utility company regulated by the Missouri Public Service Commission, and said Benefited Parties shall have the right to use the easement area for the aforesaid purposes.

The parties agree that in the event the County or a Benefited Party installs utility lines or utility facilities in the above described easement area, such installation shall not materially interfere with any preexisting utility lines or utility facilities installed in the easement area by the County or a Benefited Party and that the provisions of this paragraph may be enforced by proceedings in law or in equity, or both, and in any said legal proceedings the prevailing party shall have the right to recover from the other party or parties all reasonable litigation expenses, including a reasonable attorney fee.

The parties agree that this easement may not be terminated or amended without the prior written consent of The County of Boone and each Benefited Party which has any utility lines or utility facilities located in the easement area at the time of the proposed termination or amendment.

Grantor agrees that it will not erect any building or structure on the easement area or permit the installation of any obstruction on the easement area which will interfere with the construction, placement, operation and maintenance of utility lines and facilities in the easement area.

The County of Boone and/or any Benefited Party shall have the right to trim, clear, cut and remove from the easement area any tree, brush, shrub, plant or other object of any kind which in the reasonable judgment of said party may interfere with the installation and/or maintenance of utility lines and utility facilities in the easement area.

IN WITNESS WHEREOF, the said City of Columbia, has caused these presents to be signed by its City, Manager Mike Matthes, the day and year first written above.

City of Columbia, a Municipal Corporation of the State of Missouri

_____
Mike Matthes, City Manager

Attest: _____
Sheela Amin,
City Clerk

STATE OF MISSOURI)
) SS.
COUNTY OF BOONE)

On this _____ day of _____, 2015 before me, a Notary Public in and for said state, personally appeared Mike Matthes, who being by me duly sworn, acknowledged that he is the City Manager of the City of Columbia, Missouri and the person described in and who executed the foregoing instrument, and acknowledged to me that he executed the same for the purposes therein stated on behalf of the City.

IN TESTIMONY WHEREOF, I have hereunto set my hand and affixed my official seal, at my office in the County aforesaid, the day and year first above written.

_____
Notary Public

CONSOLIDATED PUBLIC WATER SUPPLY DISTRICT NO. 1 OF BOONE COUNTY, MISSOURI

1500 North Seventh Street
Columbia, Missouri 65201

WATER LINE EASEMENT

KNOW ALL PERSONS BY THESE PRESENTS:

That on this _____ day of _____, 2015, THE CITY OF COLUMBIA, a Municipal Corporation of the State of Missouri, hereinafter referred to as GRANTOR (herein so styled, whether one or more), for and in consideration of the sum of Ten Dollars $10.00 and other valuable consideration, paid and delivered by CONSOLIDATED PUBLIC WATER SUPPLY DISTRICT NO.1 of Boone County, Missouri, hereinafter referred to as the Grantee, organized under the laws of the State of Missouri; the receipt of which is hereby acknowledged, hereby Grants, Bargains, Sells and Conveys to said Grantee the perpetual easement and right to enter upon the lands of Grantor situated in the County of Boone, State of Missouri, described as follows:

A parcel of land in the west part of a tract of land described in warranty deed in Book 514 at Page 491, said tract also being described in the survey in Book 368 at Page 20, both of the Boone County Records; situate in the southwest quarter (1/4) of Section 31, Township 47 North, Range 11 West, Boone County, Missouri; said parcel being described as follows:
Starting at the northeast corner of the northwest quarter (1/4) of said Section 31; thence along the section line S.89°46'40"W., 2847.78 feet to the northwest corner of said Section 31; thence along the west line of said Section S.1°24'50"W., 1,498.61 feet; thence leaving said line S.83°45'50"E., 182.43 feet to the POINT OF BEGINNING on a northwesterly line of Tract 2 of the survey as recorded in Book 4492 at Page 46 of said Boone County Records, said line also being a northwesterly line of the permanent utility easement granted this date, at a point along a non-tangent curve to the right having a radius of 600.00 feet a distance of 301.46 feet (the chord of said curve having bearing and distance of N.38°57'40"E., 298.30 feet) from a westerly corner of said Tract 2; thence N.83°45'50"W., 138.39 feet; thence N.2°32'20"E., 20.04 feet; thence S.83°45'50"E., 162.34 feet to said northwesterly line; thence along said line along a non-tangent curve to the left having a radius of 600 feet a distance of 30.22 feet (the chord of said curve having bearing and distance of S.54°47'50"W., 30.22 feet) to the POINT OF BEGINNING.

and to initially and at all times thereafter erect, construct, install, lay, operate, survey, inspect, maintain, repair, rebuild, upgrade, replace, enlarge, remove and patrol on over or under said lands, and in and upon all streets, roads, or highways abutting said lands one or more pipes of any size for the transmission of water, and all appliances necessary in connection therewith, including but not limited to water meter pits, water meters, water meter yokes, water valves, air release valves, water pressure regulators, detection wires and fire hydrants, together with the perpetual right to go in and upon said land for said purposes. The water line easement hereby granted shall be:

A parcel of land in the west part of a tract of land described in warranty deed in Book 514 at Page 491, said tract also being described in the survey in Book 368 at Page 20, both of the Boone County Records; situate in the southwest quarter (1/4) of Section 31, Township 47 North, Range 11 West, Boone County, Missouri; said parcel being described as follows:
Starting at the northeast corner of the northwest quarter (1/4) of said Section 31; thence along the section line S.89°46'40"W., 2847.78 feet to the northwest corner of said Section 31; thence along the west line of said Section S.1°24'50"W., 1,498.61 feet; thence leaving said line S.83°45'50"E., 182.43 feet to the POINT OF BEGINNING on a northwesterly line of Tract 2 of the survey as recorded in Book 4492 at Page 46 of said Boone County Records, said line also being a northwesterly line of the permanent utility easement granted this date, at a point along a non-tangent curve to the right having a radius of 600.00 feet a distance of 301.46 feet (the chord of said curve having bearing and distance of N.38°57'40"E., 298.30 feet) from a westerly corner of said Tract 2; thence N.83°45'50"W., 138.39 feet; thence N.2°32'20"E., 20.04 feet; thence S.83°45'50"E., 162.34 feet to

EXHIBIT "D"

said northwesterly line; thence along said line along a non-tangent curve to the left having a radius of 600 feet a distance of 30.22 feet (the chord of said curve having bearing and distance of S.54°47'50"W., 30.22 feet) to the POINT OF BEGINNING.

To have and to hold said easement and rights unto said Grantee forever.
It is understood and agreed that the consideration herein stated shall be the full consideration due to Grantor from said Grantee for going upon said lands and laying of said water pipe line and facilities.

Title to said water pipe line shall be and remain in said Grantee.

Grantor covenants to and with said Grantee that subject to existing easements, if any, for public highways or roads, railroads, laterals, ditches, pipelines and electrical transmission or distribution lines and telephone and telegraph lines covering the land herein described, Grantor is lawfully seized and possessed of said lands, has a good and lawful right and power to sell and convey them and that they are free and clear of all liens and encumbrances, except as herein stated and that Grantor will forever warrant and defend the title to said easement and the quiet possession thereof against the lawful claims and demands of all persons whomsoever.

IN WITNESS WHEREOF, the undersigned has executed this document this _____ day of _____, 2015.

CITY OF COLUMBIA, MISSOURI, a Municipal Corporation

BY: _____
Mike Matthes,
City Manager

ATTEST: _____
Sheela Amin,
City Clerk

STATE OF MISSOURI)
) SS.
COUNTY OF BOONE)

On this _____ day of _____, 2015 before me, a Notary Public in and for said state, personally appeared Mike Matthes, who being by me duly sworn, acknowledged that he is the City Manager of the City of Columbia, Missouri and person described in and who executed the foregoing instrument, and acknowledged to me that he executed the same for the purposes therein stated on behalf of the City.

IN TESTIMONY WHEREOF, I have hereunto set my hand and affixed my official seal, at my office in the county aforesaid, the day and year first above written.

My commission expires: _____

_____
Notary Public

Introduced by _____

First Reading _____ Second Reading _____

Ordinance No. _____ Council Bill No. _____B 287-15_____

AN ORDINANCE

authorizing a waterline replacement contract with Consolidated Public Water Supply District No. 1 of Boone County, Missouri relating to the relocation of a portion of Rangeline Road as part of the Runway 13/31 extension project at Columbia Regional Airport; and fixing the time when this ordinance shall become effective.

BE IT ORDAINED BY THE COUNCIL OF THE CITY OF COLUMBIA, MISSOURI, AS FOLLOWS:

SECTION 1. The City Manager is hereby authorized to execute a waterline replacement contract with Consolidated Public Water Supply District No. 1 of Boone County, Missouri relating to the relocation of a portion of Rangeline Road as part of the Runway 13/31 extension project at Columbia Regional Airport. The form and content of the agreement shall be substantially in the same form as set forth in "Exhibit A" attached hereto.

SECTION 2. This ordinance shall be in full force and effect from and after its passage.

PASSED this _____ day of _____, 2015.

ATTEST:

_____ _____

City Clerk Mayor and Presiding Officer

APPROVED AS TO FORM:

_____

City Counselor

Exhibit A

COPY

WATERLINE REPLACEMENT CONTRACT
(Relocation of Rangeline Road @ Columbia Regional Airport)

THIS CONTRACT, made and entered into this _____ day of _____, 2015, by and between the CITY OF COLUMBIA, MISSOURI, a municipal corporation, hereinafter called "CITY," and CONSOLIDATED PUBLIC WATER SUPPLY DISTRICT NO. 1 OF BOONE COUNTY, MISSOURI, a Missouri public corporation, hereinafter called "DISTRICT:"

W I T N E S S E T H:

WHEREAS, the CITY has prepared plans for Road Improvements to be made in the Rangeline Road right-of-way (herein "Road Improvements"); and

WHEREAS, in connection with the aforesaid Road Improvements the parties desire to agree to the provisions contained herein in regard to replacing, relocating and abandoning portions of the existing waterlines of the DISTRICT.

NOW, THEREFORE, in consideration of the respective covenants of the parties and other valuable consideration, the receipt and sufficiency of which are hereby acknowledged, the undersigned do hereby mutually agree as follows:

1. REPLACEMENT: That in connection with making the aforesaid Road Improvements the CITY shall at CITY'S expense perform the following work:

a) Install a new three inch (3") waterline commencing at STA. 3+09 of Rangeline Road Relocation Plans and extending to STA. 55+00 connecting to the existing DISTRICT waterline at or near STA. 55+00 and PT STA. 151+52 17;

The aforesaid work shall be performed in accordance with the plans attached hereto as Exhibit "A" and in accordance with the specifications attached hereto as Exhibit "B."

2. EASEMENTS: That before commencing the aforesaid work, CITY shall procure execution of the original copy of the Easement for Utility Purposes attached hereto as Exhibit "C" and record the same in the office of the Recorder of Deeds of Boone County, Missouri. CITY agrees that it will not execute any document terminating or amending the aforesaid easement before the work

specified herein has been completed without the prior written consent of DISTRICT.

3. INSPECTION: CITY agrees to give to DISTRICT not less than seventy-two (72) hours prior written notice of CITY'S intention to perform work in replacing the aforesaid waterlines and DISTRICT shall have the right to have a representative present to inspect the replacement work as the same is being done.

4. DISTRICT COST: That the CITY shall pay to DISTRICT all engineering fees, attorney fees and other reasonable costs and expenses incurred by DISTRICT in connection with the matters referred to herein and CITY shall pay said amount to DISTRICT upon being furnished with an itemized list of said costs and expenses, the total amount of said costs and expenses shall not exceed the sum of $10,000.00.

5. WATER SERVICE DISRUPTION: CITY agrees that in performing the aforesaid work CITY will perform said work in such a manner as to minimize the disruption of water service to the customers of the DISTRICT.

6. WATERLINE TESTING: DISTRICT will furnish water to the aforesaid waterlines in connection with flushing and testing said waterlines in accordance with the rules and regulations of the Missouri Department of Natural Resources.

7. OWNERSHIP: That upon completion of the aforesaid work in accordance with the provisions contained herein the aforesaid replaced waterlines shall be deemed transferred to and become the waterlines of the DISTRICT.

8. CORRECTIVE WORK: CITY shall promptly give DISTRICT written notice of when the Rangeline Road project has been completed. CITY shall repair or replace at CITY'S expense any defective work or materials installed under this Contract which arise or become apparent within one (1) year after the completion of the aforesaid Road Improvements and in addition CITY shall perform such backfilling work, erosion control work and cleanup work which the DISTRICT determines is needed within one (1) year after the Road Improvements have been completed. CITY agrees to indemnify and hold DISTRICT harmless from any loss or damage arising out of or resulting from the failure of the CITY to perform when due its obligations under

this paragraph provided that DISTRICT notifies CITY of such loss or damage within one (1) year of completion of the Rangeline Road project.

9. ENFORCEMENT IN EQUITY: It is agreed that in the event of any controversy concerning the rights or obligations of the parties hereto under this contract, such rights or obligations may be enforceable in law or in equity, or both; provided however, such remedies shall be cumulative and not exclusive, and shall be in addition to any other remedies which the parties may have.

10. LITIGATION EXPENSES: In the event of any litigation between the parties in regard to the provisions of this contract, the prevailing party in said litigation shall have the right to recover from the other party all reasonable litigation expenses including a reasonable attorney fee.

11. JURISDICTION AND VENUE: The jurisdiction and venue of any dispute under the terms of this contract shall be in the Circuit Court of Boone County, Missouri.

12. SUCCESSORS AND ASSIGNS: This contract shall be binding upon the parties hereto and their successors and assigns.

IN WITNESS WHEREOF, the parties have hereunto executed this contract the day and year first above written.

CITY:

CITY OF COLUMBIA, MISSOURI

BY: _____
MIKE MATTHES, City Manager

ATTEST:

_____
SHEELA AMIN, City Clerk

APPROVED AS TO FORM:

_____
NANCY THOMPSON, City Counselor

DISTRICT:

CONSOLIDATED PUBLIC WATER SUPPLY DISTRICT NO. 1 OF BOONE COUNTY, MISSOURI

BY: _____
JEROME GLASCOCK, President

ATTEST:

_____
JANET SEARS, Clerk

STATE OF MISSOURI)
) SS.
COUNTY OF BOONE)

On this _____ day of _____, 2015, before me appeared MIKE MATTHES, to be personally known, who, being by me duly sworn, did say that he is the City Manager of the City of Columbia, Missouri, and that the seal affixed to the foregoing instrument is the corporate seal of the City and that this instrument was signed and sealed on behalf of the City by authority of its City Council and the City Manager acknowledged this instrument to be the free act and deed of the City.

IN TESTIMONY WHEREOF, I have hereunto set my hand and affixed my official seal, at my office in Columbia, Missouri, the day and year first above written.

My commission expires:

_____

_____
Notary Public

STATE OF MISSOURI)
) SS.
COUNTY OF BOONE)

On this _____ day of _____, 2015, before me appeared JEROME GLASCOCK, to me personally known, who, being by me duly sworn, did say that he is the President of CONSOLIDATED PUBLIC WATER SUPPLY DISTRICT NO. 1 OF BOONE COUNTY, MISSOURI, a Missouri public corporation, and that the seal affixed to the foregoing instrument is the corporate seal of said corporation and that said instrument was signed and sealed in behalf of said corporation by authority of its Board of Directors and the said President acknowledged said instrument to be the free act and deed of said corporation.

IN TESTIMONY WHEREOF, I have hereunto set my hand and affixed my official seal, at my office in Columbia, Missouri, the day and year first above written.

My commission expires:

_____

_____
Notary Public

EXHIBIT "A"

FINAL PLANS (100%)

City of Columbia, Missouri

Department of Public Works

COLUMBIA Regional Airport

RANGELINE ROAD

RELOCATION OF RANGELINE ROAD AT COLUMBIA REGIONAL AIRPORT

RFQ: 119/2015

AIP NO. 3-29-0022-37/41

BMCD PROJ. NO. 61847

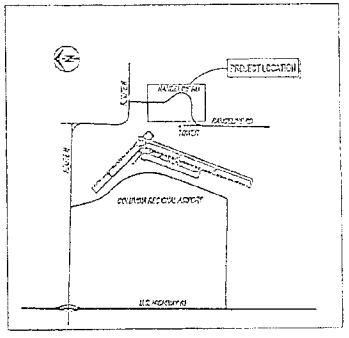

LOCATION MAP
(NOT TO SCALE)

GENERAL NOTES

1. All road constructed to be in accordance with "Boone County Construction & Material & Specifications and Standards" (Current edition) and the Project Special Provisions.

2. Known underground utilities are shown in their approximate locations. Other utilities may exist.

3. All removal of driveway pavements should be verified by field engineer.

4. All excavation to be in accordance with specifications. Such compliance shall not, however, relieve any person making any excavation from doing so in a careful and prudent manner, nor shall it excuse such person from liability for any damage or injury to underground utilities resulting from the excavation.

5. All RCP is Class III unless otherwise indicated.

6. All disturbed earth areas shall be restored as per the specifications.

7. Repair all pavement surfaces, inlets, pipes and sidewalks within the construction limits as per the specifications except those noted to remain. The field inspector shall verify removal of all driveway pavement.

8. Removal of trees and bushes shall be verified by field inspector. Exercise caution when working near the construction limits to minimize disturbance to adjacent trees and shrubs that are not being removed by construction activities.

9. No open trenches will be allowed overnight outside of the "road closed" area. Asphaltic "cold mix" shall be used as a temporary patch over trench. Temporary patching shall be considered incidental to the work.

TRAVERSE POINTS:

No.	Northing	Easting	Elevation	Description
CP2	1098553.29	1723280.95	891.21	Iron
CP4	1098228.15	1723280.45	892.73	Iron
CP11	1096700.63	1723149.07	878.03	Iron
CP12	1096533.05	1723147.66	872.72	Iron
CP13	1095429.14	1723073.09	892.74	Iron
CP14	1095268.64	1723063.50	891.54	Iron
CP15	1095382.49	1722957.43	873.17	Iron
CP17	1093796.51	1722875.75	877.41	Iron
CP20	1090591.76	1723016.56	877.37	Iron
CP21	1090513.23	1723458.27	861.74	Iron

BENCHMARKS:

BM1 - ELEV. 894.87

BM2 - ELEV. 881.24

BM3 - ELEV. 882.49

DESIGN DATA:

Design Speed	30mph(min.)
Functional Classification	Local
Construction Beginning Station	9+10.00
Completion Ending Station	54+00.00
Project Length	5,297.40 LF

CONSOLIDATED PUBLIC WATER DISTRICT NO. 1 GENERAL CONSTRUCTION NOTES

General

1. No work shall be started without notifying CPWSD Boone No. 1 at least 72 hours in advance at (573) 449-8703.

2. Contractor shall obtain a Boone County permit from public works, where required.

3. District will obtain a MoDOT permit, where applic. Any other permits are contractor's responsibility.

4. Contractor is responsible to have all utilities within project area located in the field prior to construction. Contact Missouri One Call System at 1-800-DIG-RITE or 811.

5. Water line alignment to be placed by contractor. Variance from approved alignment must be approved by water district prior to installation.

Installation

6. Minimum cover on water line shall be 48", unless otherwise noted.

7. Locator wire shall be installed on all pipe including service crossings. Two strands of tracer wire need be installed on highway bores and creek crossings.

8. Maintain 10" of horizontal and 18" of vertical separation between water lines and non-potable lines.

9. Contractor to confirm all service crossings, as required.

10. Concrete thrust blocking forms to be approved by district inspector before pouring blocking. Concrete blocks or sprockrete shall not be allowed.

11. All lines to be placed, disinfected and pressure tested prior to connecting to existing mains. Temporary blowoffs, flush valves, etc. will be the contractor's responsibility for installation and removal, as necessary.

12. Trench backfill under private road crossings shall be 1" clean rock. Trench backfill for private driveways and county roads shall be 1" compacted surface rock.

13. Tie-ins or wet tap tie-ins shall be made only after contractor or individual has coordinated and acquired prior approval from CPWSD Boone No. 1, as to:
a) Actual time of day service will be disrupted.
b) Method of tie-in and material have been approved by district inspector.
c) All materials needed for tie-in on site and assembled as far as possible.
d) No tie-ins to be scheduled on holidays, district paid holidays or weekends.

14. Contractor to cleanup, seed and mulch as per project specifications.

15. Fittings to be mechanical joint ductile iron. Per fittings greater than 3" will not be allowed.

16. All pipes with open ends indicated for abandonment shall be capped.

17. Valves to be abandoned will remove the riser to at least 12" below the ground. The lid will be given to the water district.

18. Tees with anchor couplings may be used in lieu of anchor tees shown on the plans.

19. Use of 3/4" all-thread stainless steel tie-back rods may be approved by the district inspector in place of all anchor couplings.

UTILITY COMPANIES:

ELECTRIC
Boone Electric Cooperative
1413 Range Line Street
Columbus, MO 65201
573-449-4131 ext. 221

LOCATES
Missouri One Call Inc.
1070 N Southridge Drive
Jefferson City, MO 65109
1-800-344-7483

INDEX OF SHEETS

Description	Sheet No.
Cover Sheet	1
Typical Section Sheet	2
Plan / Profile Sheets	3-14
Erosion Control Plans / Details	15-23
Traffic Control Plans / Details	24-26
Fence Details	27-30
Roadway Cross Sections	31-60
Consolidated Water Construction Details	1-4

LEGEND OF SYMBOLS & ABBREVIATIONS

City of Columbia, Missouri
Department of Public Works

No.	Date	By	Revision

Dsn. D.M.C. Dwn. D.M.C. Chk. D.A.H. Sheet 1 of 60

Scale: None
Date: 05/28/15

Digitally signed 06/02/15

RANGELINE RAILROAD

Approved By
Director of Public Works
Date: June 2 2015

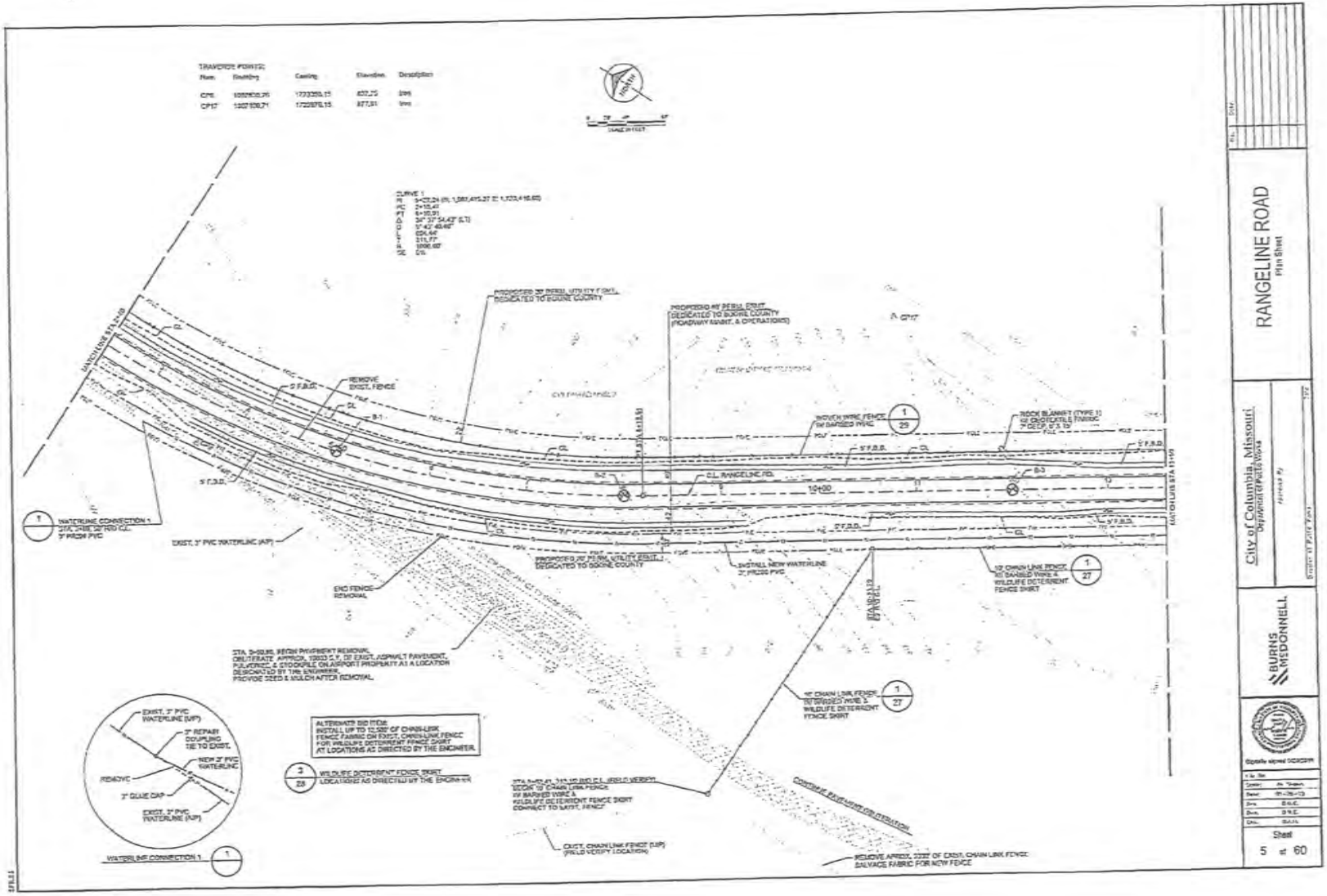

RANGELINE ROAD
Plan Sheet

City of Columbia, Missouri
Department of Public Works

BURNS & McDONNELL

Sheet
5 of 60

TRAVERSE POINTS:

Name	Northing	Easting	Elevation	Description
CP12	1096820.55	1723647.83	877.73	Iron
CP20	1096801.76	1724896.16	872.37	Iron
CP21	1096113.23	1724459.87	851.74	Iron

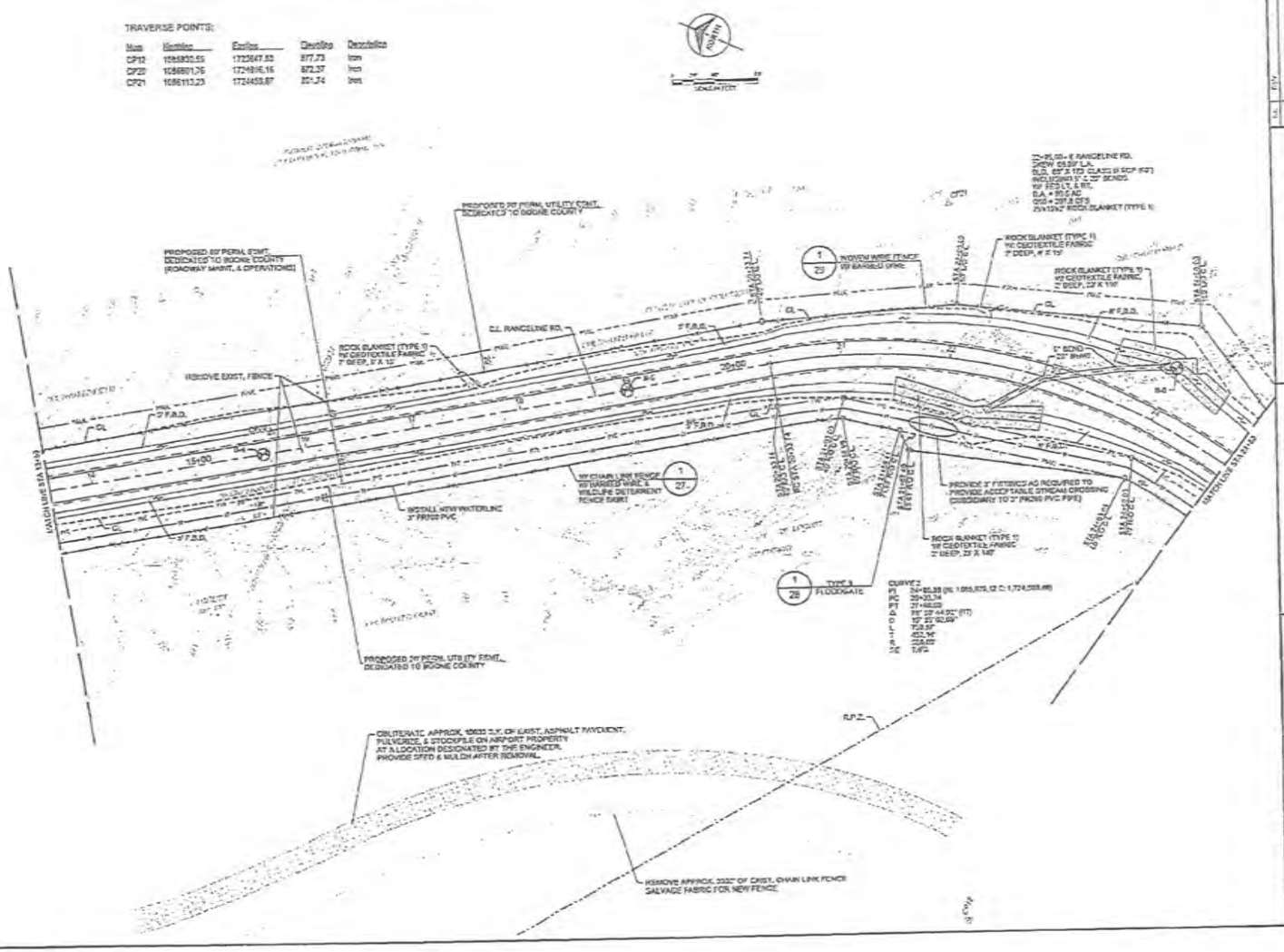

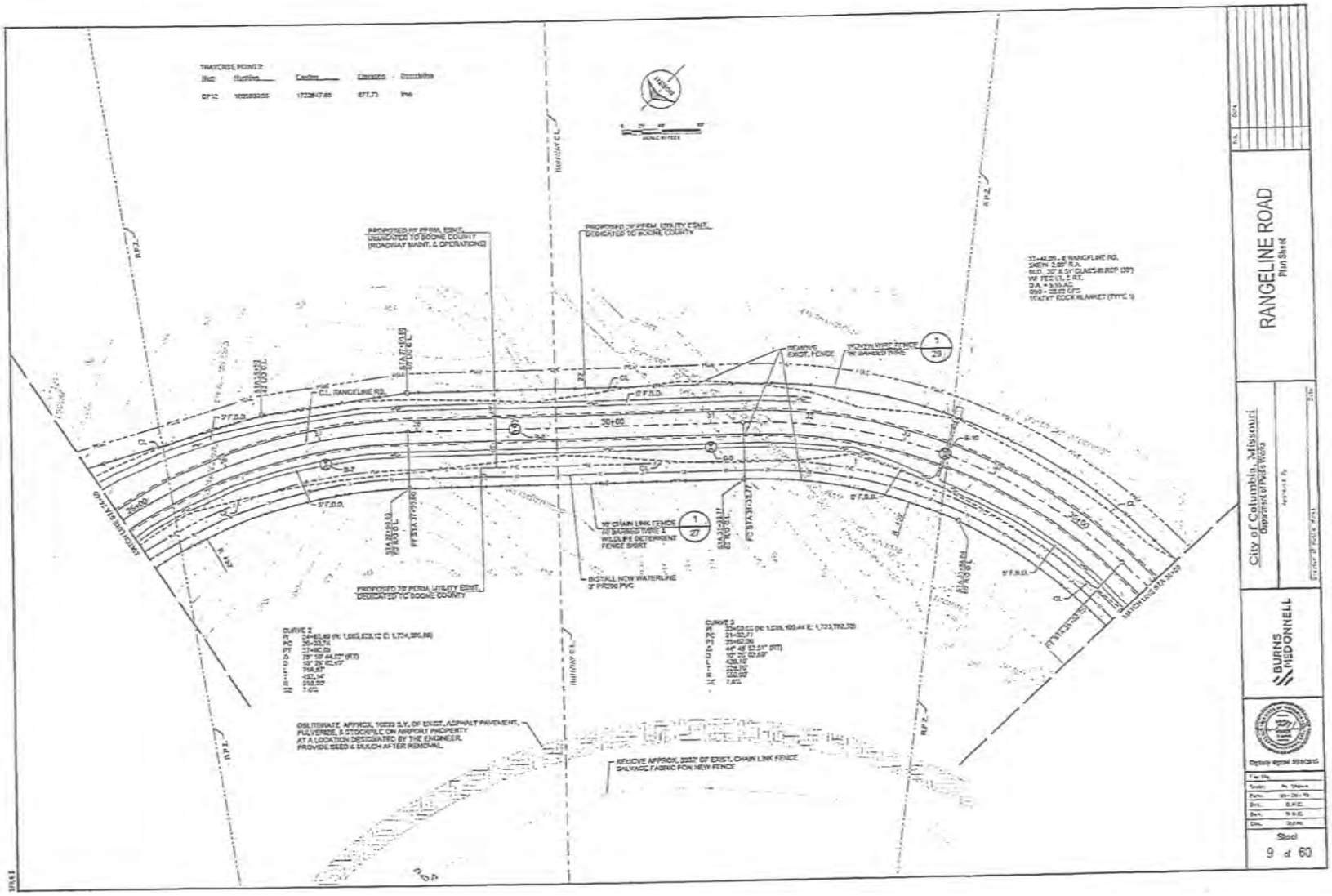
RANGELINE ROAD
Plan Sheet
City of Columbia, Missouri
Department of Public Works
BURNS McDONNELL
Sheet
9 of 60
PROPOSED 70' PERM. EDMT. DEDICATED TO BOONE COUNTY (ROADWAY MAINT. & OPERATIONS)
PROPOSED 70' PERM. UTILITY EDMT. DEDICATED TO BOONE COUNTY
PROPOSED 20' PERM. UTILITY EDMT. DEDICATED 20' TO BOONE COUNTY
CL RANGELINE RD.
REMOVE EXIST. FENCE
WOVEN WIRE FENCE (W/ BARBED WIRE)
1
29
1
27
INSTALL NEW WATERLINE 2" HPDE PVC
OBLITERATE, APPROX. 1000 S.Y. OF EXIST. ASPHALT PAVEMENT, PULVERIZE, & STOCKPILE ON AIRPORT PROPERTY AT A LOCATION DESIGNATED BY THE ENGINEER. PROVIDE SEED & MULCH AFTER REMOVAL
REMOVE APPROX. 2000' OF EXIST. CHAIN LINK FENCE SALVAGE FABRIC FOR NEW FENCE
RIVER CL
R.P.Z.
MISSOURI 124 ROAD
MISSOURI 124 ROAD

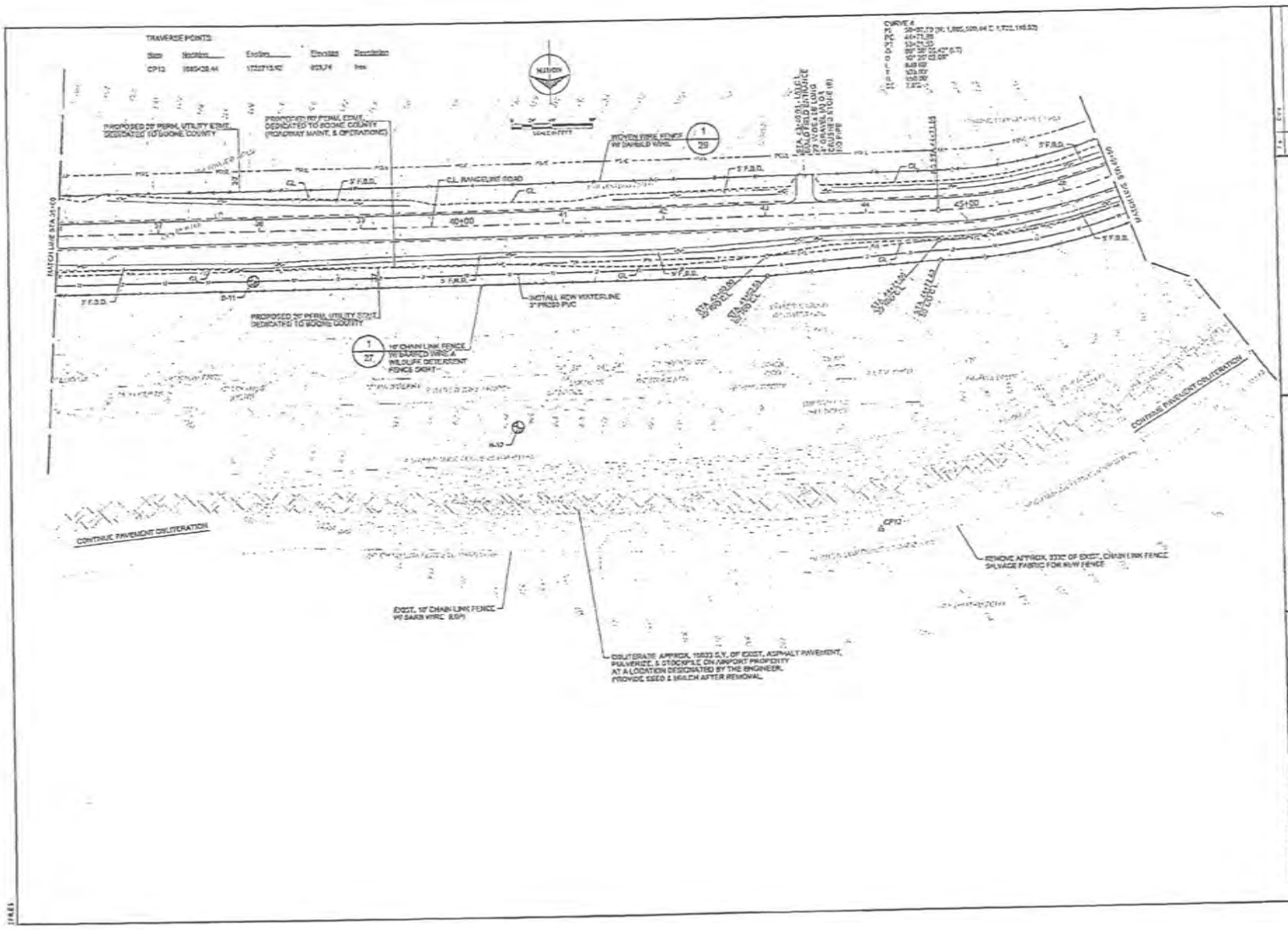
TRAVERSE POINTS
CP12
CURVE 4
PROPOSED 20' PERM. UTILITY ESMT. DEDICATED TO BOONE COUNTY
PROPOSED 60' PERM. ESMT. DEDICATED TO BOONE COUNTY (ROADWAY MAINT. & OPERATIONS)
C.L. RANGELINE ROAD
5' F.B.D.
MATCH LINE STA 31+00
40+00
45+00
B-11
INSTALL ROW MIXTURE 3" PRCSD PVC
PROPOSED 20' PERM. UTILITY ESMT. DEDICATED TO BOONE COUNTY
10' CHAIN LINK FENCE W/ BARBED WIRE & WILDLIFE DETERRENT FENCE SKIRT
CONTINUE PAVEMENT OBLITERATION
EXIST. 10' CHAIN LINK FENCE W/ BARB WIRE (ESP)
OBLITERATE APPROX. 1563 S.Y. OF EXIST. ASPHALT PAVEMENT, PULVERIZE, & STOCKPILE ON AIRPORT PROPERTY AT A LOCATION DESIGNATED BY THE ENGINEER. PROVIDE SEED & MULCH AFTER REMOVAL
REMOVE APPROX. 2332' OF EXIST. CHAIN LINK FENCE SALVAGE FABRIC FOR ROW FENCE
CONTINUE PAVEMENT OBLITERATION
RANGELINE ROAD
Plan Sheet
City of Columbia, Missouri
Department of Public Works
BURNS McDONNELL
Sheet
11 of 60

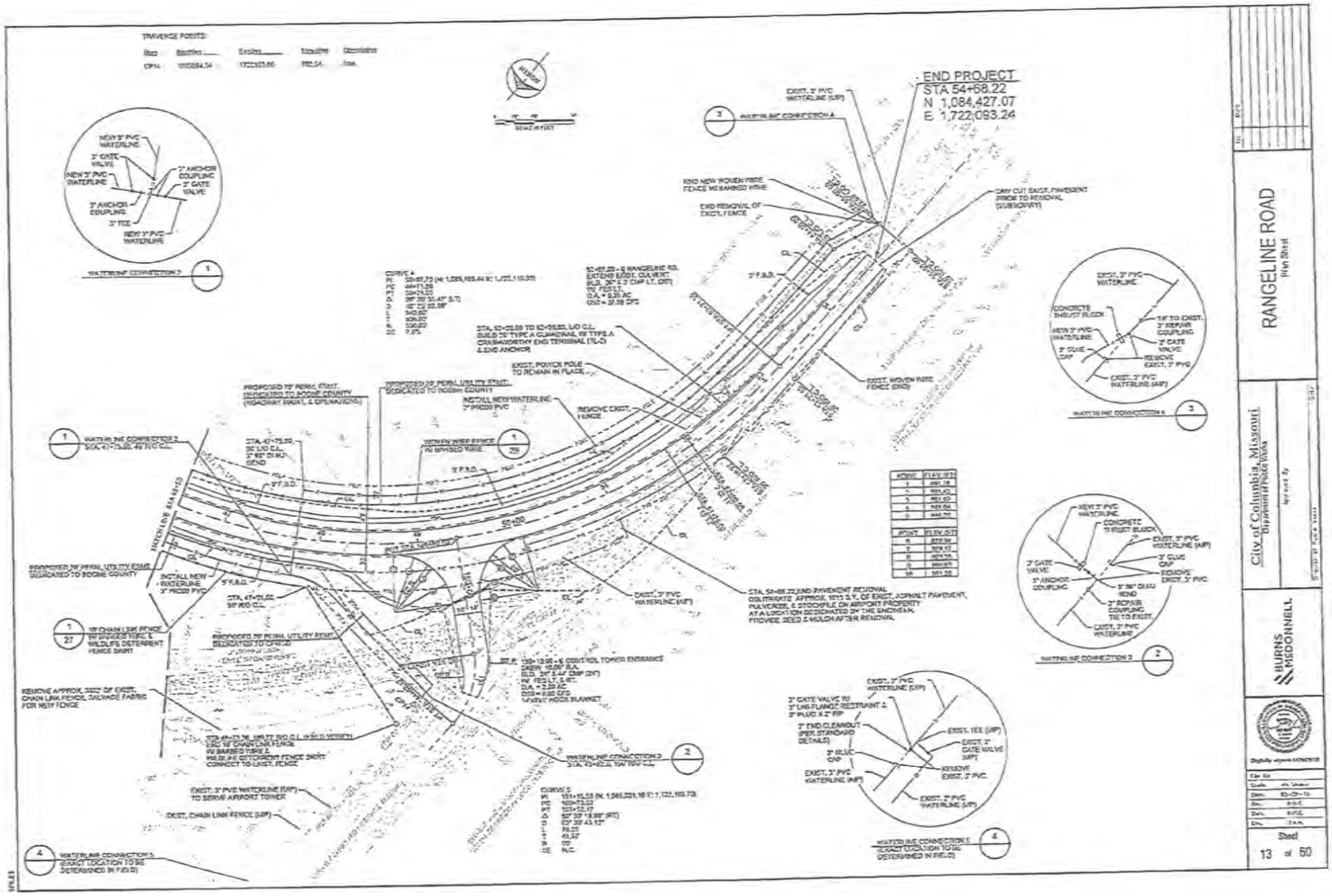
END PROJECT
STA 54+68.22
N 1,084,427.07
E 1,722,093.24
RANGELINE ROAD
Plan Sheet
City of Columbia, Missouri
Department of Public Works
BURNS McDONNELL
Sheet
13 of 60

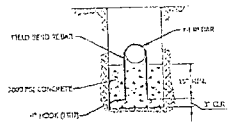

HAIRPIN REBAR DETAIL

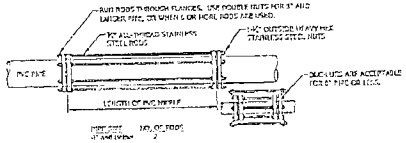

PIPE SIZE	NO. OF RODS
3" AND UNDER	2
4" - 6"	4
8" - 10"	6
12" - 18"	8
20" - 24"	12

TIEBACK RODS MAY BE ATTACHED TO: BELL FITTINGS, VALVES, HYDRANTS, AND CONCRETE RESTRAINING BLOCKS.

TIEBACK ROD DETAIL

TIEBACK ROD & HAIRPIN REBAR DETAILS

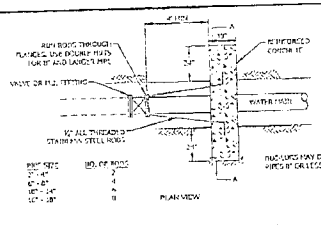

PIPE SIZE	NO. OF RODS
3" - 4"	2
6" - 8"	4
10" - 14"	6
16" - 18"	8
20" - 24"	12

NOTE:
REBAR TO HAVE 3" CLEARANCE FROM ALL RODS

RESTRAINING BLOCK DETAIL

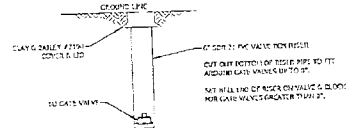

GENERAL NOTES:

1. ANCHOR COUPLING OR PVC PIPE WITH TIEBACK RODS WILL BE REQUIRED BETWEEN VALVE AND FITTINGS.
2. WRAP VALVE AND JOINTS WITH VISQUEEN.
3. VALVE AND FITTINGS SHALL BE PAINTED AND ENCOVED BY A LEVEL.

GATE VALVE AND VALVE BOX DETAIL

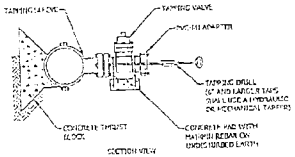

TAPPING SLEEVE AND VALVE ASSEMBLY

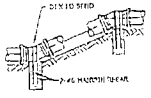

VERTICAL THRUST BLOCKS										
Pipe	Min. Vertical Bearing Area						Min. Bearing Area			
Size	11.25	22.5	45	90	11.25	22.5	45	90
(in)	(cy)	(cy)	(cy)	(cy)	(sf)	(sf)	(sf)	(sf)
4	0.2	0.4	0.7	1.6	0.0	0.1	0.6	2.0
6	0.4	0.8	1.5	3.1	0.1	0.3	1.3	4.3
8	0.7	1.4	2.7	5.5	0.1	0.5	2.3	7.7
10	1.1	2.1	4.2	8.5	0.2	0.8	3.5	11.9
12	1.5	3.0	5.9	11.7	0.3	1.1	4.8	16.2

VERTICAL RODS THRUST BLOCK DETAIL

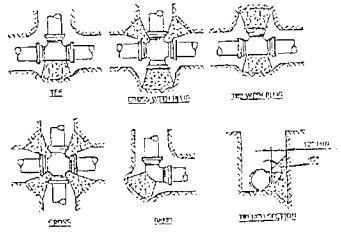

HORIZONTAL THRUST BLOCKS							
PIPE	Minimum Bearing Area						
Size	11.25	22.5	45	90	Tee/Plug*	Cross*
(in)	(sq)	(sq)	(sq)	(sq)	(sq)	(sq)
4	0.4	0.8	1.5	2.9	2.6	4.9
6	0.8	1.7	3.2	6.2	4.2	8.1
8	1.4	2.8	5.5	10.7	7.2	14.1
10	2.2	4.4	8.6	16.6	11.1	22.0
12	3.1	6.1	12.0	23.2	15.7	31.1
14	3.7	7.4	14.5	28.1	18.9	37.5
16	4.8	9.6	18.8	36.9	24.7	49.0

* Use at dead ends

HORIZONTAL RODS THRUST BLOCK DETAIL

1. THRUST BLOCKS SHALL BE FORMED AND POURED AGAINST UNDISTURBED SOIL. KEEP PIPE JOINTS CLEAR OF CONCRETE, WRAPPED IN 8 MIL MINIMUM PLASTIC PROTECTION.
2. THICKNESS BETWEEN FITTING AND SOIL SHALL BE A MINIMUM OF 12".
3. CONCRETE SHALL HAVE 3000 PSI MINIMUM COMPRESSIVE STRENGTH.
4. PLUGS SHALL BE WRAPPED WITH BELL VISQUEEN.

THRUST BLOCKING DETAIL

GENERAL CONSTRUCTION NOTES

GENERAL

1. THE WORK SHALL BE STARTED WITHIN 48 HOURS (CONSIDER WORK DAYS) AT LEAST 72 HOURS IN ADVANCE AT (573) 419-6021.
2. CONTRACTOR SHALL OBTAIN A BOONE COUNTY PERMIT FROM PUBLIC WORKS, WHICH REQUIRED.
3. CONTRACTOR WILL OBTAIN A MISSOURI PERMIT, WHICH REQUIRED. ANY OTHER PERMITS ARE CONTRACTOR'S RESPONSIBILITY.
4. CONTRACTOR IS RESPONSIBLE TO HAVE ALL UTILITIES WITHIN PROJECT AREA LOCATED BEFORE THE FIELD PRIOR TO CONSTRUCTION. CONTACT MISSOURI ONE CALL STARTING AT 1-800-DIG-RITE OR 811.
5. WATER LINE ASSUMED TO BE STAKED BY _____. VARIANCE FROM APPROVED ALIGNMENT MUST BE APPROVED BY NORTH DISTRICT PRIOR TO INSTALLATION.

INSTALLATION

6. MINIMUM COVER ON WATER LINE SHALL BE 48", UNLESS OTHERWISE NOTED.
7. LOCATOR WIRE SHALL BE INSTALLED ON ALL PIPE INCLUDING SERVICE CONNECTIONS. TWO STRANDS OF LOCATOR WIRE SHALL BE INSTALLED ON REGULAR SERVICE AND CREEK CROSSINGS.
8. MINIMUM 18" OF HORIZONTAL AND 18" OF VERTICAL SEPARATION BETWEEN WATER LINES AND NON-POTABLE LINES.
9. CONTRACTOR TO DEPOSIT ALL SURPLUS DEBRIS/SOIL AS REQUIRED.
10. CONCRETE THRUST BLOCKING FORMS TO BE APPROVED BY CONTRACT INSPECTOR BEFORE FOR USING IN BOXES. CONCRETE BLOCKS OR CONCRETE SHALL NOT BE ALLOWED.
11. ALL LINES TO BE FLUSHED, DISINFECTED AND PARTIALLY TESTED PRIOR TO CONNECTING TO EXISTING MAIN. TEMPORARY BLOCKOUTS, FLUSH VALVES, ETC. WILL BE THE CONTRACTORS RESPONSIBILITY FOR INSTALLATION AND REMOVAL AS NECESSARY.
12. TRENCH BACKFILL UNDER PRIVATE ROAD CROSSINGS SHALL BE 1" CLEAN ROCK. TRENCH BACKFILL FOR PRIVATE DRIVEWAYS AND COUNTY ROADS SHALL BE 6" COMPACTED SURVEY ROCK.
13. TEE AND/OR VALVE TAP TIE-INS SHALL BE MADE ONLY AFTER CONTRACTOR OR INDIVIDUAL HAS CONFIRMED WITH AND AGREED PRIOR APPROVAL FROM COUNCIL BOARD NO. 1 AS TO:

A) ACTUAL TYPE OF GAS SERVICE WILL BE DEPLOYED.
B) METHOD OF TIE-IN AND MATERIAL HAVE BEEN APPROVED BY DISTRICT INSPECTOR.
C) ALL MATERIALS NEEDED FOR THE TIE-IN OPERATION ARE ACCUMULATED AS FAR AS POSSIBLE.
D) NO THE NO TIE-IN SCHEDULED ON HOLIDAYS, DISTRICT PAID HOLIDAYS, OR WEEKENDS.

14. CONTRACTOR TO DRAIN, SEED AND MULCH AS PER PROJECT SPECIFICATIONS.
15. ALL PIPES WITH OPEN ENDS INDICATED FOR ABANDONMENT SHALL BE CAPPED.
16. VALVES TO BE ABANDONED WILL REMAIN THE RISER TO AT LEAST 12" BELOW THE GROUND. THE LID WILL BE CLOSED TO THE WATER DISTRICT.
17. FITTINGS TO BE MITER MECHANICAL JOINT DUCTILE IRON. THE FITTINGS GREATER THAN 12" WILL NOT BE ALLOWED.
18. TEES WITH ANCHOR COUPLINGS MAY BE USED IN LIEU OF AND OR TEES SHOWN ON THE PLANS.
19. USE 0.375" ALL-THREAD STAINLESS STEEL TIE ROD RODS THAT BE APPROVED BY THE DISTRICT INSPECTOR IN PLACE OF 0.5" ANCHOR COUPLINGS.

STANDARD CONSTRUCTION DETAILS

BARTLETT & WEST

CONSOLIDATED WATER — Boone County, Missouri

JOB NO. 2015-1

DATE: JUNE 2015

CONTRACT NO.: 1

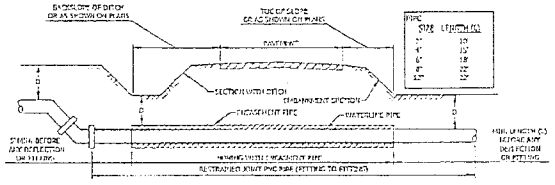

"50'-40" FOR STEEL ENCASEMENT AND 72" FOR HDPE ENCASEMENT UNLESS OTHERWISE SPECIFIED

NOTES:
1. CASING TYPE, SIZE AND THICKNESS TO BE DETERMINED BY PERMITTING AGENCY OR OWNER ON PLANS.
2. REFER TO ENCASEMENT DETAIL FOR SPACER AND END SEAL INSTALLATION.
3. LOCATOR WIRE IS NOT SHOWN.

ROADWAY CROSS SECTION

TYPICAL BORING UNDER STATE HIGHWAY

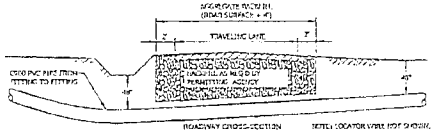

TYPICAL OPEN CUT ROAD CROSSING

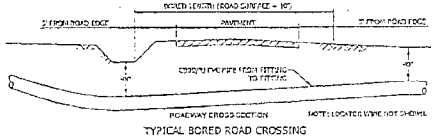

TYPICAL BORED ROAD CROSSING

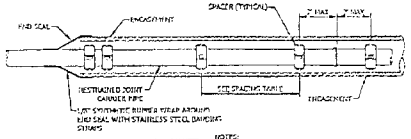

SPACING TABLE		
Carrier Pipe Diameter (in)	Pipe Spacing Maximum (ft)	Spacer Width (inch)
4	4	8
6	4	8
8	4	8
10	4	8
12	4	8
14"	4	8

NOTES:
1. SPACER O.D. SHALL BE AT LEAST 1/2" LARGER THAN PIPE BELL O.D.
2. CLEARANCE BETWEEN SPACER O.D. AND ENCASEMENT PIPE I.D. SHALL BE AT LEAST 1-1/2".
3. A MINIMUM OF 3 SPACERS PER INDIVIDUAL PIPE REGARDLESS OF PIPE LENGTH.
4. USE DOUBLE SPACERS AT END & ONE EACH SIDE OF A JOINT CASING.
5. END SEALS TO BE SYNTHETIC RUBBER BOOT WITH STAINLESS STEEL ADJUSTING BINDING STRAPS.
6. LOCATOR WIRE NOT SHOWN.

ENCASEMENT PIPE SPACER DETAIL

NOTES:
1. VALVE, VALVE BOXES AND SERVICE WATER PIPE TO BE PLUMB AND CHECKED BY A LEVEL.
2. APPROVED FIRE HYDRANTS AND AMERICAN DATUM, DRESSER, CLOW MEDALLION, AND SUPERIOR CHATTANOOGA 250.
3. FOR SPECIAL HYDRANT SETTING SHALL USE FITTING, VALVE, ANCHOR COUPLING AND HYDRANT SHOE IN LIEU OF 6" MJ VALVE ON DRAWING.
4. 4" POST HYDRANT SETTING SHALL USE FITTING, GATE VALVE, ANCHOR COUPLING IN PLACE OF 6" SHOWN ON DRAWING.

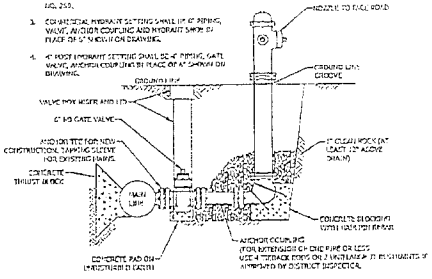

FIRE HYDRANT DETAIL

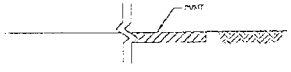

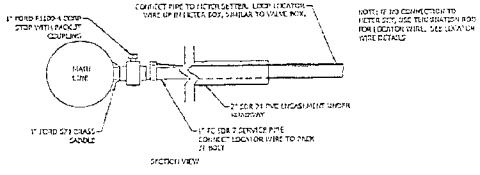

1" SERVICE LINE ROADWAY CROSSING

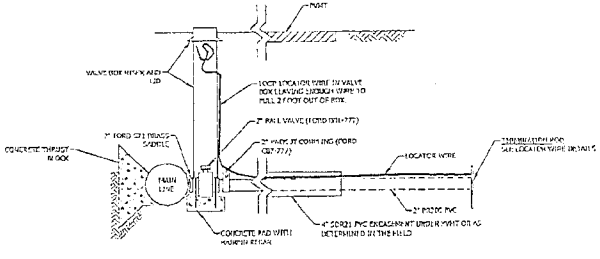

2" SERVICE LINE ROADWAY CROSSING DETAIL

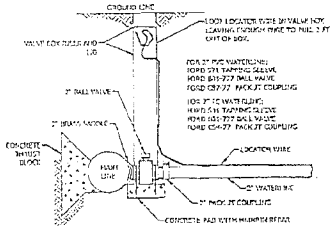

2" CONNECTION TO MAIN

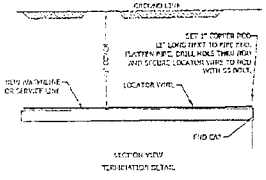

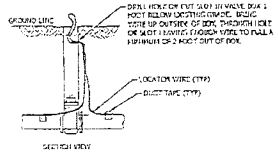

LOCATOR WIRE NOTES:

1. LOCATOR WIRE TO BE #6-10 SOLID BLUE TRACER WIRE AS MANUFACTURED BY KRISTEC WIRE COMPANY.
2. DUCT TAPE LOCATOR WIRE TO TOP OF PIPE ON EACH SIDE OF BELL AND ONE AT THE MIDDLE OF THE PIPE.
3. AT ALL ENDS OF WATER LINES, THE LOCATOR WIRE SHALL BE EXTENDED 2' ABOVE THE TOP OF THE GROUND AND BE ACCESSIBLE. THERE SHALL BE NO MORE THAN ONE SINGLE RETURN ACCESS POINTS AT VALVES.
4. TWO SETS OF LOCATOR WIRE SHALL BE INSTALLED ON PIPE AT ALL CROSSES UNDER HIGHWAYS AND CREEKS, OR AT ADDITIONAL LOCATIONS AS SHOWN ON THE PLANS.
5. DO NOT WRAP WIRE AROUND BOLTS, NUTS, ETC.
6. SPLICE LOCATOR WIRE USING SPLICE KIT IN BOX. DUCT TAPE LOCATOR WIRE TO PIPE OR LACE THROUGH THE SPLICE.
7. WHERE CALLED FOR ON THE PLANS FOR A SPLICE BOX, THE SPLICE BOX SHALL BE IDENTICAL TO A VALVE BOX WITH LID AND LID WITH THE INSTALLATION OF THE WIRE IDENTICAL TO THAT FOR A VALVE BOX.
8. LOCATOR WIRE INSTALLATION CONTINUITY SHALL BE WARRANTED UNDER THE SAME 1 YEAR FOR AND SCHEDULE AS THE WARRANTY.

LOCATOR WIRE DETAILS

STANDARD CONSTRUCTION DETAILS

BARTLETT & WEBB

CONSOLIDATED WATER — Bonne Esprit, Missouri

JUNE 2015

SHEET 2

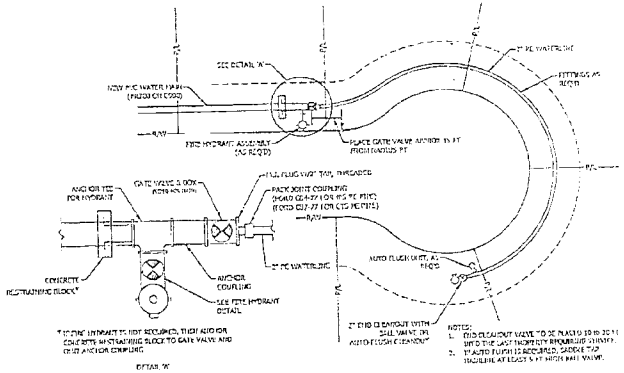

TYPICAL INSTALLATION AT CUL-DE-SAC

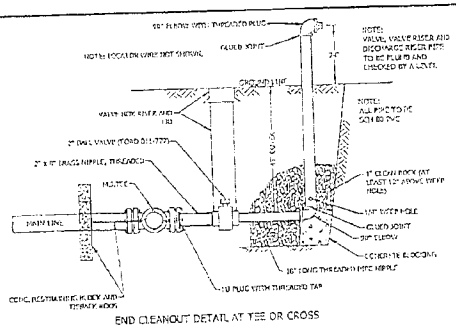

END CLEANOUT DETAIL AT TEE OR CROSS

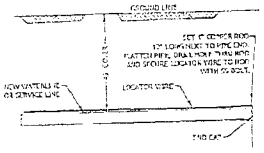

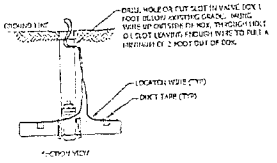

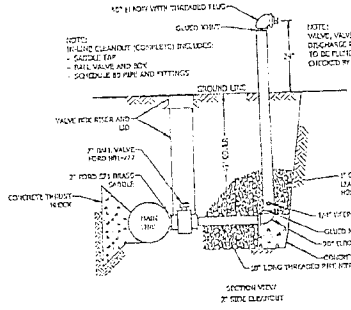

LOCATOR WIRE NOTES:

1. LOCATOR WIRE TO BE FCI #5 SOLID BLUE TRACER WIRE AS MANUFACTURED BY KRISTIE CO. WIRE COMPANY.
2. DUCT TAPE LOCATOR WIRE TO TOP OF PIPE ON EACH SIDE OF BELL AND ONE IN THE MIDDLE OF THE PIPE.
3. AT ALL ENDS OF WATER LINES, THE LOCATOR WIRE SHALL BE EXTENDED 2' ABOVE THE TOP OF THE GROUND AND BE ACCESSIBLE. THERE SHALL BE NO MORE THAN ONE SPLICE BETWEEN ACCESS POINTS AT VALVES.
4. TWO SETS OF LOCATOR WIRE SHALL BE INSTALLED WITH PIPE AT ALL CROSSINGS UNDER HIGHWAYS AND CREEKS, OR AT ADDITIONAL LOCATIONS AS SHOWN ON THE PLANS.
5. DO NOT WRAP WIRE AROUND BOLTS, NUTS, ETC.
6. SPLICE LOCATOR WIRE USING ON-LINE KITSAN DBL. DUCT TAPE LOCATOR WIRE TO PIPE ON EACH END OF THE SPLICE.
7. WHERE CALLED FOR ON THE PLANS FOR A SPLICE BOX, THE SPLICE BOX SHALL BE IDENTICAL TO A VALVE BOX RISER AND LID WITH THE EXCEPTION OF THE SAME IDENTICAL TO TEST IN A VALVE BOX.
8. LOCATOR WIRE INSTALLATION CONTINUITY SHALL BE WARRANTED UNDER THE SAME 1 YEAR PIPE AND VENDER LIMITED WARRANTY.

LOCATOR WIRE DETAILS

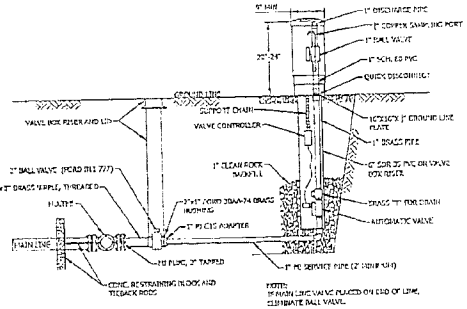

REQUIREMENTS

1. AUTOMATIC FLUSHING DEVICE SHALL HAVE A 1" BRASS FIP INLET, LEADING VERTICALLY INTO A STAINLESS STEEL SOLENOID VALVE. AUTOMATIC SOLENOID VALVE SHALL HAVE NO SELF-CLEANING STRAINER SCREEN, AND HAVE A 200 PSI RATING. SOLENOID SHALL HAVE NO LOOSE PARTS WHEN REMOVED FROM VALVE.
2. SOLENOID VALVE SHALL HAVE AN O-RING CONNECTOR LOCATED UNDER THE VALVE.
3. EACH UNIT SHALL BE FURNISHED WITH A STAND ALONE WATER CONTROLLER. WATER CONTROLLER WILL NOT REQUIRE A SECOND HAND HELD DEVICE FOR PROGRAMMING, WITH A MINIMUM OF 3 FLUSHING CYCLES PER DAY.
4. VALVE CONTROLLER SHALL BE SUBMERSIBLE TO 120, OPERATE WITH A 9 VOLT BATTERY AND HAVE RESIN-SEALED ELECTRICAL COMPONENTS.
5. ALL ABOVE GROUND COMPONENTS SHALL BE CONTAINED WITHIN A UV-RESISTANT LOCKING DOMED COVER.
6. UNIT SHALL BE AS MANUFACTURED BY KRISTIE TOUGHBOY COMPANY MODEL 9400-A-ST, FCI #35, 193, OR APPROVED EQUAL.
7. VALVE, VALVE RISER TO BE FLUSH AND CHECKED WITH A LEVEL.

AUTO FLUSH UNIT DETAIL

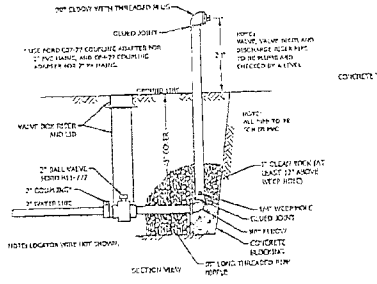

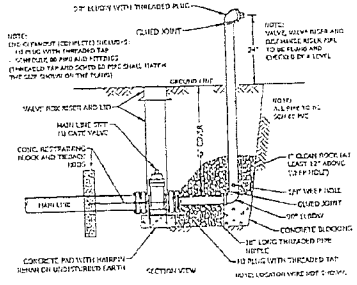

END CLEANOUT DETAILS

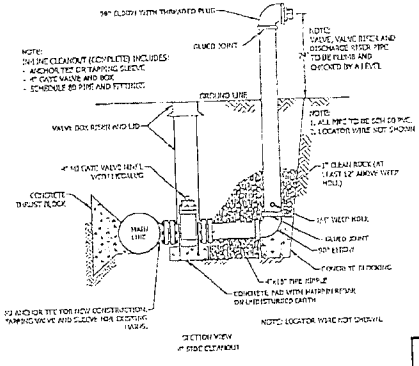

IN-LINE CLEANOUT DETAILS

STANDARD CONSTRUCTION DETAILS		
BARTLETT & WEST	CONSOLIDATED WATER Boone County, Missouri	DATE: JUNE 2015 SHEET NO. 3

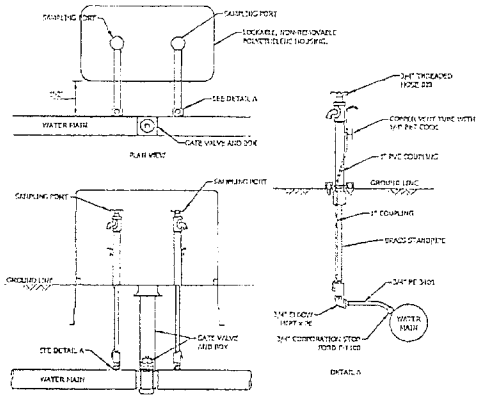

NOTE:

SAMPLING STATION SHALL BE DUAL STANDPIPE DESIGN, FROM BOTH TWO INDEPENDENT ALL BRASS WATER STREAMS FOR UPSTREAM AND DOWNSTREAM SAMPLING.

EACH SAMPLING STATION SHALL BE PROVIDED WITH TWO SHEETS, 30" IN SIZE, AND TWO 3/4" THREADED BRASS SAMPLING BIBS LOCATED ABOVE GROUND NEAR TOP OF EACH STANDPIPE. A COPPER MINT TUBE ON EACH 3/4" BURY STANDPIPE WILL ENABLE THE WATERWAYS TO BE PURGED FREE OF STANDING WATER TO PREVENT FREEZING AND TERRITIVE BACTERIA GROWTH.

EACH STANDPIPE SHALL OPERATE INDEPENDENTLY USING A ROTATING HANDLE AND BE ENCLOSED IN ONE UV-RATED LOCKABLE PLASTIC DIN OUTLET.

ALL WORKING PARTS SHALL BE BRASS AND REMOVABLE FROM ABOVE GROUND WITH NO DIGGING, AS MANUFACTURED BY KURT SALE HARDWARE COMPANY, ST. LOUIS, MO, MODEL #DL100, OR APPROVED EQUAL.

WATER SAMPLING STATION

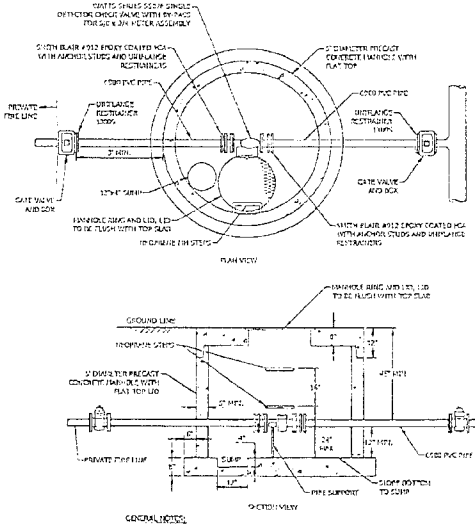

GENERAL NOTES:

1. PRECAST STRUCTURE TO MEET ASTM C478 USING 4000 PSI CONCRETE.
2. JOINTS TO BE A 3/4"x1" MASTIC ROPE.
3. ALL BASES & BOTTOM PIPES TO BE POURED MONOLITHIC.
4. FRAME & COVER TO BE DEETON #100 OR NEENAH R-1560-A.
5. STEP TO BE AMERICAN STEP HS-13 OR EQUAL.
6. ALL PIPE PENETRATIONS TO BE 2-LOCK SEALED.
7. MANHOLE TO BE ORDERED CUSTOM BUILT TO MEET AND EXACT PIPE DEPTH. FOR CORRECT PLACEMENT OF THE PIPE 2 LOCK SEALS, MAY REQUIRE EXPOSING EXISTING MAIN TO DETERMINE CORRECT PIPE CENTERLINE DEPTH PRIOR TO ORDERING MANHOLE. PROVIDE PRECASTER SIZE OF PIPE, DISTANCE FROM CENTERLINE OF PIPE TO GROUND LINE. THE MANHOLE HEIGHT AND DISTANCE BETWEEN THE CENTERLINE OF PIPE AND TOP OF FLOOR WILL NEED TO BE DETERMINED WITH PRE-CAST MFR.

DETECTOR CHECK VALVE MANHOLE

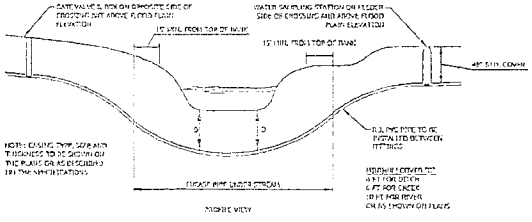

TYPICAL STREAM CROSSING

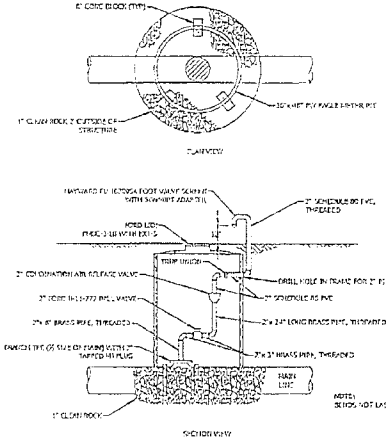

AIR RELEASE PIT DETAIL

STANDARD CONSTRUCTION DETAILS		
DARLEY LOWCAT	CONSOLIDATED WATER Dallas County, Missouri	DATE JUNE 2015
		PAGE 4

CONSOLIDATED
WATER
Boone County, Missouri

WATER DISTRIBUTION SPECIFICATIONS
2013

CONSOLIDATED
PUBLIC WATER SUPPLY DISTRICT NO. 1
BOONE COUNTY, MISSOURI

STATE OF MISSOURI
KENNETH A. STUMPF
ENGINEER
NO. E-19168
REGISTERED PROFESSIONAL ENGINEER

3-26-13

KENNETH A. STUMPF
PE LICENSE NO. E-19168

BARTLETT & WEST, INC.
MISSOURI CERTIFICATE OF AUTHORITY NO. 000167
1719 SOUTHRIDGE DRIVE, SUITE 100
JEFFERSON CITY, MO 65109

EXHIBIT "B"

EASEMENT FOR UTILITY PURPOSES

KNOW ALL PERSONS BY THESE PRESENTS:

THAT THE UNDERSIGNED, **The City of Columbia**, a Municipal Corporation of the State of Missouri, , hereinafter referred to as **Grantor(s)**, on this _____ day of _____, 2015 in consideration of the sum of Ten Dollars ($10.00) and other valuable consideration, the receipt and sufficiency of which are hereby acknowledged, does or do hereby Grant, Bargain, and Sell to **The County of Boone**, a political subdivision of the State of Missouri, herein County or **Grantee** (Grantee's mailing address is: One Government Center, 801 E. Walnut, Street, Columbia, MO), its successors and assigns, both individually and as Trustee for the use and benefit of the "Benefited Parties" described below herein, hereinafter called Grantees, a utility easement with the right, privilege and authority to erect, construct, install, lay, operate, survey, inspect, maintain, repair, rebuild, replace and remove utility lines and utility facilities, including but not limited to water mains, power transmission lines, sanitary sewer lines and all other public utilities, and all necessary appurtenances to make said utilities complete and usable, over, under, across, and upon the following described real estate situated in Boone County, Missouri, to-wit:

Resolution #
LEGAL DESCRIPTION: Two parcels of land over tracts of land described in warranty deeds in Book 363 at Page 154, Book 606 at Page 3 and Book 514 at Page 491, said tracts also being described in surveys in Book 601 at Page 308 and Book 368 at Page 20, all of the Boone County Records; situate in the southwest quarter (1/4) of Section 30, Township 47 North, Range 11 West and the northwest quarter (1/4) of Section 31, Township 47 North, Range 11 West, Boone County, Missouri; said parcels being described as follows:

Starting, for the first parcel, at the northeast corner of the northwest quarter (1/4) of said Section 31; thence along the section line S.89°46'40"W., 904.06 feet to the POINT OF BEGINNNING on the easterly line of Tract 3 of the survey as recorded in Book 4492 at Page 46 of said Boone County Records; thence along the lines of said Tract 3 S.33°39'40"E., 394.59 feet; S.28°09'30"E., 182.16 feet; S.18°11'50"E., 241.86; S.29°20'00"W., 295.75 feet; S.37°51'40"W., 153.19 feet; S.45°11'10"W., 343.45 feet; along a curve to the right having a radius of 610.00 feet a distance of 477.12 feet (the chord of said curve having bearing and distance of S.67°35'30"W., 465.05 feet); S.90°00'00"W., 908.90 feet; along a curve to the left having a radius of 490.00 feet a distance of 756.99 feet (said curve having bearing and distance of S.45°44'30"W., 683.93 feet; S.1°29'00"W., 131.82 feet; S.20°34'30"W., 52.20 feet; N.80°55'30"W., 20.41 feet to a westerly line of said Tract 1 on the west line of said Section 31; thence along the lines of said Tract 1 N.20°34'30"E., 52.91 feet; N.1°29'00"E., 128.45 feet; along a curve to the right having a radius of 510.00 feet a distance of 787.89 feet (the chord of said curve having bearing and distance of N.45°44'30"E., 711.84 feet); N.90°00'00"E., 908.90 feet; along a curve to the left having a radius of 590.00 feet a distance of 461.48 feet (the chord of said curve having bearing and distance of N.67°35'30"E., 449.80 feet); N.45°11'10"E., 342.17 feet; N.37°51'40"E., 150.42 feet; N.29°20'00"E., 285.45 feet; N.18°11'50"W., 231.31 feet; N.28°09'30"W., 179.45 feet; N.33°39'40"W., 406.67 feet to the south line of said Section 30; thence continuing along the lines of said Tract 1; N.33°39'40"W., 806.99 feet; along a curve to the right having a radius of 960.00 feet a distance of 580.26 feet (the chord of said curve having bearing and distance of N.16°20'40"W., 571.47 feet); N.0°58'20"E., 70.70 feet to the northwest line of a tract of land as shown in the survey as recorded in Book 601 at Page 308 of said Boone County Records; thence along said line S.44°45'30"E., 27.93 feet;

thence leaving said line S.0°58'20"W., 51.21 feet; along a curve to the left having a radius of 940.00 feet a distance of 568.17 feet (the chord of said curve having bearing and distance of S.16°20'40"E., 559.56 feet); S.33°39'40"E., 820.20 feet to the POINT OF BEGINNING.

AND

Starting, for the second parcel, at the northeast corner of the northwest quarter (1/4) of Section 31, Township 47 North, Range 11 West; thence along the section line S.89°46'40"W., 1,023.90 feet to the POINT OF BEGINNNING on the westerly line of Tract 1 of the survey as recorded in Book 4492 at Page 46 of said Boone County Records, also being the westerly line of the permanent street easement granted this date; thence along the lines of said Tract 1 S.33°39'40"E., 459.67 feet; S.30°22'00"E., 61.40 feet; S.11°07'50"E., 274.75 feet; along a non-tangent curve to the right having a radius of 510.00 feet a distance of 362.20 feet (the chord of said curve having bearing and distance of S.24°50'20"W., 354.63 feet); S.45°11'10"W., 342.17 feet; along a curve to the right having a radius of 510.00 feet a distance of 398.90 feet (the chord of said curve having bearing and distance of S.67°35'30"W., 388.81 feet); S.90°00'00"W., 737.04 feet; S.86°40'10"W., 172.15 feet; along a non-tangent curve to the left having a radius of 580.00 feet a distance of 714.74 feet (said curve having bearing and distance of S.54°41'50"W., 670.37 feet) to the westerly line of said Tract 1 on the west line of said Section 31; thence along said Section line; N.1°24'50"E., 56.87 feet; thence along the lines of Tract 2 of said Survey along a curve to the right having a radius of 600.00 feet a distance of 684.63 feet (the chord of said curve having bearing and distance of N.57°15'20"E., 648.09 feet); N.86°40'10"E., 172.15 feet; N.90°00'00"E., 737.62 feet; along a curve to the left having a radius of 490.00 feet a distance of 383.26 feet (the chord of said curve having bearing and distance of N.67°35'30"E., 373.56 feet); N.45°11'10"E., 342.17 feet; along a curve to the left having a radius of 490.00 feet a distance of 345.28 feet (the chord of said curve having bearing and distance of N.25°00'00"E., 338.18 feet); N.11°07'50"W., 269.20 feet; N.30°22'00"W., 56.28 feet; N.33°39'40"W., 472.88 feet to the south line of said Section 30; thence continuing along the lines of said Tract 2; N.33°39'40"W., 740.95 feet; along a curve to the right having a radius of 1,060.00 feet a distance of 640.70 feet (the chord of said curve having bearing and distance of N.16°20'40"W., 631.00 feet); N.0°58'20"E., 897.00 feet to the south Right-of-Way line of Missouri State Route H: thence along said line S.88°58'30"E., 20.00 feet to the northwest corner of said Tract 1; thence along the lines of said easement S.0°58'20"W., 896.98 feet; along a curve to the left having a radius of 1,040.00 feet a distance of 628.62 feet (the chord of said curve having bearing and distance of S.16°20'40"E., 619.09 feet); S.33°39'40"E., 754.16 feet to the POINT OF BEGINNING.

The "Benefited Parties" referred to above herein shall be deemed to mean any public corporation, any public entity, any public water supply district, any utility cooperative, and any utility company regulated by the Missouri Public Service Commission, and said Benefited Parties shall have the right to use the easement area for the aforesaid purposes.

The parties agree that in the event the County or a Benefited Party installs utility lines or utility facilities in the above described easement area, such installation shall not materially interfere with any preexisting utility lines or utility facilities installed in the easement area by the County or a Benefited Party and that the provisions of this paragraph may be enforced by proceedings in law or in equity, or both, and in any said legal proceedings the prevailing party shall have the right to recover from the other party or parties all reasonable litigation expenses, including a reasonable attorney fee.

The parties agree that this easement may not be terminated or amended without the prior written consent of The County of Boone and each Benefited Party which has any utility lines or utility facilities located in the easement area at the time of the proposed termination or amendment.

Grantor agrees that it will not erect any building or structure on the easement area or permit the installation of any obstruction on the easement area which will interfere with the construction, placement, operation and maintenance of utility lines and facilities in the easement area.

The County of Boone and/or any Benefited Party shall have the right to trim, clear, cut and remove from the easement area any tree, brush, shrub, plant or other object of any kind which in the reasonable judgment of said party may interfere with the installation and/or maintenance of utility lines and utility facilities in the easement area.

IN WITNESS WHEREOF, the said City of Columbia, has caused these presents to be signed by its City, Manager Mike Matthes, the day and year first written above.

City of Columbia, a Municipal Corporation of the State of Missouri

_____
Mike Matthes, City Manager

Attest: _____
Sheela Amin,
City Clerk

STATE OF MISSOURI)
) SS.
COUNTY OF BOONE)

On this _____ day of _____, 2015 before me, a Notary Public in and for said state, personally appeared Mike Matthes, who being by me duly sworn, acknowledged that he is the City Manager of the City of Columbia, Missouri and the person described in and who executed the foregoing instrument, and acknowledged to me that he executed the same for the purposes therein stated on behalf of the City.

IN TESTIMONY WHEREOF, I have hereunto set my hand and affixed my official seal, at my office in the County aforesaid, the day and year first above written.

_____
Notary Public