CITY OF COLUMBIA CONTRACT #157/2016
FOR THE INSTALLATION OF PARKING GATE ARMS AND RELATED EQUIPMENT

THIS CONTRACT (hereinafter "Contract") by and between the City of Columbia, Missouri, a municipal corporation (hereinafter called "City" or "Customer"), and **HUB Parking Technology USA Inc.**, a **corporation** organized in the State of **Delaware** and with authority to transact business within the State of Missouri (hereinafter called "Contractor" or "HUB"), is made and entered into on the date of the last signatory noted below (hereinafter "Effective Date"). City and Contractor are each individually referred to herein as a "Party" and collectively as the "Parties".

WHEREAS, City has a need for construction of the Project as defined herein and further described in the Bid Documents, Scope of Work, Plans/Shop Drawings and Project Specifications set forth herein and other Contract Documents; and

WHEREAS, in response to City's competitive solicitation, Contractor has submitted a proposal dated **October 21, 2016, with revised pricing dated May 12, 2017** for the Project, which is attached as Exhibit L; and

WHEREAS, City has selected Contractor based upon Contractor's representations that Contractor is qualified to complete the Project in accordance with the terms of this Contract.

NOW, THEREFORE, in consideration of the mutual covenants herein set forth, the Parties agree as follows:

1. **DEFINITIONS:**

   a. "As directed", "as required", "as permitted", "acceptable to" and words of like import shall mean that the direction, requirement, or permission of the Engineer is intended.

   b. "City" shall mean the City of Columbia, Missouri, a municipal corporation acting through its authorized City officials, or appointed representatives.

   c. "Contract" or "Contract Documents" shall mean this document and all exhibits and attachments.

   d. "Contract Amount" or "Contract Price" shall mean the amount set forth in Section 3 of this Contract. The Contract Amount shall include all costs, permit fees, profit, overhead, expenses, taxes and compensation of every kind related to the Work.

e. "Contractor" shall mean the Party having entered into the Contract to perform the work herein specified. Contractor is the Party identified as Contractor in the first paragraph of the Contract.

f. "Effective Date" shall be the date of the last signatory to this Contract.

g. "Engineer" shall mean the Director or the authorized representative or designated project manager of the City's Department for whom the work is to be performed. If applicable, the project manager for this Project shall be identified in subparagraph k of this Section.

h. "Final Acceptance" shall mean a written notice from the Engineer notifying Contractor that construction has been satisfactorily completed and accepted. The written notice will follow the pre-final and final inspection reports and submission of all affidavits and paperwork required herein.

i. "Or Equal" is not intended to impose limitations preventing the free exercise of the Contractor's skill or to exclude products, which are satisfactory. Materials and workmanship shall be of the best of their respective kinds. Trade or manufacturer's names where used in these specifications are intended to establish standards of workmanship and materials. Any article or material equaling the standard may be used in place of that mentioned by the specifications, provided that the material or article proposed is submitted to and approved, in writing, by the Engineer. No substitution shall be made unless this definite approval has been obtained from the City.

j. "Project" shall mean the building, facility, and/or other improvements for which Contractor is to provide Work under this Contract. It may also include construction by City or others. The Project for this Contract is described as **the installation of parking gate arms and related equipment in the City's parking garages**.

k. "Project Manager" shall be the following project manager designated by the City of Columbia to manage the Project on behalf of City (none if left blank): **Drew Brooks**.

l. "RFP" shall mean the Request for Proposals issued by the City of Columbia in connection with the Work for the Project. The term RFP shall include and mean RFQ and Request for Quotes or Quotations when the bid documents utilize the term RFQ as opposed to RFP.

m. "Work" of Contractor or subcontractor includes all items, including but not limited to, transportation of materials and supplies to or from the location of the Project, supervision, management, labor, services, materials, tools, equipment, and supplies whatsoever required to complete the Scope of Work, Plans and Project Specifications as set forth in the Contract

Documents, subject to additions, deletions and other changes as provided for in the Contract.

2. **SCOPE OF WORK, PLANS AND PROJECT SPECIFICATIONS:** Contractor agrees to perform the Work in a good and workmanlike manner according to the specifications and plans set forth herein and in accordance with Contractor's proposal and revised pricing which is attached as Exhibit L.

Contractor shall be responsible and agrees to perform all work according to the specifications, plans, material standards, mobilization, setup and construction standards, procedures and quality standards set forth in the Contract Documents.

If the Project involves the installation or provision of equipment or goods with manufacturer's warranties, Contractor shall transfer the manufacturer's warranty to the City. Contractor further warrants and certifies that any manufacturer's warranty may be transferred to the City. If the Project involves installation of manufactured goods or equipment with manufacturer's warranties, Contractor shall not install the equipment or goods in a manner that voids or limits the original manufacturer's warranty. Unless otherwise directed in writing by City or specifically stated in the Project Specifications, Plans and Scope of Work, Contractor shall install the equipment or goods in the manner set forth by the manufacturer.

3. **CONTRACT AMOUNT:** City shall pay Contractor **nine hundred seventeen thousand, five hundred and forty-four dollars and thirty-three cents ($917,544.33)** for Contractor's completion of the Project in accordance with the requirements and terms and conditions set forth in this Contract.

Payment of the Contract Amount shall be full compensation for all labor, services, materials, supplies, tools, equipment, supervision, management, and anything else necessary to complete the respective items in place, in full compliance with all requirements set forth in the Contract Documents. All costs, permit fees, profit, overhead, expenses, taxes, and compensation of every kind related to the Work are included in the Contract Amount. No labor, services, materials, supplies, tools, equipment, supervision, management, or anything else required by the Contract Documents for the proper and successful completion of the Work shall be paid for outside of or in addition to the Contract Amount. The Work set forth in the Contract Amount shall be itemized in Contractor's Proposal and Pricing. All Work not specifically set forth in Contractor's Proposal and Pricing as a separate pay item is a subsidiary obligation of Contractor, and all costs, permit fees, profit, overhead, expenses, taxes and compensation of every kind in connection therewith are included in the Contract Amount set forth in Contractor's Proposal and Pricing.

4. **COMPLETION TIME:** Contractor will start work promptly, after receipt of a Notice to Proceed and complete the Work **three hundred sixty-five (365)** calendar days from the date of the Notice to Proceed. It is expressly understood and agreed, by and between Contractor and City, that the contract time to complete the Work described herein is a reasonable time, taking into consideration the average climatic and economic conditions and other factors prevailing in the locality of the Work. No extensions will be granted except in case of additional work requested by City under Change Order.

5. **Reserved.**

6. **BONDING:** When Contractor delivers this Contract, executed, to the City, each bound Contract shall be accompanied by an original executed Performance Bond and Labor and Material Payment Bond, on forms provided by City. Bonds shall be written by a company approved by City, each in an amount of one hundred percent (100%) of the Contract Price, guaranteeing complete and faithful performance of the Contract and payment of all bills of whatever nature which could become a lien against property and guaranteeing replacement of defective materials and workmanship for a period of one (1) year after completion of the Work and Final Acceptance. Contractor's Performance Bond is attached as Exhibit D. Contractor's Labor and Material Payment Bond is attached as Exhibit E.

7. **CONTRACTOR'S INSURANCE:** Contractor shall maintain, on a primary basis and at its sole expense, at all times during the life of this Contract the following insurance coverages, limits, including endorsements described herein. The requirements contained herein, as well as City's review or acceptance of insurance maintained by Contractor is not intended to, and shall not in any manner limit or qualify the liabilities or obligations assumed by Contractor under this Contract. Coverage to be provided as follows by a carrier with A.M. Best minimum rating of A- VIII.

   a. Workers' Compensation & Employers Liability. Contractor shall maintain Workers' Compensation insurance coverage in accordance with Missouri Revised Statutes or provide evidence of monopolistic state coverage with the following limits: $500,000 policy limit for each accident, $500,000 policy limit for each disease claim, and $500,000 for each employee with a disease claim.

   b. Commercial General Liability. Contractor shall maintain Commercial General Liability at a limit of not less than $2,000,000 Each Occurrence, $3,000,000 Annual Aggregate.

   c. Coverage shall not contain any endorsement(s) excluding nor limiting Product/Completed Operations, Contractual Liability or Cross Liability.

d. Business Auto Liability. Contractor shall maintain Business Automobile Liability at a limit not less than $2,000,000 Each Occurrence. Coverage shall include liability for Owned, Non-Owned & Hired automobiles. In the event Contractor does not own automobiles, Contractor agrees to maintain coverage for Hired & Non-Owned Auto Liability, which may be satisfied by way of endorsement to the Commercial General Liability policy or separate Business Auto Liability policy.

e. Contractor may satisfy the minimum liability limits required for Commercial General Liability or Business Auto Liability under an Umbrella or Excess Liability policy. There is no minimum per occurrence limit of liability under the Umbrella or Excess Liability; however, the Annual Aggregate limit shall not be less than the highest "Each Occurrence" limit for either Commercial General Liability or Business Auto Liability. Contractor agrees to endorse City as an Additional Insured on the Umbrella or Excess Liability, unless the Certificate of Insurance state the Umbrella or Excess Liability provides coverage on a "Follow-Form" basis.

f. The City of Columbia, its elected officials and employees are to be Additional Insureds with respect to the Project to which these insurance requirements pertain. A certificate of insurance evidencing all coverage required is to be provided at least ten (10) days prior to the Effective Date of this Contract between Contractor and City. Contractor is required to maintain coverages as stated and required to notify City of a Carrier change or cancellation within two (2) business days. City reserves the right to request a copy of the policy. Contractor's insurance certificate shall be attached as Exhibit F.

g. The Parties hereto understand and agree that City is relying on, and does not waive or intend to waive by any provision of this Contract, any monetary limitations or any other rights, immunities, and protections provided by the State of Missouri, as from time to time amended, or otherwise available to City, or its elected officials or employees.

h. Failure to maintain the required insurance in force may be cause for termination of this Contract. In the event Contractor fails to maintain and keep in force the required insurance or to obtain coverage from its subcontractors, City shall have the right to cancel and terminate this Contract without notice.

i. The insurance required by the provisions of this article is required in the public interest and City does not assume any liability for acts of Contractor and/or their employees and/or their subcontractors in the performance of this Contract.

8. **HOLD HARMLESS AGREEMENT:** To the fullest extent not prohibited by law, Contractor shall indemnify and hold harmless the City of Columbia, its directors,

officers, agents, and employees from and against all claims, damages, losses, and expenses (including but not limited to attorney's fees) arising by reason of any act or failure to act, negligent or otherwise, of Contractor, of any subcontractor (meaning anyone, including but not limited to consultants having a contract with Contractor or a subcontractor for part of the services), of anyone directly or indirectly employed by Contractor or by any subcontractor, or of anyone for whose acts Contractor or its subcontractor may be liable, in connection with providing these services. This provision does not, however, require Contractor to indemnify, hold harmless, or defend the City of Columbia from its own negligence.

9. **PERMITS:** Contractor shall secure all necessary licenses and permits before beginning work, keep necessary records as required, and do all work in such manner as to comply with all ordinances and laws of the City, County, State, and Nation as apply to the work herein outlined.

10. **PAYMENTS:** Contractor will be allowed payment in accordance with the following schedule, less any offsets or deductions authorized in this Contract or otherwise authorized by law. This section describes the method of payment only and does not alter the Contract Amount established in Section 3, above.

    a. First payment of forty percent (40%) of the Contract Amount shall be paid by the City to the Contractor with the City's written Notice to Proceed.

    b. Second payment of fifty percent (50%) of the Contract Amount shall be paid by the City to Contractor within fifteen (15) days of the City's acceptance of the equipment delivery to the City of Columbia.

    c. Third payment of five percent (5%) of the Contract Amount shall be paid by the City to Contractor within fifteen (15) days of completion of Project installation by Contractor.

    d. Fourth and final payment of the remaining five percent (5%) upon final acceptance of the completed Project by the City.

       Not later than thirty (30) days after final tests and acceptance, City will make final payment of the retained five percent (5%). If, for any reason, City should delay testing and acceptance, then final payment shall be due and payable sixty (60) days after completion of all items of this Contract unless such tests and acceptance is delayed or withheld due to defective equipment or improper operation of the equipment supplied by Contractor.

    e. Contractor shall, by affidavit, certify to the Engineer that all bills and claims properly due and chargeable against the Work have been satisfied and that Contractor has complied with the laws relating to the payment of prevailing wage rates and that Contractor shall release the City of Columbia from all further claims, which certificate must bear the written endorsement of the Surety on the bond. Contractor shall complete and

submit Contractor's Affidavit for Final Payment as set forth in Exhibit G to City along with any and all other completed affidavits and forms set forth in this Contract with Contractor's request for final payment. The acceptance by Contractor of the final payment shall constitute a release and waiver of any and all rights and privileges under the terms of this Contract; further, the acceptance by Contractor of final payment shall relieve City from any and all claims or liabilities on the part of City relating to or connected with this Contract.

f. The cost of all legal publications, engineering costs, and other costs incidental to the proper consummation of this Contract will be paid by Contractor, and the total amount of such costs will be included in the total cost of the Work.

g. Contractor shall pay:

For all transportation and utility service not later than the 20th day of the calendar month following that in which the services are rendered.

For all materials, tools, and other expendable equipment to the extent of ninety-five percent (95%) of the cost thereof, not later than the 20th day of the calendar month following that in which such materials, tools, and equipment are delivered at the site of the Project, and the balance of the cost thereof not later than the 30th day following the completion of that part of the work in or on which such materials, tools, and equipment are incorporated or used.

To each of his subcontractors, not later than the 5th day following each payment to Contractor, the respective amounts allowed Contractor on account of the work performed by his subcontractor, to the extent of each subcontractor's interest therein.

h. City may offset or deduct any amounts Contractor owes to City from the final payment. City may withhold final or any other payment to Contractor on any reasonable basis, including but not limited to the following:

1. Unsatisfactory job progress;

2. Defective Work;

3. Failure to make payments to subcontractors or suppliers;

4. Reasonable evidence that all Work or the Project cannot be completed for the unpaid balance of this Contract Amount;

5. Damage by Contractor or subcontractors or suppliers to property of City or others;

6. Contractor's breach of this Contract; or

7. Contractor's failure to provide requested documentation.

i. Contractor shall, at the request of City, furnish satisfactory evidence that all obligations to subcontractors, laborers, workmen, mechanics, materialmen and furnishers of machinery and parts thereof, equipment, tools and all supplies incurred in the furtherance of the performance of the Work have been paid, discharged or waived. If Contractor does not pay subcontractors or suppliers for labor and/or material properly provided, City may, but shall not be required to, pay subcontractors and suppliers directly. Any payments made to subcontractors and suppliers shall be charged against the Contract Amount. City shall not be liable to Contractor for any such payments made in good faith. This provision shall not confer any right upon any subcontractor or supplier to seek payment directly from City.

11. **EXTRA WORK AND CHANGES**: If any extra work is to be done for which there is no quantity and price included in the Contract, or any change in the plans and specifications is deemed necessary by City, City may issue to Contractor a written change order or contract amendment directing that such extra work be done or that such change be made, and this Contract shall be modified accordingly. Extra work shall be done in accordance with the specifications. Compensation to Contractor will be calculated as an addition to or deduction from the Contract Amount, based upon such written terms as may be established between the Parties either:

a. By an acceptable lump sum proposal of Contractor; or

b. By unit price of the original bid or acceptable unit price for which there is no unit price in the original bid, and a not to exceed amount; or

c. On a cost-plus limited basis not to exceed a specified limit.

Where such prices or sums cannot be agreed upon, the work shall be done upon a force account basis if so ordered by the Engineer.

11.1 **Force Account.** City may require the work to be done by force account, only when expressly directed in writing by the Engineer and in no other instance whatsoever for any determination of contract adjustments for any work performed on the project, whether claimed under the Contract, for breach of the Contract, arising from a claimed representation by which the Contract was induced or any other basis. All extra work done on a force account basis will be paid for in the following manner:

Labor. For all lead workers and laborers, Contractor will receive the rate of wage paid for each hour that said lead workers and laborers are engaged in the force account work.

Contractor will receive the actual costs paid to, or on behalf of, employees for subsistence and travel allowances, health and welfare benefits, pension fund benefits or other benefits, if such amounts are required by the collective bargaining agreement or employment contract applicable to the classes of labor employed on the work.

An amount equal to ten (10) percent (five (5) percent profit and five (5) percent overhead) of the sum of the above items will also be paid Contractor.

Insurance and Taxes. For property damage, liability and worker's compensation insurance premiums, unemployment insurance contributions and social security taxes on the force account work, Contractor will receive the actual cost paid, to which no percentage will be added.

Material. For material accepted by the Engineer and used, Contractor will receive the actual cost of such material delivered on the work, including transportation charges paid (exclusive of equipment rentals as hereinafter set forth), to which cost ten (10) percent (five (5) percent profit and five (5) percent overhead) will be added. For all material used in connection with, but not entering permanently into the work, reasonable depreciation will be allowed.

Equipment. For only that Contractor-owned equipment necessary to accomplish the force account work, including all fuel and lubricants, tires and repairs, Contractor will be allowed an hourly rate equal to the monthly rental rate divided by 176 hours as set out in the Rental Rate Blue Book for Construction Equipment on file in the Office of the Secretary of the Commission at the time the work is begun. The allowed rates will be the rate adjustment factor multiplied by the base hourly rates multiplied by the regional adjustment factor, plus the estimated operating cost per hour. The allowed time will be the actual operating time on the work. For the time required to move the equipment to and from the site of the work and any authorized standby time, the rate will be fifty (50) percent of the hourly rate after the actual operating costs have been deducted. All allowed time shall fall within the authorized working hours for such extra work. No payment will be allowed for time elapsed while equipment is broken down or being replaced. The hourly rental rates will apply only to equipment that is already on the job. If the actual unit of equipment to be used is not listed in the schedule, the rate listed for similar equipment with the approximate same initial cost shall be used. Equipment to be used and all prices shall be agreed upon in writing before such equipment is used. An amount equal to 10 percent (5 percent profit and 5 percent overhead) of the sum of these items will also be paid to Contractor. Whenever it is necessary for Contractor to rent equipment, the rental and transportation costs of the equipment plus five percent for overhead will be paid. In no case shall the rental rates exceed those of established distributors or equipment rental agencies. All prices shall be agreed upon in writing before such equipment is used.

Miscellaneous. No additional allowance will be made for general superintendence, the use of small tools or other costs for which no specific allowance is herein provided. No allowance will be made for any consequential loss of profit or production, actual or anticipated because of any force account. Jobsite and home office overhead expenses shall be considered fully compensated by the payments provided in this section.

Subcontracted Work. For administration and all overhead costs in connection with approved subcontract work, Contractor will receive an amount equal to five percent of the actual cost of the subcontracted work. The Engineer has the authority to require alterations in the equipment and labor force assigned to force account work, to limit authorization of overtime work to that normally used on a project for work of similar nature or to require overtime work when an emergency exists, and to require the cessation of force account work when adverse conditions seriously limit productivity.

Statements. No payment will be made for work performed on a force account basis until Contractor has furnished the Engineer with duplicate itemized statements of the cost of such force account work detailed as follows:

(a) Name, classification, date, daily hours, total hours, rate and extension for each laborer and foreman.

(b) Designation, dates, daily hours, total hours, rental rate and extension for each unit of machinery and equipment.

(c) Quantities of material, prices and extensions.

(d) Transportation of material.

(e) Cost of property damage, liability and worker's compensation insurance premiums, unemployment insurance contributions and social security.

Statements shall be accompanied and supported by receipted invoices for all rental equipment, material used and transportation charges.

If material used on the force account work is not specifically purchased for such work but is taken from the Contractor's stock, then in lieu of the invoices, Contractor shall furnish an affidavit certifying that such material was taken from Contractor's stock, that the quantity claimed was actually used, and that the price and transportation claimed represent the actual cost to Contractor.

Compensation. Each day the Contractor's representative and the Engineer shall compare records of the cost of work done as ordered on a force account basis. Two copies of these records will be made by the Engineer on forms provided by the City, and the copies shall be signed at the end of each day by both the Engineer and Contractor, one copy to be retained by the Engineer, and

one copy to be retained by Contractor. The total payment made, as provided in this section shall constitute full compensation for such work.

12. **PATENTS:** Contractor shall protect City against all suits for patent infringement on materials, equipment, and methods used. If Contractor is required or desires to use any design, device material, or process covered by letter patent or copyright, he shall arrange and provide for such use by suitable agreement with the patentee or owner, and a copy of the agreement may be required by the City. Contractor shall indemnify, defend and save harmless City from any suit, claims, or damages arising from the infringement upon or use of any patented or copyrighted design, device, material, or process.

13. **DISCHARGE OF EMPLOYEES:** Any employee of Contractor who is stationed at the site of the work and should prove to be quarrelsome, dishonest, incompetent or inexperienced, or should not work for the good of the job, shall, upon written notice from the City, be removed by Contractor and replaced by an employee with proper qualifications.

14. **ASSIGNMENT:** No assignment by Contractor of any principal construction contract or any part thereof or of the funds to be received thereunder by Contractor, will be recognized unless such assignment has had the approval of City and the Surety has been given due notice of such assignment in writing. In addition to the usual recitals in assignment contracts, the following language must be set forth:

    "It is agreed that the funds to be paid to the assignee under this assignment are subject to a prior lien for services rendered or materials supplied for the performance of the work called for in said Contract in favor of all persons, firms, or corporations rendering such services or supplying such materials."

15. **SUBCONTRACTING:** No part of the Work covered by this Contract shall be sublet by Contractor without the prior written approval of City. Contractor shall file with the Engineer a complete list of subcontractors together with a list of the kinds of materials used. This list shall be submitted in writing to the Engineer as soon as subcontracts are made and approved by City. Any subcontractor performing work under this Contract at the direction of Contractor shall file a "Final Receipt of Payment and Release" form, a copy of which is attached as Exhibit H. This completed form shall be submitted to City along with Contractor's application for final payment.

16. **ACCIDENT PREVENTION:** Precaution shall be exercised at all times for the protection of persons (including employees) and property.

    a. The safety provisions of applicable laws, and building and construction codes shall be observed. Machinery, equipment, and all hazards shall be guarded or eliminated in accordance with the safety provisions of the "Manual of Accident Prevention in Construction", published by the

Associated General Contractors of America, to the extent that such provisions are not in contravention of applicable laws. Current standards of the Occupational Safety and Health Act shall be applied. Contractor shall not commit or permit a public or private nuisance during this Project.

b. Contractor shall take all necessary steps to protect his own workers, the utility personnel, and the public from unnecessary danger or hazard during the prosecution of the work on this Project. Danger signs, warning signs, flares, lanterns, railings, barriers, sheeting, shoring, etc. shall be erected to prevent accidents from construction, falling objects, rotating machinery, electric lines, and other conditions which might present unusual hazard.

17. **EQUAL OPPORTUNITY:** The City of Columbia is an equal opportunity, affirmative action employer pursuant to federal, state and local law. Contractor shall comply with federal, state and local laws related to Equal Opportunity. Contractor shall not discriminate based on race, color, religion, sex, national origin, ancestry, marital status, disability, sexual orientation or gender identity.

18. **DOMESTIC PURCHASING POLICY:** Contractors are encouraged to select and use materials manufactured, assembled, or produced in the United States in the performance of this Contract whenever the quality and price are comparable with other goods.

19. **AMERICANS WITH DISABILITIES ACT:** Contractor shall comply with all applicable provisions of the Americans with Disabilities Act and the regulations implementing the Act, including those regulations governing employment practices. If this Contract involves Contractor providing services directly to the public, Contractor shall make the services, programs, and activities governed by this Contract accessible to the disabled as required by the Americans with Disabilities Act and its implementing regulations. If this Contract involves construction work, the Project when completed shall comply with the requirements of the Americans with Disabilities Act and the regulations implementing the Act. Payment of funds under this Contract are conditional upon Contractor certifying to City in writing that it and the completed Project complies with the Americans with Disabilities Act and 28 CFR Part 35.

20. **MATERIAL AND WORKMANSHIP:** All materials provided by Contractor shall be new materials of high quality which shall give long life and reliable operation. All equipment shall be modern in design and shall not have been in prior service except as required by factory tests. The workmanship shall be of high quality in every detail.

21. **SPECIFICATIONS AND PLANS/SHOP DRAWINGS:** Contractor shall keep at the job site a copy of the plans/shop drawings and specifications and shall at all times give City and Engineer access thereto. Anything mentioned in the specifications and not shown on the plans/shop drawings, or shown on the plans/shop drawings and not mentioned in the specifications, shall be of like

effect as if shown or mentioned in both. In any case of discrepancy between the plans/shop drawings and the specifications, the matter shall be promptly submitted to Engineer, who shall promptly make a determination in writing. Any adjustment or interpretation by Contractor without this determination shall be at Contractor's own risk or expense. Engineer shall furnish from time to time such detail plans and other information as may be considered necessary, unless otherwise provided.

22. **REPAIRS AND/OR REPLACEMENT OF DEFECTIVE PORTIONS:** Until work is accepted by the Engineer, it shall be in the custody and under the charge and care of Contractor. Contractor shall rebuild, repair, restore, or make good, at his own expense, all damages to any portion of the work before its completion and Final Acceptance, caused by the action of the elements or from any other reason. City shall have the right of full possession and use of any or all completed portions of the work, regardless of the completion time for the Contract, and such possession and/or use shall not release Contractor from the proper and adequate maintenance of any street or alley or property over which this work may go, nor shall such possession and/or use be deemed as Final Acceptance by City.

    Contractor shall be responsible for a period of one (1) year from and after the date of Final Acceptance by City of the Work covered by this Contract, for any repairs or replacements caused by defective materials, workmanship, or equipment which, in the judgment of the Engineer, shall become necessary during such period. Contractor shall undertake with due diligence to make the aforesaid repairs and/or replacements within ten (10) days after receiving written notice that such repairs or replacements are necessary.

    If Contractor should neglect to begin such repairs or replacements within this period, or, in case of emergency, where in the judgment of the Engineer, delay would cause serious loss or damage, the repairs and/or replacements may be made by City and charged to Contractor.

23. **INTERFERENCE:** All work scheduled by Contractor shall be planned with the consent of the Engineer and shall not in any way interfere with any utility, highway, railroad, or private property unless consent is given by authorized representatives of City.

24. **NO THIRD-PARTY BENEFICIARY**: No provision of this Contract is intended to nor shall it in any way inure to the benefit of any third party, so as to constitute any such person a third-party beneficiary under this Contract.

25. **TERMINATION FOR DEFAULT**: In addition to any failure of Contractor to perform any provisions herein, Contractor will be in default for the following: If Contractor fails to begin the work within the time specified, or fails to perform the work with sufficient workmen or materials to ensure its prompt completion or performs the work unsuitably, or neglects or refuses to remove materials or

perform anew such work as shall be rejected as defective and unsuitable, or discontinues the prosecution of the work, or from any other cause whatsoever does not carry on the work in an acceptable manner, or becomes insolvent or is adjudicated a bankrupt, or commits any act of bankruptcy or insolvency, or allows any final judgment to stand against him unsatisfied for a period of ten (10) days, the Engineer may give notice in writing by registered mail to Contractor and the Surety of such delay, neglect, or default. If within ten (10) days after such notice Contractor does not proceed to remedy to the satisfaction the Engineer the fault specified in said notice, or the Surety does not proceed to take over the work for completion under the direction of the Engineer, City shall have full power and authority, without impairing the obligation of Contract or the bond, to take over the completion of the work; to appropriate or use any or all material and equipment on the ground that is suitable and acceptable; to enter into agreements with others; or to use other such methods as in its opinion may be required for the completion of Contract in an acceptable manner. Contractor and Contractor's Surety shall be liable for all costs and expenses incurred by City in completing the work, and also for all liquidated damages in conformity with the terms of the Contract. In case the sum of such liquidated damages and the expense so incurred by City is less than the sum which would have been payable under the Contract if it had been completed by Contractor, Contractor, or Contractor's Surety, shall be entitled to receive the difference; and in case the sum of such expense and such liquidated damages exceeds the sum which would have been payable under the Contract, Contractor and Contractor's Surety shall be liable and shall pay to City the amount of such excess.

City may, by written notice, terminate this Contract in whole or in part for failure of Contractor to perform any of the provisions thereof. In such event, Contractor shall be liable for damages, including the excess cost of procuring similar supplies or services; provided, that if (a) it is determined for any reason that Contractor was not in default or, (b) failure to perform is beyond Contractor's or subcontractor's control, fault or negligence, the termination shall be deemed to be a termination for convenience. In general, termination for default shall be effective ten (10) days from Contractor's receipt of notice. In the event the good or services provided under the Contract are deemed to serve an emergency purpose, and the provision of those goods/services is somehow compromised, City reserves the right to issue an immediate, same day, termination notice and secure the goods/services elsewhere.

26. **TERMINATION FOR CONVENIENCE**: The performance of work under this Contract may be terminated by the City of Columbia in whole or in part, whenever the City, through its Purchasing Agent, determines that such termination is in the best interest of the City of Columbia. Any such termination will be affected by delivery to Contractor of a letter of termination specifying the extent to which performance of work under this Contract is terminated and the date upon which such termination is effective. After receipt of a termination letter, Contractor shall:

a. Stop work on this Contract on the date and to the extent specified in the letter.

b. Place no further orders for materials, services or facilities except as may be necessary to complete any portions of the work under this Contract not terminated.

c. Complete on schedule such part of the work as will not be terminated by termination letter.

27. **PREVAILING WAGES:** Contractor shall comply with all requirements of the prevailing wage law of Missouri Revised Statutes Sections 290.210 to 290.340, including the latest amendments thereto. This Contract shall be based upon payment by Contractor and his subcontractors of wage rates not less than the prevailing hourly wage rate for each craft or classification of workers engaged on the work as determined by the Missouri Division of Labor Standards. The Missouri Division of Labor Standard Annual Wage Order applicable to this Project is attached as Exhibit I.

Contractor and each subcontractor shall keep an accurate record showing the names, occupations, and crafts of all workers employed, together with the number of hours worked by each worker and the actual wages paid to each worker. At all reasonable hours, such records shall be open to inspection by the Missouri Division of Labor Standards and City. The payroll records shall not be destroyed or removed from the State for at least one year after completion of the work.

Pursuant to Section 290.250 RSMo, Contractor shall forfeit as a penalty to City one hundred dollars ($100.00) for each workman employed, for each calendar day, or portion thereof, such workman is paid less than the said stipulated rates for any work done under said contract, by him or by any subcontractor under him. After completion of the work and before final payment can be made under this Contract, Contractor and each subcontractor must file with City an affidavit stating that they have fully complied with the provisions and requirements of the prevailing wage law of Missouri. The form of the Affidavit of Compliance with the Prevailing Wage Law is attached hereto as Exhibit J.

28. **CONSTRUCTION SAFETY PROGRAM REQUIREMENTS:**

a. Contractor shall require all on-site employees to complete the ten-hour safety training program required pursuant to Section 292.675 RSMo, if they have not previously completed the program and have documentation of having done so. All employees working on the project are required to complete the program within sixty (60) days of beginning work on the Project.

b. Any employee found on the worksite subject to this section without

documentation of the successful completion of the course required under subsection (a) shall be afforded twenty (20) days to produce such documentation before being subject to removal from the project.

c. Pursuant to Section 292.675 RSMo., Contractor shall forfeit as a penalty to City two thousand five hundred dollars ($2,500.00) plus one hundred dollars ($100.00) for each employee employed by Contractor or subcontractor, for each calendar day, or portion thereof, such employee is employed without the required training. The penalty shall not begin to accrue until the time periods in subsections (a.) and (b.) have elapsed. City shall withhold and retain from the amount due Contractor under this Contract, all sums and amounts due and owing City as a result of any violation of this section.

29. **EMPLOYMENT OF UNAUTHORIZED ALIENS PROHIBITED:** Contractor shall comply with Missouri Revised Statute Section 285.530 in that Contractor shall not knowingly employ, hire for employment, or continue to employ an unauthorized alien to perform work within the state of Missouri.

Contractor shall, by sworn affidavit and provision of documentation, affirm its enrollment and participation in a federal work authorization program with respect to the employees working in connection with the contracted services. Contractor shall also complete a Work Authorization Affidavit affirming that it does not knowingly employ any person who is an unauthorized alien in connection with the contracted services. The form of the Work Authorization Affidavit is set forth in Exhibit K. Contractor shall require all subcontractors to observe the requirements of this section and shall obtain a Work Authorization Affidavit from each subcontractor performing Work on the Project.

30. **SPECIFICATIONS:** Contractor shall perform all work on this Project in accordance the requirements set forth in the Scope of Work, Plans and Project Specifications which are attached as Exhibit A and in accordance with Street, Storm Drain, and Sanitary Sewer Specifications and Standards (October 2016), which are attached as Exhibit B. In the event of a conflict between these specifications, Contractor shall notify Engineer of the conflict. Unless the Engineer directs otherwise, the Project Specifications in Exhibit A shall control over the general specifications in Exhibit B.

31. **NO WAIVER OF IMMUNITIES:** In no event shall the language of this Contract constitute or be construed as a waiver or limitation for either Party's rights or defenses with regard to each Party's applicable sovereign, governmental, or official immunities and protections as provided by federal and state constitutions or laws.

32. **AMENDMENT:** No amendment, addition to, or modification of any provision hereof shall be binding upon the Parties, and neither Party shall be deemed to have waived any provision or any remedy available to it unless such amendment,

addition, modification or waiver is in writing and signed by a duly authorized officer or representative of the applicable Party or Parties.

33. **GOVERNING LAW AND VENUE:** This Contract shall be governed, interpreted, and enforced in accordance with the laws of the State of Missouri and/or the laws of the United States, as applicable. The venue for all litigation arising out of, or relating to this Contract, shall be in Boone County, Missouri, or the United States Western District of Missouri. The Parties hereto irrevocably agree to submit to the exclusive jurisdiction of such courts in the State of Missouri. The Parties agree to waive any defense of forum non conveniens.

34. **GENERAL LAWS:** Contractor shall comply with all federal, state, and local laws, rules, regulations, and ordinances.

35. **NOTICES:**

a. The following persons are designated by the respective Parties to act on behalf of such Party and to receive all written notices and payment invoices:

IF TO CITY:

City of Columbia
Finance Department
P.O. Box 6015
Columbia, MO 65205-6015
ATTN: City Purchasing Agent

With a Copy to:

Public Works Department
P.O. Box 6015
Columbia, Mo 65205
ATTN: Project Manager
Drew Brooks

IF TO CONTRACTOR:

HUB Parking Technology USA Inc.
761 Commonwealth Drive
Warrendale, PA 15086

b. Any notice required by this Contract to be given in writing or that either City or Contractor wishes to give to the other in writing shall be signed by or on behalf of the Party giving notice. The notice shall be deemed to have been completed when sent by certified or registered mail to the other Party at the address set forth herein, or delivered in person to said Party or their authorized representative.

c. Contractor's designated representative shall be available to meet with City at any time during the performance of the Work and shall have full authority to act on Contractor's behalf on any matter related to this Contract and/or the Work.

36. **SOFTWARE LICENSES AND DATA SECURITY:**

a. DATA SECURITY. Contractor and its software shall comply with the requirements of this subsection. Contractor shall require its subcontractors or third party software providers to at all times comply with the requirements of this subsection.

1. Contractor further covenants that any data entered into the software from City, its employees or customers or derived therefrom (hereinafter "City Data") shall be stored in the United States of America. City Data shall not be transferred, moved, or stored to or at any location outside the United States of America. City Data shall be confidential and proprietary information belonging to either City or its customers or users of the Software. Contractor shall not sell or give away any such City Data.

2. Contractor shall maintain the security of City Data and that of City's customers and any user that is stored in or in any way connected with Software Products and applications. If either Party believes or suspects that security has been breached or City Data compromised whether it be from harmful code or otherwise, the Party shall notify the Other Party of the issue or possible security breach within forty-eight (48) hours.

3. NO HARMFUL CODE: Contractor warrants that the Software Products do not contain Harmful Code. For purposes of this Agreement, "Harmful Code" is any code containing any program, routine, or device which is designed to delete, disable, deactivate, interfere with or otherwise harm any software, program, data, device, system or service, including without limitation, any time bomb, virus, drop dead device, malicious logic, worm, Trojan horse or trap or back door. "Harmful Code" shall also include any code containing any program, routine, or device which is designed to monitor consumers in the privacy of their home or during other private activities without their knowledge, including but not limited to the use programs to monitor the use of audio beacons emitted by television contained in software programs such as Silverpush or other comparable program or the use of video or photographic content without the consumers consent.

b. SOFTWARE LICENSES. This Contract involves the purchase of licenses as indicated in Exhibit L. Exhibit M contains the software license agreement.

37. **SUNSHINE LAW**: City is subject to the Missouri Sunshine Law. The Parties agree that the Agreement shall be interpreted in accordance with the provisions of the Missouri Sunshine Law, as amended. HUB shall maintain the

confidentiality of information and records which are not subject to public disclosure under the Sunshine Law. HUB shall not disclose to any third party or use for any purpose inconsistent with this Agreement any confidential User information it receives in connection with its performance of the services. HUB shall not give any confidential or proprietary information to City to maintain. If it is required under this Agreement or by law that City maintain any confidential or proprietary information or documents about HUB's business, operations, financial condition, technology, systems, no-how, products, services, suppliers, clients, marketing data, plans, and models, and personnel, the documents and information shall be clearly marked as such.

38. **PCI COMPLIANCE:** If any Software module or Software upgrade includes the storage, processing, or use of credit cards and/or debit cards, Contractor shall comply and shall warrant that the Contractor's software and services (including any modifications, customizations or interfaces) comply with the Payment Card Industry (PCI) Data Security Standards and the rules and regulations of payment card industry organizations including Visa, MasterCard, Discover, and any other applicable payment card industry organizations. Contractor shall further warrant that such software and/or modules be in compliance with Good Financial Industry and Accounting Practices; SAS70 auditing standards; NACHA (The Electronic Payments Association) Operating Rules; and the City's Red Flag Policy as applicable. Contractor shall further require that any subcontractor's software, modules, or upgrades be in compliance with this section in its contracts with those subcontractors or third party software providers. Compliance is required to be maintained with all listed applicable regulations, standards, etc. as they are updated and modified over the time period of the agreements. Contractor shall notify City promptly of their failure or subcontractor's failure to maintain such compliance. In addition to Contractor's hold harmless agreement, Contractor shall be required to bear the cost of any fees, penalties, or costs accrued to City because of such failure to maintain such compliance.

39. **ADA COMPLIANCE:** All public facing portions of Contractor's Software Products and applications shall comply with the requirements of the Americans with Disabilities Act and comply with the requirements of any rules or regulations of the federal, state, or local government related thereto.

40. **CONTRACT DOCUMENTS:** The Contract Documents include this Contract and the following attachments or exhibits, which are incorporated herein by reference.

Exhibit	Description
A	RFP containing City's Scope of Work, Plans/Shop Drawings and Project Specifications
B	Street, Storm Drain, and Sanitary Sewer Specifications and Standards (October 2016)
C	None – reserved for future use
D	Contractor's Performance Bond
E	Contractor's Labor & Material Payment Bond
F	Contractor's Insurance Certificate
G	Contractor's Affidavit for Final Payment
H	Final Receipt of Payment and Release
I	Missouri Division of Labor Standards Annual Wage Order Applicable for the Project
J	Affidavit of Compliance with Prevailing Wage Law
K	Work Authorization Affidavit
L	Contractor's Proposal and Pricing
M	Contractor's Hardware Sales Terms with Schedule 1 Equipment and Schedule 2 Prices and Payment Schedule; Software License Terms with Schedule 1 Software and Schedule 2 License Fees; Installation Service Terms with Schedule 2 Project Plan and Schedule 3 Rates Schedule and Fees for Noncovered Work

In the event of a conflict between the terms of any Exhibit or Attachment and the terms of this Contract, the terms of this Contract control. In the event of a conflict between the terms of any Exhibit and any Attachment, the terms of the documents control in the order listed above.

41. **ENTIRE CONTRACT:** This Contract represents the entire and integrated Contract between the Parties relative to the Project herein. All previous or contemporaneous contracts, representations, promises and conditions relating to Contractor's services on this Project described herein are superseded.

[SIGNATURE PAGE FOLLOWS]

IN WITNESS WHEREOF, the PARTIES have hereunto set their hands and seals the day and year written below.

CITY OF COLUMBIA, MISSOURI

By: _____
Lawrence Luck, City Purchasing Agent

Date: _____

APPROVED AS TO FORM:

By: _____
Nancy Thompson, City Counselor

CERTIFICATION: I hereby certify that this Contract is within the purpose of the appropriation to which it is to be charged account 55616488-604990 PK059 that there is an unencumbered balance to the credit of such account sufficient to pay therefore.

By: _____
Michele Nix, Director of Finance

(Seal)

HUB Parking Technology USA Inc.

By: _____

Name: John D. Lovell

Title: Managing Director & CEO

Date: August 31, 2017

ATTEST:

By: _____

Name: Jenna Rodgers.

EXHIBIT A

RFP CONTAINING CITY'S SCOPE OF WORK AND PROJECT SPECIFICATIONS

EXHIBIT A

REQUEST FOR PROPOSAL

157/2016– PARKING GATE ARM

FOR THE

CITY OF COLUMBIA, MISSOURI

FINANCE/PURCHASING DIVISION
CALE TURNER, CPPB
PURCHASING AGENT
701 E. BROADWAY, 5TH FLOOR
COLUMBIA, MO 65201

DAVID A. NICHOLS
DIRECTOR OF PUBLIC WORKS

MICHELE NIX
DIRECTOR OF FINANCE

MELISSA PASLEY
SENIOR PROCUREMENT OFFICER
(573) 817-5005

Request For Proposal No: 157/2016
Closing Date: 5:00 p.m. CST, Friday, October 7, 2016

TABLE OF CONTENTS

INTRODUCTION AND BACKGROUND

GENERAL REQUIREMENTS

SCOPE OF WORK

OFFERORS INSTRUCTIONS

EVALUATION AND AWARD

EXHIBITS

(A) – W-9
(B) – E-VERIFY/WORK AUTHORIZATION AFFIDAVIT
(C) - WAGE ORDER # 23
(D) – BID BOND FORM
(E) – STATEMENT OF BIDDERS QUALIFICATONS

1. INTRODUCTION AND BACKGROUND

The City of Columbia is seeking proposals for parking gate arms. City is looking to replace the current gate arms and add new gate arms over a period of five (5) years via a term and supply type contract which will be awarded to the contractor based on an evaluation process.

1.1 DUE DATE FOR PROPOSALS: Proposals may be submitted in a sealed envelope at the purchasing office **or** uploaded electronically on the City's E-bidding website at http://www.gocolumbiamo.com/Finance/purhome.php. No fax or e-mail proposals will be accepted. Sealed proposals must be delivered to the Purchasing Department, 701 E. Broadway, 5th Floor, Columbia, MO 65201 by the closing date and time. Proposals received after the appointed time will be determined non-responsive and will not be opened. Proposal must be in sealed envelope and marked in bold letters "RFP 5/2016 Parking Utility Software."

1.2 SCHEDULE OF ACTIVITIES:

DATE	ACTIVITY
September 23, 2016	Last day for written requests for additional information.
October 7, 2016	Request for Proposal is due by 5:00 p.m. CST
The above dates are target dates and may change.	Contract Start Date

2 GENERAL REQUIREMENTS

2.1 VALIDITY OF PROPOSALS: Respondents agree that proposals will remain firm for a period of ninety (90) calendar days after the date specified for the return of proposals.

2.2 REJECTION OF PROPOSALS: The City of Columbia reserves the right to reject any or all proposals received in response to this RFP, or to cancel the RFP if it is in the best interest of the City of Columbia to do so. Failure to furnish all information requested in this RFP may disqualify the proposal. Any exceptions to the requirements specified must be identified in the proposal.

2.3 WITHDRAWAL OF PROPOSALS: Any Offeror may withdraw their proposal at any time prior to the scheduled closing time for the receipt of proposals. However, no proposal will be withdrawn for a period of ninety (90) days after the scheduled closing time for the receipt of proposals.

2.4 ALTERATION OF SOLICITATION: The wording of the City of Columbia's solicitation may not be changed or altered in any manner. Respondents taking exception to any clause in whole or in part should do so by listing said exceptions on their letterhead and submitting them with their proposal; such exceptions will be evaluated and accepted or rejected by the City of Columbia, whose decision will be final.

2.5 RESPONSE MATERIAL OWNERSHIP: All material submitted regarding this RFP becomes the property of the City of Columbia.

2.6 INCURRING COSTS: The City of Columbia shall not be obligated or be liable for any cost incurred by Respondents prior to issuance of a Contract. All costs to prepare and submit a response to this solicitation shall be borne by the Respondent.

2.7 COLLUSION CLAUSE: Any agreement or collusion among Respondents and prospective Respondents to illegally restrain freedom of competition by agreement to fix prices, or otherwise, will render the proposals of such Respondents void.

2.8 CONTRACT DOCUMENTS: The final Contract between the City of Columbia and the Respondent will include by reference:

- Respondent's Proposal
- The Specifications, and the legal terms and conditions contained in this RFP.

2.9 FUNDS: Financial obligations of the City of Columbia payable after the current fiscal year are contingent upon funds for that purpose being appropriated. In the event funds are not appropriated, any resulting Contract will become null and void, without penalty to the City of Columbia.

2.10 TAX EXEMPTION: The City of Columbia is funded by public monies and as such has been approved by the State of Missouri for sales/use tax-exempt status. The Missouri tax identification number and certificate is available upon request by the successful Respondent.

2.11 RESPONSIBILITY: The City of Columbia reserves the right to require the apparent successful vendors to file proof of his/her ability to properly finance and execute the Contract, together with his/her record of successful completion of similar Contracts prior. The award of the Contract will be contingent upon providing acceptable proof and record of performance. *This information will become a part of the contents of the file and hence public record unless the Respondent indicates this material confidential and request this information be returned at the expense of the Respondent. This applies only to matters of financial reporting.*

2.12 PREVAILING WAGES: **Prevailing wage will apply.** All workers (subcontractors included if used) are to be paid not less than the prevailing hourly rate of wages as found by the State of Missouri's Division of Labor Standards, Annual Wage Order #23, which is attached to this bid document as Exhibit C. If offeror declares exemption from Prevailing Wage requirements, provide documentation with proposal response.

Contractor shall comply with all requirements of the prevailing wage law of Missouri Revised Statutes Sections 290.210 to 290.340, including the latest amendments thereto. This Contract shall be based upon payment by

Contractor and his subcontractors of wage rates not less than the prevailing hourly wage rate for each craft or classification of workers engaged on the work as determined by the Missouri Division of Labor Standards. The Missouri Division of Labor Standard Annual Wage Order applicable to this Project is attached as Exhibit C.

Contractor and each subcontractor shall keep an accurate record showing the names, occupations, and crafts of all workers employed, together with the number of hours worked by each worker and the actual wages paid to each worker. At all reasonable hours, such records shall be open to inspection by the Missouri Division of Labor Standards and City. The payroll records shall not be destroyed or removed from the State for at least one year after completion of the work.

Pursuant to Section 290.250 RSMo, Contractor shall forfeit as a penalty to City one hundred dollars ($100.00) for each workman employed, for each calendar day, or portion thereof, such workman is paid less than the said stipulated rates for any work done under said contract, by him or by any subcontractor under him. After completion of the work and before final payment can be made under this Contract, Contractor and each subcontractor must file with City an affidavit stating that they have fully complied with the provisions and requirements of the prevailing wage law of Missouri.

3 SCOPE OF WORK:

3.1 BACKGROUND: The parking utility is a division within the City of Columbia Public Works department. The utility maintains six (6) garages and eight (8) lots. The population of the City of Columbia is 115,000. All of our parking is located within a 1.5 square mile radius of the downtown area with 4,000 total parking spaces including garage and street parking. The parking garages are located at 8th & Walnut, 5th & Walnut, 6th & Cherry, 8th & Cherry, 10th & Cherry, and Short Street. City is looking to replace current gate arms with new ones and add gate arms to garages that do not currently have them, as listed in the specifications. The replacement gate arms will be phased in over a five year period and the contract will be setup as a term and supply contract with an award for year one (1) with up to four (4) annual renewal options in order to complete the entire project.

3.2 SPECIFICATIONS: Offeror must be able to meet or exceed specifications as listed below.

- Gate arm ticket shall include a bar code or QR code to be used either on paper or phone. Permit customers shall swipe their proximity card not insert it.
- Ability to track collections.

- Gate arm shall only allow a certain number of hotel guests/jurors/hourly parkers in at one time.
- Gate arm proximity card must be used at entry and exit before being allowed to be used at entry again, commonly referred to as "no pass-back."
- Gate arm shall send out text/email alerts in case of jamb/malfunction.
- Gate arm shall have the ability to remotely vend a gate.
- Reader shall have the ability to set a minimum amount to be charged on credit/debit cards.
- Gate arm has the ability to have audible instructions for customers.
- Gate arm has an audible intercom system.
- Gate arm reader shall be utilized with hotel proximity cards and permit proximity cards.
- Gate arm readers shall be programmed to work with hotel guest room key (hotel has 112 rooms/parking spots).
- Pay machine has the ability to accept/refill/recharge City's pre-paid parking card.
- Garage vacancies must be counted by vehicles crossing a loop (card must be swiped at entry and exit to be counted vacant), and be able to control for vacancy.
- Garage entry/exits must have two (2) ticket scanners in the event that one malfunctions, the other could still be utilized.
- Pay machine shall be user friendly with minimal keys and passwords needed and easy to trouble shoot.
- Gate arm must interface with Parkmobile, a pay-by-phone application.
- Gate arm must remain in the closed (down) position at all times. Arm shall allow someone to exit without paying only during free parking hours and must calculate how much is owed if timeframe encompasses both free and pay hours.
- Gate arm shall accept vouchers for special events, meeting attendees, etc.
- Gate arm payment module must be PCI, chip/pin compliant.
- Pay machine will have the option to turn-off or forego the dispersal of change.

ENTRANCE GATE:

Vehicle enters the garage and pulls a ticket from the machine or swipes their proximity card. Ticket prints the barcode or QR code, the date and

time, ticket number and any other pertinent information. The gate arm opens once a ticket is pulled or card is swiped, allowing vehicle access to parking areas.

EXIT GATE:
Vehicle will enter the exit lane and may swipe their proximity card and gate arm will open. Vehicles without a proximity card will scan their entrance receipt and may pay via credit card or exact change.

REPORTS:
City of Columbia shall be able to access a variety of reports and pull various data based on certain criteria to include specific garages, vacancies, daily revenues, access control as well as others. Reports shall be downloadable and can be saved to Microsoft Word, Excel or other files as needed.

3.3 GARAGE LOCATIONS AND PERTINENT INFORMATION:

Short Street Garage –

Plan to replace existing gate arm system. There is currently an island and most infrastructure in place (cut-throughs, fiber optics, phone lines, conduit, etc). Project will require one (1) entry machine replacement, one (1) exit machine replacement (card payment only), replacement of two (2) pay on foot machines (pay on foot machines must have the ability to take cards and cash), and possibly another gate arm with only a proximity card reader at the exit. This garage is a mixture of hourly, permit, reserved, hotel guest, and valet spaces.

Plaza Garage –

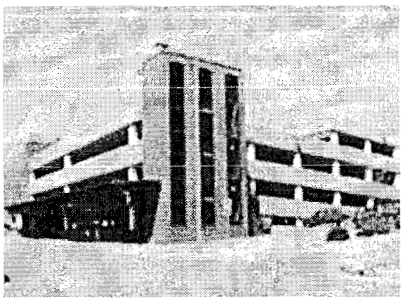

Entrance

t

Plan to replace existing system that utilizes gate arms for a pull ticket or prox card and swipe card or cashier at booth upon leaving. There are islands and most infrastructure already in place here, though it is a very basic system and thus new conduit for fiber optics, phone lines, etc. may have to be installed. Location will require installation of two (2) entry machines, one (1) exit machine (card payment only), and one (1) exit gate arm with a proximity card reader only, and two (2) pay on foot machines (pay on foot machines need ability to take card and cash). This garage is a mixture of hourly, permit, and reserved spaces.

5th & Walnut –

Entrance

Entrance/Exit

This location currently utilizes a pay on arrival at multi-space machine system. There is not a current gate arm system in place. There are no existing islands or cut throughs. Conduit and phone lines run to existing multi-space machine system. Islands will need to be installed along with one (1) entry machine, one (1) exit machine (card payment only), possibly one (1) exit gate arm with only proximity card reader, and two (2) pay on foot machines (pay on foot machines need ability to take cards and cash). This garage is a mixture of hourly and permit spaces.

6th & Cherry –

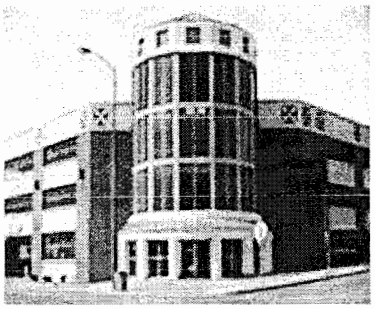

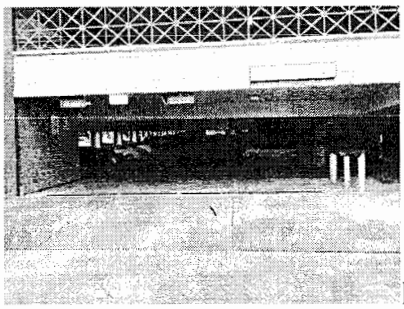

Entrance/Exit

Entrance

This location currently utilizes a pay on arrival at multi-space machine system. There is not a current gate arm system in place and there are no existing islands or cut throughs. There is conduit and phone lines run to existing multi-space machines. Location will need islands, one (1) entry machine, one (1) exit machine (card payment only), possibly one (1) exit gate arm with only proximity card reader, and two (2) pay on foot machines (pay on foot machines need ability to take cards and cash). This garage is a mixture of hourly and permit spaces.

10th & Cherry –

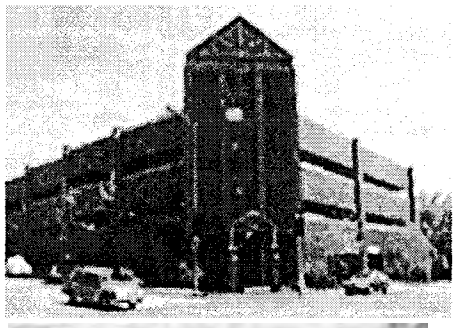

Entrance/Exit

This location currently utilizes a pay on arrival at multi-space machine system. There is not a current gate arm system in place and there are no existing cut throughs. Conduit and phone lines run to existing multi-space pay machines. Islands do exist. Location will need two (2) entry machines, two (2) exit machines (card payment only), and two (2) pay on foot machines (pay on foot machines need ability to take cards and cash). This garage is a mixture of hourly and permit spaces.

8th & Cherry –

Entrance

Exit

This location currently utilizes single space coin only meters for hourly parking. There is not a current gate arm system in place there are no existing cut throughs. As there are no existing pay machines, conduit and phone lines will most likely need to be installed. Islands do exist. Location will need one (1) entry machine, one (1) exit machine (card payment only), and two (2) pay on foot machines (pay on foot machines need ability to take card and cash). This garage is a mixture of hourly, permit, reserved and valet spaces.

4 OFFERORS INSTRUCTIONS:

4.1 FORMAT OF PROPOSAL: The offerors' proposal should be a clear, concise description of how the offerer intends to provide the services set forth herein. To receive high marks, the proposal should outline how the offeror plans to address each key issue noted in the Scope of Work.

Offeror submission shall be in the following format:

1. TRANSMITTAL LETTER: All offerors must submit a transmittal letter prepared on their letterhead. An individual who is authorized to bind the Firm to all statements, services, and prices contained in the proposal for both the primary and subcontractor must sign the letter. In addition, a letter from any subcontractor to be used in the service should be included. This letter must be signed by an individual who is authorized to bind the firm and should give a brief description of the work they are to perform.

2. QUALIFICATIONS/OTHER INFORMATION: The purpose of this section is to provide offerors the opportunity to present their experience and qualifications for proposal on this project. City is seeking a contractor who has extensive experience with comparable projects, who has the breadth and quality of resources necessary to ensure a minimum number of problems, and who can promptly and adequately resolve unforeseen problems. This section must include the following components:
   a. A brief description of the history and background of the offeror's firm, including the date established and ownership structure.
   b. Name, address, phone and fax number(s) and email address of firm.
   c. Name and title of primary contact person.
   d. Statement outlining the scope of the staff resources and range of the specialties offered by your firm.
   e. List of similar work performed for other municipalities or agencies, including a description of work and the name of municipality or agency, and the action taken as a result of the work. A list of references shall be included.
   f. Discussion explaining why the Firm believes the City of Columbia would benefit from selection of the Firm to do the work.
   g. Description of the approach the Firm shall take to complete the work, including an estimate of the total time needed for the Firm to complete the work.
   h. Summary of any arrangements the Firm may be making with any other firm for assistance on this work project.
   i. Statement of your understanding of the work and work plan. Include a description of the activities, and tasks that shall be undertaken to complete each of the objectives listed, but not necessarily limited to the specific objectives listed.

3. INSTALLATION AND IMPLEMENTATION
   a. Describe your firm's approach to installation and implementation for the option which you are proposing.

4. PRICING: Pricing shall be broken out and clearly separated from the rest of the proposal.

5. WARRANTY: Describe any warranty period you offer on your products.

6. EXPERIENCE:

a. Describe the experience of your implementation and support team, including time with the company, years of experience with the proposed system, and relevant certifications held by the team.
b. Describe your firm's experience with projects of similar scope and size. Include project name, total sale amount, distance from City of Columbia, and a customer contact that we may reference.
c. Describe your firm's history and experience in the industry. Include financial statements and any other information that would assist the City of Columbia in assessing your firm's financial stability. Note that RFP submittals are public records. If the offeror would prefer this information remain confidential, financial statements may be provided during the short-list interview stage. Note that financial stability is a key factor to success in this long-term project so it must be provided at some point.

4.2 BID BOND: If bid amount reaches $25,000 or above, bidder shall submit a bid bond, in an amount of not less than 5% of the total bid amount (including all possible alternates), to the Division of Purchasing, prior to the bid closing date and time. Acceptable forms of Bid Bonds (Exhibit D):

1.) Original bond or a certified check, payable to the City of Columbia.
2.) An Electronic Bid Bond, provided by Surety2000.com, (verified by an eleven-digit code which is generated by the Surety2000 system) and provided by the Offeror in his/her RFP submission.
3.) Bid bonds, regardless of the format, must be issued by a surety company authorized to conduct business in the State of Missouri, and carrying a rating of A+ or better as listed in the A.M. Best or equivalent rating guide. The bid bond shall guarantee good faith on the part of the Bidder.

4.3 W-9 SUBMISSION: Offeror shall provide a current W-9 by using any of the following methods (Exhibit A):

1. Uploading and attaching to RFP response
2. Emailing the W-9 to the Procurement Officer named on the header of this document.
3. Mail to City of Columbia Purchasing Division, 701 E Broadway, 5th Floor, Columbia, MO 65201

4.4 STATEMENT OF BIDDER'S QUALIFICATIONS (Exhibit E): Offeror shall fill out Statement of Bidder's Qualifications and submit with RFP document.

4.5 SUBCONTRACTING: If offeror proposes to use subcontractors for this project, offeror shall supply the information below for each subcontractor offeror proposes to use on the project. This information shall be submitted no later than three business days after proposal closing.

- Subcontractor Name/Address
- Work Assigned
- DBE Firm

4 EVALUATION AND AWARD

5.1 EVALUATION: City of Columbia reserves the right to reject any or all proposals, to negotiate with any respondent considered qualified, or to make an award without further discussion.

Evaluation will be based on all elements of response to proposal criteria.

It is the purpose of this Request for Proposal to obtain data as complete as possible from each respondent that will enable the City to determine which prospective firm is best able to provide all the criteria to be considered in the award of this contract. Evaluation of the respondents qualifying as finalists will be based on the following criteria, listed in relative order of importance:

30 points	Ability to provide services outlined in Scope of Work
30 points	Pricing
20 points	Ease of Implementation
15 points	Technical Requirements
5 points	General Information (references, quality of proposal, etc)

Failure of the Offeror to provide in their proposal any information requested in this RFP may result in disqualification of the proposal and shall be the responsibility of the proposing individual or firm.

During the evaluation process, discussions may be conducted with Offerors who submit proposals determined to be reasonably susceptible of being selected for an award. It will be the recommendation of the evaluation committee if discussions for clarification are needed.

The objective of the evaluation committee will be to recommend the Offeror whose proposal is most responsive to City needs while within the available resources. The specifications within this RFP represent the minimum performance necessary for response.

5.2 SELECTION AND AWARD: City reserves the right to reject any or all proposals, to negotiate with any respondent considered qualified, or to make an award without further discussion.

Form **W-9**
(Rev. October 2007)
Department of the Treasury
Internal Revenue Service

Request for Taxpayer Identification Number and Certification

Give form to the requester. Do not send to the IRS.

Print or type
See Specific Instructions on page 2.

Name (as shown on your income tax return)

Business name, if different from above

Check appropriate box: ☐ Individual/Sole proprietor ☐ Corporation ☐ Partnership
☐ Limited liability company. Enter the tax classification (D=disregarded entity, C=corporation, P=partnership) ▶ .....
☐ Other (see instructions) ▶

☐ Exempt payee

Address (number, street, and apt. or suite no.)

Requester's name and address (optional)

City, state, and ZIP code

List account number(s) here (optional)

Part I Taxpayer Identification Number (TIN)

Enter your TIN in the appropriate box. The TIN provided must match the name given on Line 1 to avoid backup withholding. For individuals, this is your social security number (SSN). However, for a resident alien, sole proprietor, or disregarded entity, see the Part I instructions on page 3. For other entities, it is your employer identification number (EIN). If you do not have a number, see *How to get a TIN* on page 3.

Note. If the account is in more than one name, see the chart on page 4 for guidelines on whose number to enter.

Social security number
: :

or

Employer identification number
:

Part II Certification

Under penalties of perjury, I certify that:

1. The number shown on this form is my correct taxpayer identification number (or I am waiting for a number to be issued to me), and
2. I am not subject to backup withholding because: (a) I am exempt from backup withholding, or (b) I have not been notified by the Internal Revenue Service (IRS) that I am subject to backup withholding as a result of a failure to report all interest or dividends, or (c) the IRS has notified me that I am no longer subject to backup withholding, and
3. I am a U.S. citizen or other U.S. person (defined below).

Certification instructions. You must cross out item 2 above if you have been notified by the IRS that you are currently subject to backup withholding because you have failed to report all interest and dividends on your tax return. For real estate transactions, item 2 does not apply. For mortgage interest paid, acquisition or abandonment of secured property, cancellation of debt, contributions to an individual retirement arrangement (IRA), and generally, payments other than interest and dividends, you are not required to sign the Certification, but you must provide your correct TIN. See the instructions on page 4.

Sign Here | **Signature of U.S. person ▶** | **Date ▶**

General Instructions

Section references are to the Internal Revenue Code unless otherwise noted.

Purpose of Form

A person who is required to file an information return with the IRS must obtain your correct taxpayer identification number (TIN) to report, for example, income paid to you, real estate transactions, mortgage interest you paid, acquisition or abandonment of secured property, cancellation of debt, or contributions you made to an IRA.

Use Form W-9 only if you are a U.S. person (including a resident alien), to provide your correct TIN to the person requesting it (the requester) and, when applicable, to:

1. Certify that the TIN you are giving is correct (or you are waiting for a number to be issued),

2. Certify that you are not subject to backup withholding, or

3. Claim exemption from backup withholding if you are a U.S. exempt payee. If applicable, you are also certifying that as a U.S. person, your allocable share of any partnership income from a U.S. trade or business is not subject to the withholding tax on foreign partners' share of effectively connected income.

Note. If a requester gives you a form other than Form W-9 to request your TIN, you must use the requester's form if it is substantially similar to this Form W-9.

Definition of a U.S. person. For federal tax purposes, you are considered a U.S. person if you are:

- An individual who is a U.S. citizen or U.S. resident alien,
- A partnership, corporation, company, or association created or organized in the United States or under the laws of the United States,
- An estate (other than a foreign estate), or
- A domestic trust (as defined in Regulations section 301.7701-7).

Special rules for partnerships. Partnerships that conduct a trade or business in the United States are generally required to pay a withholding tax on any foreign partners' share of income from such business. Further, in certain cases where a Form W-9 has not been received, a partnership is required to presume that a partner is a foreign person, and pay the withholding tax. Therefore, if you are a U.S. person that is a partner in a partnership conducting a trade or business in the United States, provide Form W-9 to the partnership to establish your U.S. status and avoid withholding on your share of partnership income.

The person who gives Form W-9 to the partnership for purposes of establishing its U.S. status and avoiding withholding on its allocable share of net income from the partnership conducting a trade or business in the United States is in the following cases:

- The U.S. owner of a disregarded entity and not the entity,

- The U.S. grantor or other owner of a grantor trust and not the trust, and
- The U.S. trust (other than a grantor trust) and not the beneficiaries of the trust.

Foreign person. If you are a foreign person, do not use Form W-9. Instead, use the appropriate Form W-8 (see Publication 515, Withholding of Tax on Nonresident Aliens and Foreign Entities).

Nonresident alien who becomes a resident alien. Generally, only a nonresident alien individual may use the terms of a tax treaty to reduce or eliminate U.S. tax on certain types of income. However, most tax treaties contain a provision known as a "saving clause." Exceptions specified in the saving clause may permit an exemption from tax to continue for certain types of income even after the payee has otherwise become a U.S. resident alien for tax purposes.

If you are a U.S. resident alien who is relying on an exception contained in the saving clause of a tax treaty to claim an exemption from U.S. tax on certain types of income, you must attach a statement to Form W-9 that specifies the following five items:

1. The treaty country. Generally, this must be the same treaty under which you claimed exemption from tax as a nonresident alien.

2. The treaty article addressing the income.

3. The article number (or location) in the tax treaty that contains the saving clause and its exceptions.

4. The type and amount of income that qualifies for the exemption from tax.

5. Sufficient facts to justify the exemption from tax under the terms of the treaty article.

Example. Article 20 of the U.S.-China income tax treaty allows an exemption from tax for scholarship income received by a Chinese student temporarily present in the United States. Under U.S. law, this student will become a resident alien for tax purposes if his or her stay in the United States exceeds 5 calendar years. However, paragraph 2 of the first Protocol to the U.S.-China treaty (dated April 30, 1984) allows the provisions of Article 20 to continue to apply even after the Chinese student becomes a resident alien of the United States. A Chinese student who qualifies for this exception (under paragraph 2 of the first protocol) and is relying on this exception to claim an exemption from tax on his or her scholarship or fellowship income would attach to Form W-9 a statement that includes the information described above to support that exemption.

If you are a nonresident alien or a foreign entity not subject to backup withholding, give the requester the appropriate completed Form W-8.

What is backup withholding? Persons making certain payments to you must under certain conditions withhold and pay to the IRS 28% of such payments. This is called "backup withholding." Payments that may be subject to backup withholding include interest, tax-exempt interest, dividends, broker and barter exchange transactions, rents, royalties, nonemployee pay, and certain payments from fishing boat operators. Real estate transactions are not subject to backup withholding.

You will not be subject to backup withholding on payments you receive if you give the requester your correct TIN, make the proper certifications, and report all your taxable interest and dividends on your tax return.

Payments you receive will be subject to backup withholding if:

1. You do not furnish your TIN to the requester,

2. You do not certify your TIN when required (see the Part II instructions on page 3 for details),

3. The IRS tells the requester that you furnished an incorrect TIN,

4. The IRS tells you that you are subject to backup withholding because you did not report all your interest and dividends on your tax return (for reportable interest and dividends only), or

5. You do not certify to the requester that you are not subject to backup withholding under 4 above (for reportable interest and dividend accounts opened after 1983 only).

Certain payees and payments are exempt from backup withholding. See the instructions below and the separate Instructions for the Requester of Form W-9.

Also see *Special rules for partnerships* on page 1.

Penalties

Failure to furnish TIN. If you fail to furnish your correct TIN to a requester, you are subject to a penalty of $50 for each such failure unless your failure is due to reasonable cause and not to willful neglect.

Civil penalty for false information with respect to withholding. If you make a false statement with no reasonable basis that results in no backup withholding, you are subject to a $500 penalty.

Criminal penalty for falsifying information. Willfully falsifying certifications or affirmations may subject you to criminal penalties including fines and/or imprisonment.

Misuse of TINs. If the requester discloses or uses TINs in violation of federal law, the requester may be subject to civil and criminal penalties.

Specific Instructions

Name

If you are an individual, you must generally enter the name shown on your income tax return. However, if you have changed your last name, for instance, due to marriage without informing the Social Security Administration of the name change, enter your first name, the last name shown on your social security card, and your new last name.

If the account is in joint names, list first, and then circle, the name of the person or entity whose number you entered in Part I of the form.

Sole proprietor. Enter your individual name as shown on your income tax return on the "Name" line. You may enter your business, trade, or "doing business as (DBA)" name on the "Business name" line.

Limited liability company (LLC). Check the "Limited liability company" box only and enter the appropriate code for the tax classification ("D" for disregarded entity, "C" for corporation, "P" for partnership) in the space provided.

For a single-member LLC (including a foreign LLC with a domestic owner) that is disregarded as an entity separate from its owner under Regulations section 301.7701-3, enter the owner's name on the "Name" line. Enter the LLC's name on the "Business name" line.

For an LLC classified as a partnership or a corporation, enter the LLC's name on the "Name" line and any business, trade, or DBA name on the "Business name" line.

Other entities. Enter your business name as shown on required federal tax documents on the "Name" line. This name should match the name shown on the charter or other legal document creating the entity. You may enter any business, trade, or DBA name on the "Business name" line.

Note. You are requested to check the appropriate box for your status (individual/sole proprietor, corporation, etc.).

Exempt Payee

If you are exempt from backup withholding, enter your name as described above and check the appropriate box for your status, then check the "Exempt payee" box in the line following the business name, sign and date the form.

Generally, individuals (including sole proprietors) are not exempt from backup withholding. Corporations are exempt from backup withholding for certain payments, such as interest and dividends.

Note. If you are exempt from backup withholding, you should still complete this form to avoid possible erroneous backup withholding.

The following payees are exempt from backup withholding:

1. An organization exempt from tax under section 501(a), any IRA, or a custodial account under section 403(b)(7) if the account satisfies the requirements of section 401(f)(2),

2. The United States or any of its agencies or instrumentalities,

3. A state, the District of Columbia, a possession of the United States, or any of their political subdivisions or instrumentalities,

4. A foreign government or any of its political subdivisions, agencies, or instrumentalities, or

5. An international organization or any of its agencies or instrumentalities.

Other payees that may be exempt from backup withholding include:

6. A corporation,

7. A foreign central bank of issue,

8. A dealer in securities or commodities required to register in the United States, the District of Columbia, or a possession of the United States,

9. A futures commission merchant registered with the Commodity Futures Trading Commission,

10. A real estate investment trust,

11. An entity registered at all times during the tax year under the Investment Company Act of 1940,

12. A common trust fund operated by a bank under section 584(a),

13. A financial institution,

14. A middleman known in the investment community as a nominee or custodian, or

15. A trust exempt from tax under section 664 or described in section 4947.

The chart below shows types of payments that may be exempt from backup withholding. The chart applies to the exempt payees listed above, 1 through 15.

IF the payment is for . . .	THEN the payment is exempt for . . .
Interest and dividend payments	All exempt payees except for 9
Broker transactions	Exempt payees 1 through 13. Also, a person registered under the Investment Advisers Act of 1940 who regularly acts as a broker
Barter exchange transactions and patronage dividends	Exempt payees 1 through 5
Payments over $600 required to be reported and direct sales over $5,000[1]	Generally, exempt payees 1 through 7[2]

[1] See Form 1099-MISC, Miscellaneous Income, and its instructions.

[2] However, the following payments made to a corporation (including gross proceeds paid to an attorney under section 6045(f), even if the attorney is a corporation) and reportable on Form 1099-MISC are not exempt from backup withholding: medical and health care payments, attorneys' fees, and payments for services paid by a federal executive agency.

Part I. Taxpayer Identification Number (TIN)

Enter your TIN in the appropriate box. If you are a resident alien and you do not have and are not eligible to get an SSN, your TIN is your IRS individual taxpayer identification number (ITIN). Enter it in the social security number box. If you do not have an ITIN, see *How to get a TIN* below.

If you are a sole proprietor and you have an EIN, you may enter either your SSN or EIN. However, the IRS prefers that you use your SSN.

If you are a single-member LLC that is disregarded as an entity separate from its owner (see *Limited liability company (LLC)* on page 2), enter the owner's SSN (or EIN, if the owner has one). Do not enter the disregarded entity's EIN. If the LLC is classified as a corporation or partnership, enter the entity's EIN.

Note. See the chart on page 4 for further clarification of name and TIN combinations.

How to get a TIN. If you do not have a TIN, apply for one immediately. To apply for an SSN, get Form SS-5, Application for a Social Security Card, from your local Social Security Administration office or get this form online at *www.ssa.gov*. You may also get this form by calling 1-800-772-1213. Use Form W-7, Application for IRS Individual Taxpayer Identification Number, to apply for an ITIN, or Form SS-4, Application for Employer Identification Number, to apply for an EIN. You can apply for an EIN online by accessing the IRS website at *www.irs.gov/businesses* and clicking on Employer Identification Number (EIN) under Starting a Business. You can get Forms W-7 and SS-4 from the IRS by visiting *www.irs.gov* or by calling 1-800-TAX-FORM (1-800-829-3676).

If you are asked to complete Form W-9 but do not have a TIN, write "Applied For" in the space for the TIN, sign and date the form, and give it to the requester. For interest and dividend payments, and certain payments made with respect to readily tradable instruments, generally you will have 60 days to get a TIN and give it to the requester before you are subject to backup withholding on payments. The 60-day rule does not apply to other types of payments. You will be subject to backup withholding on all such payments until you provide your TIN to the requester.

Note. Entering "Applied For" means that you have already applied for a TIN or that you intend to apply for one soon.

Caution: *A disregarded domestic entity that has a foreign owner must use the appropriate Form W-8.*

Part II. Certification

To establish to the withholding agent that you are a U.S. person, or resident alien, sign Form W-9. You may be requested to sign by the withholding agent even if items 1, 4, and 5 below indicate otherwise.

For a joint account, only the person whose TIN is shown in Part I should sign (when required). Exempt payees, see *Exempt Payee* on page 2.

Signature requirements. Complete the certification as indicated in 1 through 5 below.

1. Interest, dividend, and barter exchange accounts opened before 1984 and broker accounts considered active during 1983. You must give your correct TIN, but you do not have to sign the certification.

2. Interest, dividend, broker, and barter exchange accounts opened after 1983 and broker accounts considered inactive during 1983. You must sign the certification or backup withholding will apply. If you are subject to backup withholding and you are merely providing your correct TIN to the requester, you must cross out item 2 in the certification before signing the form.

3. Real estate transactions. You must sign the certification. You may cross out item 2 of the certification.

4. Other payments. You must give your correct TIN, but you do not have to sign the certification unless you have been notified that you have previously given an incorrect TIN. "Other payments" include payments made in the course of the requester's trade or business for rents, royalties, goods (other than bills for merchandise), medical and health care services (including payments to corporations), payments to a nonemployee for services, payments to certain fishing boat crew members and fishermen, and gross proceeds paid to attorneys (including payments to corporations).

5. Mortgage interest paid by you, acquisition or abandonment of secured property, cancellation of debt, qualified tuition program payments (under section 529), IRA, Coverdell ESA, Archer MSA or HSA contributions or distributions, and pension distributions. You must give your correct TIN, but you do not have to sign the certification.

What Name and Number To Give the Requester

For this type of account:	Give name and SSN of:
1. Individual	The individual
2. Two or more individuals (joint account)	The actual owner of the account or, if combined funds, the first individual on the account [1]
3. Custodian account of a minor (Uniform Gift to Minors Act)	The minor [2]
4. a. The usual revocable savings trust (grantor is also trustee)	The grantor-trustee [1]
b. So-called trust account that is not a legal or valid trust under state law	The actual owner [1]
5. Sole proprietorship or disregarded entity owned by an individual	The owner [3]
For this type of account:	**Give name and EIN of:**
6. Disregarded entity not owned by an individual	The owner
7. A valid trust, estate, or pension trust	Legal entity [4]
8. Corporate or LLC electing corporate status on Form 8832	The corporation
9. Association, club, religious, charitable, educational, or other tax-exempt organization	The organization
10. Partnership or multi-member LLC	The partnership
11. A broker or registered nominee	The broker or nominee
12. Account with the Department of Agriculture in the name of a public entity (such as a state or local government, school district, or prison) that receives agricultural program payments	The public entity

[1] List first and circle the name of the person whose number you furnish. If only one person on a joint account has an SSN, that person's number must be furnished.

[2] Circle the minor's name and furnish the minor's SSN.

[3] You must show your individual name and you may also enter your business or "DBA" name on the second name line. You may use either your SSN or EIN (if you have one), but the IRS encourages you to use your SSN.

[4] List first and circle the name of the trust, estate, or pension trust. (Do not furnish the TIN of the personal representative or trustee unless the legal entity itself is not designated in the account title.) Also see *Special rules for partnerships* on page 1.

Note. If no name is circled when more than one name is listed, the number will be considered to be that of the first name listed.

Secure Your Tax Records from Identity Theft

Identity theft occurs when someone uses your personal information such as your name, social security number (SSN), or other identifying information, without your permission, to commit fraud or other crimes. An identity thief may use your SSN to get a job or may file a tax return using your SSN to receive a refund.

To reduce your risk:

- Protect your SSN,
- Ensure your employer is protecting your SSN, and
- Be careful when choosing a tax preparer.

Call the IRS at 1-800-829-1040 if you think your identity has been used inappropriately for tax purposes.

Victims of identity theft who are experiencing economic harm or a system problem, or are seeking help in resolving tax problems that have not been resolved through normal channels, may be eligible for Taxpayer Advocate Service (TAS) assistance. You can reach TAS by calling the TAS toll-free case intake line at 1-877-777-4778 or TTY/TDD 1-800-829-4059.

Protect yourself from suspicious emails or phishing schemes. Phishing is the creation and use of email and websites designed to mimic legitimate business emails and websites. The most common act is sending an email to a user falsely claiming to be an established legitimate enterprise in an attempt to scam the user into surrendering private information that will be used for identity theft.

The IRS does not initiate contacts with taxpayers via emails. Also, the IRS does not request personal detailed information through email or ask taxpayers for the PIN numbers, passwords, or similar secret access information for their credit card, bank, or other financial accounts.

If you receive an unsolicited email claiming to be from the IRS, forward this message to *phishing@irs.gov.* You may also report misuse of the IRS name, logo, or other IRS personal property to the Treasury Inspector General for Tax Administration at 1-800-366-4484. You can forward suspicious emails to the Federal Trade Commission at: *spam@uce.gov* or contact them at *www.consumer.gov/idtheft* or 1-877-IDTHEFT(438-4338).

Visit the IRS website at *www.irs.gov* to learn more about identity theft and how to reduce your risk.

Privacy Act Notice

Section 6109 of the Internal Revenue Code requires you to provide your correct TIN to persons who must file information returns with the IRS to report interest, dividends, and certain other income paid to you, mortgage interest you paid, the acquisition or abandonment of secured property, cancellation of debt, or contributions you made to an IRA, or Archer MSA or HSA. The IRS uses the numbers for identification purposes and to help verify the accuracy of your tax return. The IRS may also provide this information to the Department of Justice for civil and criminal litigation, and to cities, states, the District of Columbia, and U.S. possessions to carry out their tax laws. We may also disclose this information to other countries under a tax treaty, to federal and state agencies to enforce federal nontax criminal laws, or to federal law enforcement and intelligence agencies to combat terrorism.

You must provide your TIN whether or not you are required to file a tax return. Payers must generally withhold 28% of taxable interest, dividend, and certain other payments to a payee who does not give a TIN to a payer. Certain penalties may also apply.

NOTICE TO VENDORS

EXHIBIT B

Sections 285.525 To 285.550 RSMo.

Pursuant to section 285.530 (1) RSMo., No business entity or employer shall knowingly employ, hire for employment, or continue to employ an unauthorized alien to perform work within the State of Missouri.

As a condition for the award of any contract or grant in excess of five thousand dollars by the state or by any political subdivision of the state to a business entity, or for any business entity receiving a state-administered or subsidized tax credit, tax abatement, or loan from the state, the business entity shall, by sworn affidavit and provision of documentation, affirm its enrollment and participation in a federal work authorization program with respect to the employees working in connection with the contracted services. Every such business entity shall sign an affidavit affirming that it does not knowingly employ any person who is an unauthorized alien in connection with the contracted services. {RSMo 285.530 (2)}

An Employer may enroll and participate in a federal work authorization program and shall verify the employment eligibility of every employee in the employer's hire whose employment commences after the employer enrolls in a federal work authorization program. **The E-verify system issues a Memorandum of Understanding once enrollment is complete; the City of Columbia requires a copy of this document be attached to the Work Authorization Affidavit.** The employer shall retain a copy of the dated verification report received from the federal government. Any business entity that participates in such program shall have an affirmative defense that such business entity has not violated subsection 1 of this section. {RSMo 285.530 (4)}

For vendors that are not already enrolled and participating in a federal work authorization program, E-Verify is an example of this type of program. Information regarding E-Verify is available at:
http://www.dhs.gov/e-verify

EXHIBIT B

CITY OF COLUMBIA, MISSOURI
WORK AUTHORIZATION AFFIDAVIT
PURSUANT TO 285.530 RSMo
(FOR ALL BIDS IN EXCESS OF $5,000.00)

County of_____)
)SS.
State of _____)

My name is _____. I am an authorized agent of _____(Bidder). This business is enrolled and participates in a federal work authorization program for all employees working in connection with services provided to the City of Columbia. This business does not knowingly employ any person who is an unauthorized alien in connection with the services being provided. **Documentation of participation in a federal work authorization program is attached to this affidavit.**

Furthermore, all subcontractors working on this contract shall affirmatively state in writing in their contacts that they are not in violation of Section 285.530.1 RSMo and shall not thereafter be in violation. Alternatively, a subcontractor may submit a sworn affidavit under penalty of perjury that all employees are lawfully present in the United States.

_____
Affiant

_____
Printed Name

Personally appeared before me, a Notary Public, within and for the County of _____,
State of Missouri, the person whose signature appears above, PERSONALLY AND KNOWN TO ME AND ACKNOWLEDGED, that signed the foregoing Affidavit for the purposes therein stated.

Subscribed and sworn to me this_____day of_____, 20_____.
My Commission expires_____, 20___.

_____
(Notary Public)

Exhibit C

Missouri
Division of Labor Standards

WAGE AND HOUR SECTION

JEREMIAH W. (JAY) NIXON, Governor

Annual Wage Order No. 23

Section 010

BOONE COUNTY

In accordance with Section 290.262 RSMo 2000, within thirty (30) days after a certified copy of this Annual Wage Order has been filed with the Secretary of State as indicated below, any person who may be affected by this Annual Wage Order may object by filing an objection in triplicate with the Labor and Industrial Relations Commission, P.O. Box 599, Jefferson City, MO 65102-0599. Such objections must set forth in writing the specific grounds of objection. Each objection shall certify that a copy has been furnished to the Division of Labor Standards, P.O. Box 449, Jefferson City, MO 65102-0449 pursuant to 8 CSR 20-5.010(1). A certified copy of the Annual Wage Order has been filed with the Secretary of State of Missouri.

Original Signed by
John E. Lindsey, Director
Division of Labor Standards

This Is A True And Accurate Copy Which Was Filed With The Secretary of State: March 10, 2016

Last Date Objections May Be Filed: **April 11, 2016**

Prepared by Missouri Department of Labor and Industrial Relations

OCCUPATIONAL TITLE	** Date of Increase	*	Basic Hourly Rates	Over-Time Schedule	Holiday Schedule	Total Fringe Benefits
Asbestos Worker (H & F) Insulator			$32.30	55	60	$21.41
Boilermaker	7/16		$35.93	57	7	$28.33
Bricklayer and Stone Mason			$29.26	59	7	$16.91
Carpenter	6/16		$25.16	60	15	$16.10
Cement Mason			$27.55	9	3	$12.20
Communication Technician	6/16		$31.80	28	7	$12.90 + 13%
Electrician (Inside Wireman)	6/16		$31.80	28	7	$12.90 + 13%
Electrician (Outside-Line Construction\Lineman)			$42.27	43	45	$5.25 + 36%
Lineman Operator			$36.45	43	45	$5.25 + 36%
Groundman			$28.13	43	45	$5.25 + 36%
Elevator Constructor		a	$46.04	26	54	$31.645
Glazier	6/16		$26.87	122	76	$11.78
Ironworker			$28.41	11	8	$24.04
Laborer (Building):						
General			$22.36	42	44	$13.19
First Semi-Skilled			$24.36	42	44	$13.19
Second Semi-Skilled			$23.36	42	44	$13.19
Lather			USE CARPENTER RATE			
Linoleum Layer and Cutter	6/16		$25.04	60	15	$16.10
Marble Mason			$21.66	124	74	$12.68
Marble Finisher			$14.14	124	74	$9.08
Millwright	6/16		$26.16	60	15	$16.10
Operating Engineer						
Group I	6/16		$28.86	86	66	$24.98
Group II	6/16		$28.86	86	66	$24.98
Group III	6/16		$27.61	86	66	$24.98
Group III-A	6/16		$28.86	86	66	$24.98
Group IV	6/16		$26.63	86	66	$24.98
Group V	6/16		$29.56	86	66	$24.98
Painter	6/16		$23.24	18	7	$11.78
Pile Driver	6/16		$26.16	60	15	$16.10
Pipe Fitter	7/16	b	$38.00	91	69	$26.93
Plasterer			$26.09	94	5	$12.25
Plumber	7/16	b	$38.00	91	69	$26.93
Roofer \ Waterproofer			$29.30	12	4	$14.87
Sheet Metal Worker	7/16		$31.34	40	23	$17.04
Sprinkler Fitter - Fire Protection	7/16		$33.49	33	19	$19.45
Terrazzo Worker			$28.73	124	74	$14.38
Terrazzo Finisher			$18.68	124	74	$14.38
Tile Setter			$21.66	124	74	$12.68
Tile Finisher			$14.14	124	74	$9.08
Traffic Control Service Driver			$26.415	22	55	$9.045
Truck Driver-Teamster						
Group I			$25.30	101	5	$10.70
Group II			$25.95	101	5	$10.70
Group III			$25.45	101	5	$10.70
Group IV			$25.95	101	5	$10.70

Fringe Benefit Percentage is of the Basic Hourly Rate

**Annual Incremental Increase

OCCUPATIONAL TITLE	** Date of Increase	Basic Hourly Rates	Over-Time Schedule	Holiday Schedule	Total Fringe Benefits

* Welders receive rate prescribed for the occupational title performing operation to which welding is incidental.

Use Building Construction Rates on Building construction in accordance with the classifications of construction work established in 8 CSR 30-3.040(2).

Use Heavy Construction Rates on Highway and Heavy construction in accordance with the classifications of construction work established in 8 CSR 30-3.040(3).

a - Vacation: Employees over 5 years - 8%; Employees under 5 years - 6%
**b - All work over $7 Mil. Total Mech. Contract - $38.00, Fringes - $26.93
All work under $7 Mil. Total Mech. Contract - $36.66, Fringes - $21.49
c - Vacation: Employees after 1 year - 2%; Employees after 2 years - 4%; Employees after 10 years - 6%

REPLACEMENT PAGE
BOONE COUNTY
BUILDING CONSTRUCTION - OVERTIME SCHEDULE

FED: Minimum requirement per Fair Labor Standards Act means time and one-half (1 ½) shall be paid for all work in excess of forty (40) hours per work week.

NO. 9: Means the regular workday starting time of 8:00 a.m. (and resulting quitting time of 4:30 p.m.) may be moved forward to 6:00 a.m. or delayed one hour to 9:00 a.m. All work performed in excess of the regular work day and on Saturday shall be compensated at one and one-half (1½) times the regular pay. In the event time is lost during the work week due to weather conditions, the Employer may schedule work on the following Saturday at straight time. All work accomplished on Sunday and holidays shall be compensated for at double the regular rate of wages. The work week shall be Monday through Friday, except for midweek holidays.

NO. 11: Means eight (8) hours shall constitute a day's work, with the starting time to be established between 6:00 a.m. and 8:00 a.m. from Monday to Friday. Time and one-half (1½) shall be paid for first two (2) hours of overtime Monday through Friday and the first eight (8) hours on Saturday. All other overtime hours Monday through Saturday shall be paid at double (2) time rate. Double (2) time shall be paid for all time on Sunday and recognized holidays or the days observed in lieu of these holidays.

NO. 12: Means the work week shall commence on Monday at 12:01 a.m. and shall continue through the following Friday, inclusive of each week. All work performed by employees anywhere in excess of forty (40) hours in one (1) work week, shall be paid for at the rate of one and one-half (1½) times the regular hourly wage scale. All work performed within the regular working hours which shall consist of a ten (10) hour work day except in emergency situations. Overtime work and Saturday work shall be paid at one and one-half (1½) times the regular hourly rate. Work on recognized holidays and Sundays shall be paid at two (2) times the regular hourly rate.

NO. 18: Means the regular work day shall be eight (8) hours. Working hours are from six (6) hours before Noon (12:00) to six (6) hours after Noon (12:00). The regular work week shall be forty (40) hours, beginning between 6:00 a.m. and 12:00 Noon on Monday and ending between 1:00 p.m. and 6:00 p.m. on Friday. Saturday will be paid at time and one-half (1½). Sunday and Holidays shall be paid at double (2) time. Saturday can be a make-up day if the weather has forced a day off, but only in the week of the day being lost. Any time before six (6) hours before Noon or six (6) hours after Noon will be paid at time and one-half (1½).

NO. 22: Means a regular work week of forty (40) hours will start on Monday and end on Friday. The regular work day shall be either eight (8) or ten (10) hours. If a crew is prevented from working forty (40) hours Monday through Friday, or any part thereof by reason of inclement weather, Saturday or any part thereof may be worked as a make-up day at the straight time rate. Employees who are part of a regular crew on a make-up day, notwithstanding the fact that they may not have been employed the entire week, shall work Saturday at the straight time rate. A workday is to begin between 6:00 a.m. and 9:00 a.m. However, the project starting time may be advanced or delayed if mutually agreed to by the interest parties. For all time worked on recognized holidays, or days observed as such, double (2) time shall be paid.

NO. 26: Means that the regular working day shall consist of eight (8) hours worked between 6:00 a.m., and 5:00 p.m., five (5) days per week, Monday to Friday, inclusive. Hours of work at each jobsite shall be those established by the general contractor and worked by the majority of trades. (The above working hours may be changed by mutual agreement). Work performed on Construction Work on Saturdays, Sundays and before and after the regular working day on Monday to Friday, inclusive, shall be classified as overtime, and paid for at double (2) the rate of single time. The employer may establish hours worked on a jobsite for a four (4) ten (10) hour day work week at straight time pay for construction work; the regular working day shall consist of ten (10) hours worked consecutively, between 6:00 a.m. and 6:00 p.m., four (4) days per week, Monday to Thursday, inclusive. Any work performed on Friday, Saturday, Sunday and holidays, and before and after the regular working day on Monday to Thursday where a four (4) ten (10) hour day workweek has been established, will be paid at two times (2) the single time rate of pay. The rate of pay for all work performed on holidays shall be at two times (2) the single time rate of pay.

REPLACEMENT PAGE
BOONE COUNTY
BUILDING CONSTRUCTION - OVERTIME SCHEDULE

NO. 28: Means a regular workday shall consist of eight (8) hours between 7:00 a.m. and 5:30 p.m., with at least a thirty (30) minute period to be taken for lunch. Five (5) days a week, Monday through Friday inclusive, shall constitute a work week. The Employer has the option for a workday/workweek of four (4) ten (10) hour days (4-10's) provided:

-The project must be for a minimum of four (4) consecutive days.
-Starting time may be within one (1) hour either side of 8:00 a.m.
-Work week must begin on either a Monday or Tuesday: If a holiday falls within that week it shall be a consecutive work day. (Alternate: If a holiday falls in the middle of a week, then the regular eight (8) hour schedule may be implemented).
-Any time worked in excess of any ten (10) hour work day (in a 4-10 hour work week) shall be at the appropriate overtime rate.

All work outside of the regular working hours as provided, Monday through Saturday, shall be paid at one & one-half (1½) times the employee's regular rate of pay. All work performed from 12:00 a.m. Sunday through 8:00 a.m. Monday and recognized holidays shall be paid at double (2) the straight time hourly rate of pay. Should employees work in excess of twelve (12) consecutive hours they shall be paid double time (2X) for all time after twelve (12) hours. Shift work performed between the hours of 4:30 p.m. and 12:30 a.m. (second shift) shall receive eight (8) hours pay at the regular hourly rate of pay plus ten (10%) percent for seven and one-half (7½) hours work. Shift work performed between the hours of 12:30 a.m. and 8:00 a.m. (third shift) shall receive eight (8) hours pay at the regular hourly rate of pay plus fifteen (15%) percent for seven (7) hours work. A lunch period of thirty (30) minutes shall be allowed on each shift. All overtime work required after the completion of a regular shift shall be paid at one and one-half (1½) times the shift hourly rate.

NO. 33: Means the standard work day and week shall be eight (8) consecutive hours of work between the hours of 6:00 a.m. and 6:00 p.m., excluding the lunch period Monday through Friday, or shall conform to the practice on the job site. Four (4) days at ten (10) hours a day may be worked at straight time, Monday through Friday and need not be consecutive. All overtime, except for Sundays and holidays shall be at the rate of time and one-half (1½). Overtime worked on Sundays and holidays shall be at double (2) time.

NO. 40: Means the regular working week shall consist of five (5) consecutive (8) hour days' labor on the job beginning with Monday and ending with Friday of each week. Four (4) 10-hour days may constitute the regular work week. The regular working day shall consist of eight (8) hours labor on the job beginning as early as 6:00 a.m. and ending as late as 5:30 p.m. All full or part time labor performed during such hours shall be recognized as regular working hours and paid for at the regular hourly rate. All hours worked on Saturday and all hours worked in excess of eight (8) hours but not more than twelve (12) hours during the regular working week shall be paid for at time and one-half (1½) the regular hourly rate. All hours worked on Sundays and holidays and all hours worked in excess of twelve (12) hours during the regular working day shall be paid at two (2) times the regular hourly rate. In the event of rain, snow, cold or excessively windy weather on a regular working day, Saturday may be designated as a "make-up" day. Saturday may also be designated as a "make-up" day, for an employee who has missed a day of work for personal or other reasons. Pay for "make-up" days shall be at regular rates.

REPLACEMENT PAGE
BOONE COUNTY
BUILDING CONSTRUCTION - OVERTIME SCHEDULE

NO. 42: Means eight (8) hours between the hours of 8:00 a.m. and 4:30 p.m. shall constitute a work day. The starting time may be advanced one (1) or two (2) hours. Employees shall have a lunch period of thirty (30) minutes. The Employer may provide a lunch period of one (1) hour, and in that event, the workday shall commence at 8:00 a.m. and end at 5:00 p.m. The workweek shall commence at 8:00 a.m. on Monday and shall end at 4:30 p.m. on Friday (or 5:00 p.m. on Friday if the Employer grants a lunch period of one (1) hour), or as adjusted by starting time change as stated above. All work performed before 8:00 a.m. and after 4:30 p.m. (or 5:00 p.m. where one (1) hour lunch is granted for lunch) or as adjusted by starting time change as stated above or on Saturday, except as herein provided, shall be compensated at one and one-half (1½) times the regular hourly rate of pay for the work performed. All work performed on Sunday and on recognized holidays shall be compensated at double (2) the regular hourly rate of pay for the work performed. When working a five 8-hour day schedule and an Employer is prevented from working forty (40) hours, Monday through Friday, or any part thereof by reason of inclement weather (rain or mud), Saturday or any part thereof may be worked as a make-up day at the straight time rate. The Employer shall have the option of working five eight (8) hour days or four ten (10) hour days Monday through Friday. If an Employer elects to work five (5) eight (8) hour days during any work week, hours worked more than eight (8) per day or forty (40) hours per week shall be paid at time and one-half (1½) the hourly rate Monday through Friday. If an Employer elects to work four (4) ten (10) hour days in any week, work performed more than ten (10) hours per day or forty (40) hours per week shall be paid at time and one-half (1½) the hourly rate Monday through Friday. If an Employer is working ten (10) hour days and loses a day due to inclement weather, they may work ten (10) hours Friday at straight time. All hours worked over the forty (40) hours Monday through Friday will be paid at time and one-half (1½) overtime rate. Overtime shall be computed at half-hour intervals. Shift Work: Two (2) or three (3) shifts shall be permitted, provided such shifts are scheduled for a minimum of three (3) consecutive days. The second shift shall begin at 4:30 p.m. and end at 12:30 a.m. with one-half (1/2) hour for lunch between 7:30 p.m. and 9:00 p.m. and shall received eighty (8) hours' pay. The third shift shall begin at 12:30 a.m. and end at 8:00 a.m. with one-half (1/2) hour for lunch between 3:30 a.m. and 5:00 a.m. and shall received (8) hour's; pay. There shall be at least one (1) foreman on each shift on jobs where more than one shift is employed, provided that there are two (2) or more employees on second and on the third shifts. All shifts shall arrange to interchange working hours at the end of each week. When three shifts are used, the applicable rate must be paid from Saturday at 8:00 a.m. until the following Monday at 8:00 a.m. When three shifts are employed, the second and third shifts shall contain at least one-half (1/2) as many employees as the first shift.

NO. 43: Eight (8) hours shall constitute a work day between the hours of 7:00 a.m. and 4:30 p.m. Forty (40) hours within five (5) days, Monday through Friday inclusive, shall constitute the work week. Work performed in the 9th and 10th hour, Monday through Friday, shall be paid at time and one-half (1½) the regular straight time rate of pay. Contractor has the option to pay two (2) hours per day at the time and one-half (1½) the regular straight time rate of pay between the hours of 6:00 a.m. and 5:30 p.m., Monday through Friday. Work performed outside the regularly scheduled working hours and on Saturdays, Sundays and recognized legal holidays, or days celebrated as such, shall be paid for at the rate of double (2) time.

NO. 55: Means the regular work day shall be eight (8) hours between 6:00 a.m. and 4:30 p.m. The first two (2) hours of work performed in excess of the eight (8) hour work day, Monday through Friday, and the first ten (10) hours of work on Saturday, shall be paid at one & one-half (1½) times the straight time rate. All work performed on Sunday, observed holidays and in excess of ten (10) hours a day, Monday through Saturday, shall be paid at double (2) the straight time rate.

REPLACEMENT PAGE
BOONE COUNTY
BUILDING CONSTRUCTION - OVERTIME SCHEDULE

NO. 57: Means eight (8) hours per day shall constitute a day's work and forty (40) hours per week, Monday through Friday, shall constitute a week's work. The regular starting time shall be 8:00 a.m. If a second or third shift is used, the regular starting time of the second shift shall be 4:30 p.m. and the regular starting period for the third shift shall be 12:30 a.m. These times may be adjusted by the employer. The day shift shall work a regular eight (8) hours shift as outlined above. Employees working a second shift shall receive an additional $0.25 above the regular hourly rate and perform seven and one-half (7½) hours work for eight (8) hours pay. Third shift employees shall be paid an additional $0.50 above the regular hourly rate and work seven (7) hours for eight (8) hours pay. When circumstances warrant, the Employer may change the regular workweek to four (4) ten-hour days at the regular time rate of pay. All time worked before and after the established workday of eight (8) hours, Monday through Friday, and all time worked on Saturday shall be paid at the rate of time and one-half (1½) except in cases where work is part of an employee's regular Friday shift. All time worked on Sunday and recognized holidays shall be paid at the double (2) time rate of pay except in cases where work is part of an employee's previous day's shift. For all overtime hours worked $27.04 of the fringe benefits portion of the prevailing wage shall be paid at the same overtime rate at which the cash portion of the prevailing wage is to be paid. The remaining $1.29 of the fringe benefit portion of the prevailing wage may be paid at straight time.

NO. 59: Means that except as herein provided, eight (8) hours a day shall constitute a standard work day, and forty (40) hours per week shall constitute a week's work. All time worked outside of the standard eight (8) hour work day and on Saturday shall be classified as overtime and paid the rate of time and one-half (1½). All time worked on Sunday and holidays shall be classified as overtime and paid at the rate of double (2) time. The Employer has the option of working either five (5) eight hour days or four (4) ten hour days to constitute a normal forty (40) hour work week. When the four (4) ten-hour work week is in effect, the standard work day shall be consecutive ten (10) hour periods between the hours of 6:30 a.m. and 6:30 p.m. Forty (40) hours per week shall constitute a week's work, Monday through Thursday, inclusive. In the event the job is down for any reason beyond the Employer's control, then Friday and/or Saturday may, at the option of the Employer, be worked as a make-up day; straight time not to exceed ten (10) hours or forty (40) hours per week. When the five day eight (8) hour work week is in effect, forty (40) hours per week shall constitute a week's work, Monday through Friday, inclusive. In the event the job is down for any reason beyond the Employer's control, then Saturday may, at the option of the Employer, be worked as a make-up day; straight time not to exceed eight (8) hours or forty (40) hours per week. The regular starting time (and resulting quitting time) may be moved to 6:00 a.m. or delayed to 9:00 a.m. Make-up days shall not be utilized for days lost due to holidays.

NO. 60: Means the Employer shall have the option of working five 8-hour days or four 10-hour days Monday through Friday. If an Employer elects to work five 8-hour days during any work week, hours worked more than eight (8) per day or forty (40) per week shall be paid at time and one-half (1½) the hourly wage rate plus fringe benefits Monday through Friday. SATURDAY MAKE-UP DAY: If an Employer is prevented from working forty (40) hours, Monday through Friday, or any part thereof by reason of inclement weather (rain or mud), Saturday or any part thereof may be worked as a make-up day at the straight time rate. It is agreed by the parties that the make-up day is not to be used to make up time lost due to recognized holidays. If an Employer elects to work four 10-hour days, between the hours of 6:30 a.m. and 6:30 p.m. in any week, work performed more than ten (10) hours per day or forty (40) hours per week shall be paid at time and one half (1½) the hourly wage rate plus fringe benefits Monday through Friday. If an Employer is working 10-hour days and loses a day due to inclement weather, the Employer may work ten (10) hours on Friday at straight time. All hours worked over the forty (40) hours Monday through Friday will be paid at time and one-half (1½) the hourly wage rate plus fringe benefits. All Millwright work performed in excess of the regular work day and on Saturday shall be compensated for at time and one-half (1½) the regular Millwright hourly wage rate plus fringe benefits. The regular work day starting at 8:00 a.m. (and resulting quitting time of 4:30 p.m.) may be moved forward to 6:00 a.m. or delayed one (1) hour to 9:00 a.m. All work accomplished on Sundays and recognized holidays, or days observed as recognized holidays, shall be compensated for at double (2) the regular hourly rate of wages plus fringe benefits. NOTE: All overtime is computed on the hourly wage rate plus an amount equal to the fringe benefits.

REPLACEMENT PAGE
BOONE COUNTY
BUILDING CONSTRUCTION - OVERTIME SCHEDULE

NO. 86: The regular workday shall consist of eight (8) consecutive hours, exclusive of a thirty (30) minute lunch period, with pay at the straight time rate with all hours in excess of eight (8) hours in any one day to be paid at the applicable overtime rate at time and one-half (1½). The regular workday shall begin between the hours of 6:00 a.m. and 8:00 a.m. The Employer may have the option to schedule the work week from Monday through Thursday at ten (10) hours per day at the straight time rate of pay with all hours in excess of ten (10) hours in any one day to be paid at the applicable overtime rate at time and one-half (1½). If the Employer elects to work from Monday through Thursday and is stopped due to inclement weather, holiday or other conditions beyond the control of the Employer, they shall have the option to work Friday at the straight time rate of pay to complete the forty (40) hours for the workweek. All overtime work performed on Monday through Saturday shall be paid at time and one-half (1½) the hourly rate. Fringe benefits shall be paid at the one and one half the hourly rate. All work performed on Sundays and recognized holidays shall be paid at double (2) the hourly rate. Fringe benefits shall be paid at double the hourly rate. Shifts may be established when considered necessary by the Employer. Shift hours and rates will be as follows. If shifts are established, work on the First Shift will begin between 6:00 a.m. and 9:00 a.m. and consist of eight (8) hours of work plus one-half hour unpaid lunch. Hours worked during the first shift will be paid at the straight time rate of pay. The second shift shall start eight hours after the start of the first shift and consist of eight (8) hours of work plus one-half hour unpaid lunch. Work on the second shift will begin between 2:00 p.m. and 5:00 p.m. and be paid the straight time rate plus $2.50 per hour. The third shift shall start eight hours after the start of the second shift and consist of eight (8) hours plus one-half hour unpaid lunch. Work on the third shift will begin between 10:00 p.m. and 1:00 a.m. and be paid the straight time rate plus $3.50 per hour. The additional amounts that are to be paid are only applicable when working shifts. Shifts that begin on Saturday morning through those shifts which end on Sunday morning will be paid at time and one-half these rates. Shifts that begin on Sunday morning through those shifts which end on Monday morning will be paid at double time these rates.

NO. 91: Means eight (8) hours shall constitute a day's work commencing at 7:00 a.m. and ending at 3:30 p.m., allowing one-half (½) hour for lunch. The option exists for the Employer to use a flexible starting time between the hours of 6:00 a.m. and 9:00 a.m. The regular workweek shall consist of forty (40) hours of five (5) workdays, Monday through Friday. The workweek may consist of four (4) ten (10) hour days from Monday through Thursday, with Friday as a make-up day. If the make-up day is a holiday, the employee shall be paid at the double (2) time rate. The employees shall be paid time and one-half (1½) for work performed on Saturdays, before the regular starting time or after the regular quitting time or over eight (8) hours per work day (unless working a 10-hour work day, then time and one-half (1½) is paid for work performed over ten (10) hours a day) or over forty (40) hours per work week. Work performed on Sundays and recognized holidays shall be paid at the double (2) time rate of pay. SHIFT WORK: When it is necessary for the project to operate in shifts, there will be three (3) eight (8) hour shifts commencing at 8:00 a.m. Shift work must continue for a period of not less than three (3) consecutive work days, two (2) days which must be regular work days (Monday through Friday). In the event the second or third shift of any regular work day shall fall into a Saturday or a holiday, such extension into a Saturday or holiday shall be considered as part of the previous workday and employees shall be paid at the regular shift rate. The first day shift shall work a regular eight (8) hour day at regular rates. The second shift shall be eight (8) hours regular time pay plus $2.50 per hour premium for eight (8) hours work. Third shift will be for eight (8) hours regular time pay plus $3.00 per hour premium for eight (8) hours work.

NO. 94: Means eight (8) hours shall constitute a day's work between the hours of 8:00 a.m. and 5:00 p.m. The regular workday starting time of 8:00 a.m. (and resulting quitting time of 4:30 p.m.) may be moved forward to 6:00 a.m. or delayed one (1) hour to 9:00 a.m. All work performed in excess of the regular work day and on Saturday shall be compensated at one and one-half (1½) times the regular pay. In the event time is lost during the work week due to weather conditions, the Employer may schedule work on the following Saturday at straight time. All work accomplished on Sunday and holidays shall be compensated at double the regular rate of wages.

REPLACEMENT PAGE
BOONE COUNTY
BUILDING CONSTRUCTION - OVERTIME SCHEDULE

NO. 101: Means that except as provided below, eight (8) hours a day shall constitute a standard work day, and forty (40) hours per week shall constitute a week's work, which shall begin on Monday and end on Friday. All time worked outside of the standard work day and on Saturday shall be classified as overtime and paid the rate of time and one-half (1½) (except as herein provided). All time worked on Sunday and recognized holidays shall be classified as overtime and paid at the rate of double (2) time. The regular starting time of 8:00 a.m. (and resulting quitting time of 4:30 p.m.) may be moved forward to 6:00 a.m. or delayed one (1) hour to 9:00 a.m. The Employer has the option of working either five (5) eight-hour days or four (4) ten-hour days to constitute a normal forty (40) hour work week. When a four (4) ten-hour day work week is in effect, the standard work day shall be consecutive ten (10) hour periods between the hours of 6:30 a.m. and 6:30 p.m. Forty (40) hours per week shall constitute a week's work Monday through Thursday, inclusive. In the event the job is down for any reason beyond the Employer's control, then Friday and/or Saturday may, at the option of the Employer, be worked as a make-up day; straight time not to exceed ten (10) hours per day or forty (40) hours per week. Starting time will be designated by the employer. When the five (5) day eight (8) hour work week is in effect, forty (40) hours per week shall constitute a week's work, Monday through Friday, inclusive. In the event the job is down for any reason beyond the Employer's control, then Saturday may, at the option of the Employer, be worked as a make-up day; straight time not to exceed eight (8) hours per day or forty (40) hours per week. Make-up days shall not be utilized for days lost due to holidays.

NO. 122: Means the regular workday shall be (8) hours. The regular work week shall be forty (40) hours, beginning 6:00 a.m. on Monday and ending 6:00 p.m. on Friday. Saturday will be time and one-half (1½). Sunday and Holidays shall be double (2) time. Saturday can be a make-up day if weather has forced a day off.

NO. 124: Means eight (8) hours shall constitute a day's work on all classes of work between the hours of 6:00 a.m. and 5:30 p.m., Monday through Friday. The pay for time worked during these hours shall be at the regular wage rate. The regular workweek shall be Monday through Friday. Employment from 4:30 p.m. to 12:00 midnight, Monday through Friday, shall be paid for at one and one-half (1½) times the regular hourly rate. From 12:00 midnight until 8:00 a.m. on any day shall be paid for at twice the regular hourly rate. All time worked on Sundays and the recognized holidays shall be paid at the rate of double (2) time. It is understood that forty (40) hours shall constitute a regular workweek, (5-8's) Sunday Midnight through Friday Midnight, understanding anything over eight (8) hours is one and one-half (1½) times the hourly wage rate.

BOONE COUNTY
HOLIDAY SCHEDULE – BUILDING CONSTRUCTION

NO. 3: All work done on New Year's Day, Decoration Day, July 4th, Labor Day, Veteran's Day, Thanksgiving and Christmas shall be compensated at the double (2) time rate of pay. When any of these holidays fall on a Sunday, the following Monday shall be observed.

NO. 4: All work done on New Year's Day, Memorial Day, Independence Day, Labor Day, Thanksgiving and Christmas Day shall be paid at the double time rate of pay. If any of the above holidays fall on Sunday, Monday will be observed as the recognized holiday. If any of the above holidays fall on Saturday, Friday will be observed as the recognized holiday and holidays falling on Sunday will be observed on the following Monday.

NO. 5: All work that shall be done on New Year's Day, Memorial Day, Independence Day, Labor Day, Veteran's Day, Thanksgiving Day, and Christmas Day shall be paid twice the amount of his or her regular hourly wage rate for each hour of fraction thereof worked on any such day .

NO. 7: The following days are assigned days and are recognized as holidays: New Year's Day, Memorial Day, Independence Day, Labor Day, Veteran's Day, Thanksgiving Day, and Christmas Day. If a holiday falls on a Sunday, it shall be observed on the following Monday. If a holiday falls on a Saturday, it shall be observed on the preceding Friday. No work shall be performed on Labor Day except in case of jeopardy to work under construction. This is applied to protect Labor Day. When a holiday falls during the normal workweek, Monday through Friday, it shall be counted as eight (8) hours toward the forty (40) hour week. However, no reimbursement for these eight (8) hours is to be paid to the workman unless worked. If workman are required to work the above enumerated holidays or days observed as such, or on Sunday, they shall receive double (2) the regular rate of pay for such work.

NO. 8: All work performed on New Year's Day, Memorial Day, Independence Day, Labor Day, Veteran's Day, Thanksgiving Day, and Christmas Day, or the days observed in lieu of these holidays, shall be paid at the double time rate of pay.

NO. 15: All work accomplished on the recognized holidays of New Year's Day, Decoration Day (Memorial Day), Independence Day (Fourth of July), Labor Day, Veteran's Day, Thanksgiving Day and Christmas Day, or days observed as these named holidays, shall be compensated for at double (2) the regular hourly rate of wages plus fringe benefits. If a holiday falls on Saturday, it shall be observed on the preceding Friday. If a holiday falls on a Sunday, it shall be observed on the following Monday. No work shall be performed on Labor Day, Christmas Day, Decoration Day or Independence Day except to preserve life or property.

NO. 19: All work done on New Year's Day, Memorial Day, July 4th, Labor Day, Thanksgiving Day, and Christmas Day shall be paid at the double time rate of pay. The employee may take off Friday following Thanksgiving Day. However, the employee shall notify his or her Foreman, General Foreman or Superintendent on the Wednesday preceding Thanksgiving Day. When one of the above holidays falls on Sunday, the following Monday shall be considered a holiday and all work performed on either day shall be at the double (2) time rate. When one of the holidays falls on Saturday, the preceding Friday shall be considered a holiday and all work performed on either day shall be at the double (2) time rate.

NO. 23: All work done on New Year's Day, Memorial Day, Independence Day, Labor Day, Veteran's Day, Thanksgiving Day, Christmas Day and Sundays shall be recognized holidays and shall be paid at the double time rate of pay. When a holiday falls on Sunday, the following Monday shall be considered a holiday. When a holiday falls on Saturday, Friday is recognized as a holiday.

NO. 44: All work done on New Year's Day, Decoration Day, Independence Day, Labor Day, Veteran's Day, Thanksgiving Day, and Christmas Day shall be paid at the double time rate of pay. If a holiday falls on a Sunday, it shall be observed on the Monday following. If a holiday falls on a Saturday, it shall be observed on the proceeding Friday. No work shall be performed on these days except in emergency to protect life or property. All work performed on these holidays shall be compensated at double the regular hourly rate for the work performed. Overtime shall be computed at half-hour intervals.

NO. 45: All work performed on New Year's Day, Memorial Day, Independence Day, Labor Day, Veteran's Day, Thanksgiving Day, the day after Thanksgiving, the day before Christmas, and Christmas Day, shall be paid at the double time rate of pay.

BOONE COUNTY
HOLIDAY SCHEDULE – BUILDING CONSTRUCTION

NO. 54: All work performed on New Year's Day, Memorial Day, Independence Day, Labor Day, Veteran's Day, Thanksgiving Day, the Friday after Thanksgiving Day, and Christmas Day shall be paid at the double (2) time rate of pay. When a holiday falls on Saturday, it shall be observed on Friday. When a holiday falls on Sunday, it shall be observed on Monday.

NO. 55: The following days are recognized as holidays: New Year's Day, Memorial Day, Independence Day, Labor Day, Thanksgiving Day and Christmas Day. If a holiday falls on a Sunday, it shall be observed on the following Monday. No work shall be performed on Labor Day except in case of jeopardy to work under construction. This rule is applied to protect Labor Day. When a holiday falls during the normal work week, Monday through Friday, it shall be counted as eight (8) hours toward the forty (40) hour week; however, no reimbursement for this eight (8) hours is to be paid the workmen unless worked. An Employer working a four (4) day, ten (10) hour schedule may use Friday as a make up day when an observed holiday occurs during the work week. Employees have the option to work that make up day. If workmen are required to work the above enumerated holidays, or days observed as such, they shall receive double (2) the regular rate of pay for such work.

NO. 60: All work performed on New Year's Day, Armistice Day (Veteran's Day), Decoration Day (Memorial Day), Independence Day (Fourth of July), Thanksgiving Day and Christmas Day shall be paid at the double time rate of pay. No work shall be performed on Labor Day except when triple (3) time is paid. When a holiday falls on Saturday, Friday will be observed as the holiday. When a holiday falls on Sunday, the following Monday shall be observed as the holiday.

NO. 66: All work performed on Sundays and the following recognized holidays, or the days observed as such, of New Year's Day, Decoration Day, Fourth of July, Labor Day, Veteran's Day, Thanksgiving Day and Christmas Day, shall be paid at double (2) the hourly rate plus an amount equal to the hourly Total Indicated Fringe Benefits. Whenever any such holidays fall on a Sunday, the following Monday shall be observed as a holiday.

NO. 69: All work performed on New Year's Day, Memorial Day, July Fourth, Labor Day, Veteran's Day, Thanksgiving Day or Christmas Day shall be compensated at double (2) their straight-time hourly rate of pay. Friday after Thanksgiving and the day before Christmas are also holidays, however, if the employer chooses to work the normal work hours on these days, the employee will be paid at straight -time rate of pay. If a holiday falls on a Saturday, the holiday will be observed on Saturday; if a holiday falls on a Sunday, the holiday will be observed on the following Monday.

NO. 74: All work performed on New Year's Day, Memorial Day, Fourth of July, Labor Day, Veteran's Day, Thanksgiving Day and Christmas Day, shall be paid at double (2) time of the hourly rate of pay. In the event one of the above holiday's falls on Saturday, the holiday shall be celebrated on Saturday. If the holiday falls on Sunday, the holiday will be celebrated on Monday.

NO. 76: The following days are recognized as holidays: New Years Day, Memorial Day, Independence Day, Labor Day, Veterans Day, Thanksgiving Day, and Christmas. No work of any pretense shall be performed on Charismas Day or Independence Day. Any work performed on the other holidays shall be paid for at least two (2) times the regular rate of pay. If a holiday falls on a Sunday, the following Monday will be observed. If a holiday falls on a Saturday, the preceding Friday will be observed.

OCCUPATIONAL TITLE	* Date of Increase	Basic Hourly Rates	Over-Time Schedule	Holiday Schedule	Total Fringe Benefits
Carpenter	6/16	$30.83	23	16	$16.10
Electrician (Outside-Line Construction\Lineman)		$42.27	9	12	$5.25 + 36%
Lineman Operator		$36.45	9	12	$5.25 + 36%
Lineman - Tree Trimmer		$24.15	32	31	$9.98 + 3%
Groundman		$28.13	9	12	$5.25 + 36%
Groundman - Tree Trimmer		$17.84	32	31	$7.50 + 3%
Laborer					
General Laborer	6/16	$27.96	2	4	$13.17
Skilled Laborer	6/16	$27.96	2	4	$13.17
Millwright	6/16	$30.83	23	16	$16.10
Operating Engineer					
Group I	6/16	$27.94	21	5	$24.87
Group II	6/16	$27.59	21	5	$24.87
Group III	6/16	$27.39	21	5	$24.87
Group IV	6/16	$23.74	21	5	$24.87
Oiler-Driver	6/16	$23.74	21	5	$24.87
Pile Driver	6/16	$30.83	23	16	$16.10
Traffic Control Service Driver		$26.415	28	27	$9.045
Truck Driver-Teamster					
Group I	6/16	$29.27	25	21	$12.45
Group II	6/16	$29.43	25	21	$12.45
Group III	6/16	$29.42	25	21	$12.45
Group IV	6/16	$29.54	25	21	$12.45

Use Heavy Construction Rates on Highway and Heavy construction in accordance with the classifications of construction work established in 8 CSR 30-3.040(3).

Use Building Construction Rates on Building construction in accordance with the classifications of construction work established in 8 CSR 30-3.040(2).

If a worker is performing work on a heavy construction project within an occupational title that is not listed on the Heavy Construction Rate Sheet, use the rate for that occupational title as shown on the Building Construction Rate sheet.

REPLACEMENT PAGE
BOONE COUNTY
OVERTIME SCHEDULE - HEAVY CONSTRUCTION

FED: Minimum requirement per Fair Labor Standards Act means time and one-half (1 ½) shall be paid for all work in excess of forty (40) hours per work week.

NO. 2: Means a regular workweek shall be forty (40) hours and will start on Monday and end on Friday. The Employer shall have the option of working five 8-hour days or four 10-hour days Monday through Friday. If an Employer elects to work five 8-hour days during any workweek, hours worked more than eight (8) per day or 40 per week shall be paid at time and one-half the hourly rate Monday through Friday. If an Employer elects to work four 10-hour days in a week, work performed more than ten (10) hours per day or 40 hours per week shall be paid at time and one-half the hourly rate Monday through Friday. When working a five 8-hour day schedule and an Employer is prevented from working forty (40) hours Monday through Friday, or any part thereof, by reason of inclement weather, Saturday or any part thereof may be worked as a make-up day at the straight time rate. If an Employer is working a four 10-hour day schedule and loses a day due to inclement weather, he may work 10 hours Friday at straight time. All hours worked over the 40 hours Monday through Friday will be paid at 1 ½ overtime rate. A workday shift is to begin at the option of the Employer, between 6:00 a.m. and not later than 9:00 a.m. However, the project starting time may be advanced or delayed if required. If workmen are required to work the enumerated holidays or days observed as such or Sundays, they shall receive double (2) the regular rate of pay for such work. Overtime shall be computed at one-half (1/2) hour intervals. Shift: The Contractor may elect to work one, two or three shifts on any work. When operating on more than one shift, the shifts shall be known as the day shift, swing shift, and graveyard shift as such terms are recognized in the industry. When two shifts are worked on any operation, the shifts will consist of eight (8) or ten (10) hours exclusive of lunchtime. When three shifts are worked the first day or day shift will consist of eight (8) hours exclusive of lunchtime. The second or swing shift shall consist of seven and one-half (7 1/2) hours work for eight hours pay, exclusive of lunchtime, and the third or the graveyard shift shall consist of seven (7) hours work for eight (8) hours pay, exclusive of the lunchtime. All time in excess of normal shifts shall be considered overtime. Multiple shift (the two or three shift) operation will not be construed on the entire project if at anytime it is deemed advisable and necessary for the Employer to multiple shift a specific operation. However, no shift shall be started between midnight and six a.m. except the graveyard shift on a three-shift operation, or except in an unusual or emergency situation. If an Employer starts a shift between midnight and 6 a.m. except the graveyard shift on a three-shift operation, he shall reimburse all employees for the entire shift at the double time rate. Completion of the second shift on a two-shift operation or completion of the graveyard shift on a three-shift operation that carries over into Saturday morning, shall be at the straight time rate. Overtime shall be computed at ½ hour intervals.

NO. 9: Eight (8) hours shall constitute a work day between the hours of 7:00 a.m. and 4:30 p.m. Forty (40) hours within five (5) days, Monday through Friday inclusive, shall constitute the work week. Work performed in the 9th and 10th hour, Monday through Friday, shall be paid at time and one-half (1½) the regular straight time rate of pay. Contractor has the option to pay two (2) hours per day at the time and one-half (1½) the regular straight time rate of pay between the hours of 6:00 a.m. and 5:30 p.m., Monday through Friday. Worked performed in the first eight (8) hours on Saturday shall be paid at the rate of one and eight tenths (1.8) the regular straight time rate. Work performed outside these hours and on Sundays and recognized legal holidays, or days celebrated as such, shall be paid for at the rate of double (2) time.

NO. 21: Means the regular workday for which employees shall be compensated at straight time hourly rate of pay shall, unless otherwise provided for, begin at 8:00 a.m. and end at 4:30 p.m. However, the project starting time may be advanced or delayed at the discretion of the Employer. At the discretion of the Employer, when working a five (5) day eight (8) hour schedule, Saturday may be used for a make-up day. If an Employer is prohibited from working on a holiday, that employer may work the following Saturday at the straight time rate. However, the Employer may have the option to schedule his work from Monday through Thursday at ten (10) hours per day at the straight time rate of pay with all hours in excess of ten (10) hours in any one day to be paid at the applicable overtime rate. If the Employer elects to work from Monday through Thursday and is stopped due to circumstances beyond his control, he shall have the option to work Friday or Saturday at the straight time rate of pay to complete his forty (40) hours. If an Employer is prohibited from working on a holiday, that Employer may work the following Friday or Saturday at the straight time rate. Overtime will be at one and one-half (1½) times the regular rate. If workmen are required to work the enumerated holidays or days observed as such, or Sundays, they shall receive double (2) the regular rate of pay for such work.

REPLACEMENT PAGE
BOONE COUNTY
OVERTIME SCHEDULE - HEAVY CONSTRUCTION

NO. 23: Means the regular workweek shall start on Monday and end on Friday, except where the Employer elects to work Monday through Thursday, (10) hours per day. All work over ten (10) hours in a day or forty (40) hours in a week shall be at the overtime rate of one and one-half (1½) times the regular hourly rate. The regular workday shall be either eight (8) or ten (10) hours. If a job can't work forty (40) hours Monday through Friday because of inclement weather or other conditions beyond the control of the Employer, Friday or Saturday may be worked as a make-up day at straight time (if working 4-10's). Saturday may be worked as a make-up day at straight time (if working 5-8's). An Employer, who is working a four (4) ten (10) hour day work schedule may use Friday as a make-up day when a workday is lost due to a holiday. A workday is to begin at the option of the Employer but not later than 11:00 a.m. except when inclement weather, requirements of the owner or other conditions beyond the reasonable control of the Employer prevent work. Except as worked as a make-up day, time on Saturday shall be worked at one and one-half (1½) times the regular rate. Work performed on Sunday shall be paid at two (2) times the regular rate. Work performed on recognized holidays or days observed as such, shall also be paid at the double (2) time rate of pay. For all overtime hours worked during the week or on Saturday $15.55 of the fringe benefits portion of the prevailing wage shall be paid at time and one-half (1½). For all overtime hours worked on Sundays or recognized holidays $15.55 of the fringe benefits portion of the prevailing wage shall be paid double time. The remaining $.55 of the fringe benefit portion of the prevailing wage shall be paid at straight time.

NO. 25: Means a regular work week of forty (40) hours, starting on Monday and ending on Friday. The regular work day shall be either eight (8) or ten (10) hours. If a crew is prevented from working forty (40) hours Monday through Friday, or any part thereof by reason of inclement weather, Saturday or any part thereof maybe worked as a make-up day at the straight time rate. Employees who are part of a regular crew on a make-up day, notwithstanding the fact that they may not have been employed the entire week, shall work Saturday at the straight time rate. A work day is to begin between 6:00 a.m. and 9:00 a.m. However, the project starting time maybe advanced or delayed if mutually agreed to by the interest parties. All hours worked on recognized holidays, or days observed as such, double (2) time shall be paid.

NO. 28: Means a regular work week of forty (40) hours will start on Monday and end on Friday. The regular work day shall be either eight (8) or ten (10) hours. If a crew is prevented from working forty (40) hours Monday through Friday, or any part thereof by reason of inclement weather, Saturday or any part thereof may be worked as a make-up day at the straight time rate. Employees who are part of a regular crew on a make-up day, notwithstanding the fact that they may not have been employed the entire week, shall work Saturday at the straight time rate. A workday is to begin between 6:00 a.m. and 9:00 a.m. However, the project starting time may be advanced or delayed if mutually agreed to by the interest parties. For all time worked on recognized holidays, or days observed as such, double (2) time shall be paid.

NO. 32: Means the overtime rate shall be time and one-half the regular rate for work over forty (40) hours per week. Sundays and Holidays shall be paid at double the straight time rate.

BOONE COUNTY
HOLIDAY SCHEDULE – HEAVY CONSTRUCTION

NO. 4: All work performed on New Year's Day, Memorial Day, Independence Day, Labor Day, Thanksgiving Day, Christmas Day, or observed as such, shall be paid at the double time rate of pay. When a Holiday falls on a Sunday, Monday shall be observed. No work shall be performed on Labor Day, except in case of jeopardy to life or property. This is applied to protect Labor Day.

NO. 5: The following days are recognized as holidays: New Year's Day, Memorial Day, Fourth of July, Labor Day, Thanksgiving Day and Christmas Day. If a holiday falls on a Sunday, it shall be observed on the following Monday. If a holiday falls on a Saturday, it shall be observed on the preceding Friday. No work shall be performed on Labor Day except in case of jeopardy to work under construction. This rule is applied to protect Labor Day. When a holiday falls during the normal work week, Monday through Friday, it shall be counted as eight (8) hours toward a forty (40) hour week; however, no reimbursement for this eight (8) hours is to be paid the workman unless worked. If workmen are required to work the above recognized holidays or days observed as such, or Sundays, they shall receive double (2) the regular rate of pay for such work. The above shall apply to the four 10's Monday through Friday work week. The ten (10) hours shall be applied to the forty (40) hour work week.

NO. 12: All work performed on New Year's Day, Memorial Day, Fourth of July, Labor Day, Veteran's Day, Thanksgiving Day, Christmas Day, or days celebrated as such, shall be paid at the double time rate of pay. When one of the foregoing holidays falls on Sunday, it shall be celebrated on the following Monday. When one of the foregoing holidays falls on Saturday, it shall be celebrated on the Friday before the holiday.

NO. 16: The following days are recognized as holidays: New Year's Day, Memorial Day, Fourth of July, Labor Day, Thanksgiving Day and Christmas Day. If a holiday falls on Sunday, it shall be observed on the following Monday. If a holiday falls on Saturday, it shall be observed on the preceding Friday. No work shall be performed on Labor Day except in case of jeopardy to work under construction. This rule is applied to protect Labor Day. When a holiday falls during the normal work week, Monday through Friday, it shall be counted as eight (8) hours toward the forty (40) hour week; however, no reimbursement for this eight (8) hours is to be paid to the worker unless worked. If workers are required to work the above recognized holidays or days observed as such, they shall receive double (2) the regular rate of pay for such work.

NO. 21: The following days are recognized as holidays: New Year's Day, Memorial Day, Independence Day, Labor Day, Thanksgiving Day and Christmas Day. If a holiday falls on a Sunday, it shall be observed on the following Monday. No work shall be performed on Labor Day except in case of jeopardy to work under construction. This rule is applied to protect Labor Day. When a holiday falls during the normal work week, Monday through Friday, it shall be counted as eight (8) hours toward the forty (40) hour week; however, no reimbursement for this eight (8) hours is to be paid the workman unless worked. An Employer working a four (4) day, ten (10) hour schedule may use Friday as a make-up day when an observed holiday occurs during the work week. Employees have the option to work that make-up day. If workmen are required to work the above enumerated holidays, or days observed as such, they shall receive double (2) the regular rate of pay for such work.

NO. 27: The following days are recognized as holidays: New Year's Day, Memorial Day, Independence Day, Labor Day, Thanksgiving Day and Christmas Day. If a holiday falls on a Sunday, it shall be observed on the following Monday. No work shall be performed on Labor Day except in case of jeopardy to work under construction. This rule is applied to protect Labor Day. When a holiday falls during the normal work week, Monday through Friday, it shall be counted as eight (8) hours toward the forty (40) hour week; however, no reimbursement for this eight (8) hours is to be paid the workmen unless worked. An Employer working a four (4) day, ten (10) hour schedule may use Friday as a make up day when an observed holiday occurs during the work week. Employees have the option to work that make up day. If workmen are required to work the above enumerated holidays, or days observed as such, they shall receive double (2) the regular rate of pay for such work.

NO. 31: All work performed on New Year's Day, Presidents' Day, Veterans' Day, Good Friday, Decoration Day, Fourth of July, Labor Day, Christmas Eve Day, Christmas Day, Thanksgiving Day and Day after Thanksgiving or days celebrated for the same.

IN WITNESS WHEREOF, the Principal and Surety have hereunto set their hands and seals, and such of them as or corporations have caused their corporate seals to be hereto affixed and these presents to be signed by their proper officers, the day and year set forth herein.

_____

PRINCIPAL

By: _____

(Signature)

Printed Name: _____

Title: _____

Date: _____

I hereby certify that (1) I have authority to execute this document on behalf of Surety; (2) Surety is named in the current list of "Companies Holding Certificates of Authority as Acceptable Reinsuring Companies": as published in Circular 570 (most current revision) by the Financial Management Service, Surety Bond Branch, U.S. Department of the Treasury; and (3) Surety is duly licensed to issue bonds in the State of Missouri and in the jurisdiction in which the Project is located.

_____

SURETY

By: _____

(Signature)

Printed Name: _____

Title: _____

Date: _____

EXHIBIT ~~E~~ D

BID BOND
(Bid Security)

KNOW ALL MEN BY THESE PRESENTS, that we, _____ _____ as PRINCIPAL and _____ _____as SURETY, are held and firmly bound unto the City of Columbia, Missouri, ("City") in the sum of _____ _____ Dollars ($_____) ("Bid Security"), for the payment of which sum well and truly to be made, we hereby jointly and severally bind ourselves, our heirs, executors, successors, and assigns, firmly by these presents.

THE CONDITION OF THIS OBLIGATION IS SUCH, that whereas Principal has submitted a bid dated _____ , 2016, to enter into a contract in writing for the _____ Project;

NOW, THEREFORE,

IF said Bid shall be rejected, or in the alternate,

IF Principal shall not withdraw the bid within the period specified therein after the opening of bids, or, if no period be specified, within ninety (90) days after the bid opening, or in the alternate,

IF said Bid shall be accepted and the Principal shall execute and deliver a contract in the form of contract attached hereto, properly competed with all attachments and requirements pertaining thereto, and shall furnish a bond for the faithful performance of said contract, and for the payment of all persons performing labor or furnishing materials in connection therewith, shall in all other respects perform the agreement created by the acceptance of said Bid within twenty (20) days after such Contract Documents are presented to Principal for signature, or in the alternate,

In the event of the withdrawal of the Bid within the period specified, or the failure to enter into such contract within the time specified, then the Bid Security shall immediately become due and payable and forfeited to the City as liquidated damages. Principal and Surety agree that this is a fair and reasonable approximation of the actual damages incurred by the City for the Principal's failure to honor its bid and that the liquidated damages in this section are not penal in nature but rather the parties' attempt to fairly quantify the actual damages incurred by the City for the Principal's refusal to honor its bid.

The Surety, for value received, hereby stipulates and agrees that the obligations of said Surety and its bond shall be in no way impaired or affected by the extension of the time within which the City may accept such Bid; and said Surety does hereby waive notice of any such extension.

SURETY POWER OF ATTORNEY MUST BE ATTACHED

Exhibit C

STATEMENT OF BIDDER QUALIFICATIONS

Each Bidder for the work included in the specifications and drawings and the Contract Documents shall submit with their bid the data requested in the following schedule of information. This data must be included in and made a part of each bid document and be contained in the sealed envelope. Failure to comply with this instruction may be regarded as justification for rejecting the Contractor's proposal.

1. Name of Bidder: _____

2. Business Address: _____

3. Date Organized: _____ 4. Date Incorporated: _____ Fed Tax ID #_____

4. If NOT INCORPORATED, state type of business (sole proprietor, LLC, other) and provide your Social Security number. Type of Business: _____ Social Security #_____

5. Number of years engaged in contracting business under present firm name: _____

6. If you have done business under a different name, please give that name and location:

_____

7. Percent (%) of work done by own staff: _____%

8. Have you ever failed to complete any work awarded to your company? _____

   If so, where and why? _____

   _____

9. Have you ever defaulted on a contract? _____

   If so, where and why? _____

   _____

10. List three references. State name and telephone number of contact person. Use separate sheet if necessary.

_____

_____

_____

CITY OF COLUMBIA, MISSOURI

FINANCE DEPARTMENT
PURCHASING DIVISION

NOTICE TO BIDDERS
ADDENDUM #1 RFP: 157/2016
Parking Gate Arm

Bidders shall note these changes to the above Request for Proposal and *incorporate these changes in their submittal.* Bidders shall attach a signed acknowledged copy of this addendum to their proposal, if submitting a hard copy (via paper) or agree to the addendum electronically if submitting through the electronic bid system on line.

The following revisions and/or additions shall be referred to as part of the Proposal/Contract Documents.

General Clarifications:

1.) In addition to answers to these questions, the bid has also been extended and will now close at 5:00 p.m. on October 21.

Item #	Question	City Response
1	Can the City provide us with electrical drawing of the sites?	City does not have drawings for every garage but can provide what we do have. Please contact Tanner Morrel, tanner.morrel@como.gov
2	What type of hotel proximity cards are currently being used?	The hotel is currently using Saflok rfid.
3	In reference to the City's current pre-paid parking card, what are the specifications of the card that the system needs to integrate with?	City utilizes a micro-processor card. The card does not have a magstripe.
4	In reference to City's request for 2 ticket scanners in the event of a malfunction, are you requesting dual entry/exit stations at each lane or an additional barcode scanner only?	City is requesting an additional barcode scanner only.
5	In regards to PCI chip/pin compliance, are you requiring chip and pin units at all stations (entry/exit/pay stations) or only at the pay stations and exit stations? Can we bid EMV reader with chip only?	The EMV chip and pin units shall be only at pay stations and exit stations. The EMV reader may be bid as chip only as long as that is specified.

6	In reference to page 5, exit gate, the RFP 3.3 mentions a card only replacement machine but this point mentions exact change. Will cash be accepted at the exit lanes or are they to be card only?	Exit machines shall only accept cards not cash.
7	Pay on foot machines: do they need to accept and give change in coins or bills only?	The pay on foot machines need to accept credit/debit cards, City's microprocessor cards, coins and bills. Pay machines will not dispense change.
8	In reference to RFP 3.3 page 5, Short Street, 5th and Walnut and 6th and Cherry garages, equipment list says "and possibly another gate arm with only a proximity card reader at the exit," do we need to include this additional equipment in our base bid?	Please include as an option to purchase.
9	Clarification: 6th & Cherry Specifications updated to include two (2) entry machines, not one.	

ACKNOWLEDGEMENT OF ADDENDUM #1

The undersigned Respondent hereby certifies that the changes set forth in this Addendum #1 have been incorporated in their proposal and are a part of Request for Proposal No. 157/2016. All other provisions of the proposal documents, except as herein stated, shall remain in force as written.

Firm _____ Date _____

Signed _____

EXHIBIT B

STREET, STORM DRAIN, AND SANITARY SEWER SPECIFICATIONS AND STANDARDS (OCTOBER 2016)

City of Columbia, Missouri
Public Works Department
Columbia Utilities Department
701 East Broadway
Columbia Missouri 65205
573-874-2489

STREET, STORM DRAIN, AND SANITARY SEWER SPECIFICATIONS AND STANDARDS

October 2016

Approved: 9/13/16
David A. Nichols, P.E. **Date**
Public Works Director

Approved: 9/13/16
David A. Sorrell, P.E. **Date**
Columbia Utilities Assistant Director

STREET, STORM DRAIN, AND SANITARY SEWER SPECIFICATIONS AND STANDARDS

TABLE OF CONTENTS

DIVISION I *CONSTRUCTION AND MATERIALS SPECIFICATIONS*

GENERAL REQUIREMENTS

Section		Number of Pages
1	Definitions	1
2	Control of Work	3
3	Control of Materials	2
4	Prosecution and Progress	3

SPECIFICATIONS

Section		Number of Pages
200	Clearing and Grubbing	1
201	Excavation and Embankment for Street and Storm Sewers	14
202	Borrow Excavation	1
203	Seeding and Mulching	6
204	Sodding	2
205	Subgrade	1
206	Dig Out Repair	1
207	Adjustments of Manholes, Catch Basins and Inlets	1
208	Removals	2
209	Daily Clean Up and Final Trimming and Cleaning Up	1
210	Aggregate Base Material	1
211	Penetration Macadam Base	4
212	Aggregate Base	4
213	Landscaping and Tree Protection	6
214	Tree Protection and Removal	1
215	Mobilization	1
216	Construction Staking	2
220	Bituminous Materials	3
221	Aggregate for Asphaltic Concrete	2
222	Asphaltic Concrete Pavement	17
223	Preparation of Base and Application of Primer and Tack Coats	4
225	Bituminous Plant Mix	1
226	Plant Mix Bituminous Stabilized Base	4

Section		Number of Pages
227	Graded Aggregate for Bituminous Mix	1
228	Superior Performing Pavement (Superpave) Materials	9
229	Superior Performing Pavement (Superpave)	30
230	Portland Cement Concrete	2
231	Portland Cement Concrete Pavement	7
232	Concrete Curb and Gutter	2
234	Concrete Sidewalks	3
235	Concrete Steps	2
236	Patching Portland Cement Concrete Pavement	1
237	Concrete Driveway Pavement	1
238	Reinforcement for Portland Cement Concrete	3
239	Repair of Concrete Pavement	2
240	Cold Milling	2
241	Maintenance of Traffic	2
242	Pavement Markings	34
243	Audible Pedestrian Push Buttons	3
244	Colored Imprinted Concrete	2
250	Concrete Structures	6
260	Storm Sewers	11
500	Excavation and Trenching for Sanitary Sewers	16
505	Sanitary Sewer Pipe	5
506	Sewer Lateral Marking	2
510	Sewer Manholes	6
515	Sewer Pipe Installation and Testing	6
530	Grouting	1

DIVISION II *STANDARD DETAILS*

DIVISION I

CONSTRUCTION AND MATERIALS SPECIFICATIONS

GENERAL REQUIREMENTS

SECTION 1

DEFINITIONS

Wherever the following terms are used in the plans, specifications the intent and meaning shall be interpreted as follows:

AASHTO:	The American Association of State Highway and Transportation Officials, Reference-Standard Specifications for Highway Materials and Methods of Sampling and Testing.
ASTM:	The American Society for Testing Materials.
Change Order:	Written authority issued to the Contractor by the Engineer, directing changes in the work within the provisions of the Contract.
Final Acceptance:	A written notice from the Engineer notifying the Contractor that construction has been satisfactorily completed. The written notice will follow the prefinal and final inspection reports and submission of all affidavits and paperwork.
MoDOT:	Missouri Department of Transportation.
Plans:	All drawings or reproductions thereof pertaining to the work and which have been approved by the authorized representative of the City.
Proposal:	The written offer submitted by the Bidder to perform the work specified in the Contract.
Specifications:	The directions, provisions, and requirements contained herein together with such may be added or adopted as supplemental specifications or special provisions, for the performance of the work and for the quantity, quality, and proportion of materials.
Subcontractor:	An individual, partnership, joint venture, or corporation that has contracted with the Contractor for the performance of all or any part of the work or services which such Contractor has itself contracted to perform.
Subgrade:	That portion of the roadbed upon which the surfacing material or pavement is to be placed. Also, the bottom of a trench where pipe bedding material is to be placed.

SECTION 2

CONTROL OF WORK

2.1. Authority of the Engineer. The Engineer shall in all cases decide any and all questions which may arise concerning the quality, quantity, and acceptability of all materials furnished and work performed; the manner of performance and the rate of progress of all work; all question of classification; the correct interpretation of all plans, specifications, and Contract provisions; the acceptable fulfillment of the Contract in all respects; the proper compensation for the performance or breach of the Contract; all claims of any character whatsoever in connection with or growing out of the construction whether claimed under the Contract, under force account, under quantum merit, or otherwise; and his estimates and decisions shall be final, binding, and conclusive upon all parties to the Contract.

2.2. Subcontractors. No subcontract shall, under any circumstances, relieve the Contractor of his liabilities and obligations under his Contract, and all transactions with the Engineer must be through the Contractor. Subcontractors will be recognized only in the capacity of workmen and shall be subject to same requirements as to character and competence. Not less than fifty percent (50%) of the Contract work shall be performed by the Contractor's own forces and equipment.

2.3. Measurement of Quantities. All work completed under the Contract will be measured by the Engineer using United States Standard Measures in accordance with well recognized engineering practice or will be paid for on plan quantity basis as set out elsewhere in these specifications. If the quantity of any item that is to be paid for on a plan quantity basis is found to include errors, the quantity will be corrected before making final payment.

2.4. Interpretation of Proposal Quantities. Although the quantities listed in the proposal forms and on the plans are the results of calculations made from original surveys, such quantities, including the classification thereof, may or may not be representative of the actual conditions encountered during construction. Final payment to the Contractor will be made on only the actual amount of work of each class performed, which amount shall be finally determined from actual measurements made during the progress or after the completion of the work, except as otherwise specified herein.

2.5. The Contractor agrees that he is fully informed regarding all of the conditions affecting the work to be done, and labor and materials to be furnished for the completion of this Contract, and that his information was procured by personal investigation and research and not from any estimates of the City of Columbia; and that it will make no claim against the City by reason of estimates, test, or representation of any officer, agent or employee of the City. The conditions indicated on the plans and in the proposal represent information available from surveys, and studies, but the City assumes no responsibility with respect to the sufficiency and accuracy of such data.

2.6. Inspection of Work. The Contractor shall furnish the Engineer with every reasonable facility for ascertaining whether or not the work performed and materials used

are in accordance with the requirements of the Contract specifications. If the Engineer requests, the Contractor shall, at any time before final acceptance of the work, remove or uncover such portion of the finished work as may be directed. After examination, the Contractor shall restore said portions of the work to the standard required by the specifications. Should the work thus exposed or examined prove acceptable, the uncovering, removing, and replacing or restoring of the parts removed shall be considered and paid for as extra work. Should the work thus exposed or examined prove unacceptable, the uncovering, or removing, and the replacing of the covering or restoring of the parts removed shall be at the Contractor's expense. No work shall be done and no materials shall be used without supervision or inspection by the Engineer or his representative. Any work done or materials used without said supervision or inspection by the Engineer or his representative may at the option of the Engineer be ordered removed and replaced at the Contractor's expense.

In case the federal or state government or any agency thereof is paying all or a portion of the cost of the construction of the project, inspections may be made by the Federal Highway Administration and the Missouri Department of Transportation and the Contractor shall grant them access to all parts of the work.

2.7 Unauthorized Work.

2.7.1. Work done without lines and grades being given or work done beyond the lines and grades shown on the plans or as given, except as otherwise provided in the Contract, will be considered unauthorized and done at the expense of the Contractor.

2.7.2. All changes in the work or departures not provided for in the Contract, will be considered unauthorized and done at the expense of the Contractor, unless, before proceeding with the work, he has a copy of an order signed by the Engineer, or a change order signed by all parties whose signatures are provided for. These forms shall contain complete detailed instructions regarding the proposed changes. Any departure from the instructions contained in such written order shall be considered unauthorized.

2.7.3. The Engineer may order unauthorized work removed and replaced at the Contractor's expense.

2.8. Defective Work. All construction and materials which have been rejected or declared unsatisfactory shall be remedied or removed and replaced in an acceptable manner by the Contractor at his expense. Upon failure of the Contractor to remedy or remove and properly dispose of rejected materials or work, or to replace them immediately after receiving written notice from the Engineer, the Engineer may employ labor to rectify the work, and the cost of rectification shall be deducted from any payment due or which may become due the Contractor.

2.9. Damage to Existing Improvements. The Contractor will be held liable for damages done to pavements, sidewalks, and other improvements caused by his construction operations. The City may either make repairs at the Contractor's expense or require the Contractor to make repairs.

The Contractor shall furnish suitable equipment for the satisfactory prosecution of the work. No equipment will be permitted that would damage any streets or adjacent property.

2.10. Correction Period. If after final payment and prior to the expiration of two years after the date of substantial completion (unless a longer period is set forth in Supplementary Conditions) or such longer period of time as may be prescribed by law or by the terms of any applicable special guarantee required by the Contract documents, any work is found to be defective as a result of workmanship or material defect, Contractor shall promptly, without cost to Owner and in accordance with Owner's written instructions, either correct such defective work or, if it has been rejected by Owner, remove it from the site and replace it with non-defective Work. If Contractor does not promptly comply with the terms of such instructions, Owner may have the defective work corrected or the rejected work removed and replaced, and all direct and indirect costs of such removal and replacement, including compensation for additional professional services, shall be paid by Contractor.

2.11. Preservation of Utilities, Monuments and Artifacts. The Contractor shall be responsible for the preservation of all public and private utility wires, lines, pipes, poles, cables and conduits within the right of way and shall use every precaution necessary to prevent damage or injury thereto. He shall not disturb or damage any land monument or property landmark until an authorized agent has witnessed or otherwise referenced their locations and shall not remove them until directed by the Engineer. He shall be responsible for the preservation of all artifacts, fossils, and other items of archaeological character encountered within the right of way and shall deliver them promptly into the custody of the Engineer.

2.12. Cleanliness of Streets and Construction Site. The Contractor shall clean and keep clean the streets, the work, and public or private property occupied by him, from waste materials or refuse resulting from his operations. Trucks hauling excavated material, cement, sand, stone, or other loose material from or to the site shall be tight so that no spillage will occur on adjacent streets. Should the Contractor be negligent of his duties in maintaining the proper street cleanliness, the city shall take necessary steps to perform such cleaning and shall charge the Contractor for all the costs thereof.

The Contractor shall provide and maintain in a neat and sanitary condition such accommodations for the use of his employees as may be necessary to comply with the minimum standards of the State Division of Health and of the City of Columbia. He shall commit no public or private nuisance.

Water or dust palliative shall be applied if ordered by the Engineer for the alleviation or prevention of dust nuisance caused by the Contractor's operations.

2.13. Maintenance of Right of Way: The Contractor shall maintain the right of way until final acceptance of the work. Maintenance of the right of way shall include snow removal and mowing.

2.14. Use of Explosives. When explosives are used in the prosecution of the work, the Contractor shall use the utmost care to prevent danger to life or property. All explosives shall be stored in a secure and safe manner and in compliance with all existing statutes and ordinances and all places used for such storage shall be clearly marked "DANGEROUS POWDER MAGAZINE." The Contractor shall notify, in writing, the Engineer and all parties affected by the use of explosives in the work to be performed and it further agrees to save the City, its

agents, officers and employees harmless from any claim growing out of the use of such explosives.

SECTION 3

CONTROL OF MATERIALS

3.1. Sources of Supply. Materials shall be obtained from sources of supply which meet the approval of the Engineer. Inspection of materials made at principal sources of supply is solely a matter of convenience to the Contractor and Producer. All materials shall meet the requirements of the specifications before being incorporated into the work. Any defective materials discovered in the process of handling or at any time during the progress of the work, even though previously accepted, will be rejected. If it is found that a source of supply does not furnish a uniform product or if for any reason the product from any source at any time proves to be unsatisfactory, the Contractor will be required to furnish approved material from other sources. The Contractor shall have no claim for any increased cost on account of such requirement.

3.2. Specifications, Samples, and Tests. When a specification of a national standard (ASTM, AASHTO, etc.) is designated, the material may meet either the designated specifications or the latest revision thereof in effect at the time of the award of the Contract. Tests of samples of materials will be made by the Engineer in accordance with the latest methods prescribed by the ASTM or the AASHTO. All tests not covered by the above shall be performed as specified by the Engineer.

3.2.1. When tests are made at the source of production, the producer shall furnish every reasonable facility for the performance of the tests and for the protection of testing equipment and supplies, and shall permit the Engineer to have free access to all parts of the plant to enable adequate inspection and selection of samples. Sources of supply of bituminous material where the Engineer is required to conduct tests shall have adequate testing facilities and satisfactory laboratory equipment, which equipment shall meet the requirements of the standard methods mentioned.

3.3. Storage of Materials. Materials shall be so stored as to ensure preservation of their quality and fitness for the work. The Engineer may direct that they be placed on wooden platforms or other hard, clean surfaces, and not on the ground and he may direct that they be placed under cover when weather conditions endanger the quality of the materials. Materials in storage shall be so arranged as to facilitate inspection. Lawns, grass plots, or private property shall not be used for storage purposes without written permission of the Owner or lessee.

No material or equipment shall be stored where it will interfere with the safe passage of public traffic, and at the end of each day's work and at other times when construction operations are suspended for any reason, the Contractor shall remove all equipment and other obstructions from that portion of the roadway open for use by public traffic. Spillage resulting from hauling operation along or across any public traveled way shall be removed promptly.

All aggregates and surfacing materials having a maximum size greater than one-half (1/2) inch shall be dumped in horizontal layers when placed in storage. Each layer shall not be more than three (3) feet in depth and the aggregates and surfacing materials shall be deposited in such a manner as to prevent segregation of the sizes.

3.4. Defective Materials. All materials not conforming to the requirements of the specifications shall be considered as defective, and all such materials, whether in place or not, shall be rejected and shall be removed immediately from the construction site unless otherwise permitted by the Engineer. No material which has been rejected, and the defects of which have been subsequently corrected or removed, shall be used until written approval has been given by the Engineer.

3.5. Materials to be Furnished by the Contractor. Unless otherwise stated, all materials needed in the work will be furnished by the Contractor. The Contractor will assume full responsibility in ordering materials of the quality specified and required in the specifications. The Contractor shall be responsible for the delivered costs of all materials ordered by him.

3.6. Quality Control Materials Testing. The City will complete the quality control materials testing. The Contractor will be responsible for scheduling the testing with the City's third party testing firm.

SECTION 4

PROSECUTION AND PROGRESS

4.1. Prosecution of Work.

4.1.1. Progress Schedule and Procedure. Immediately after execution of the Contract Agreement, the Contractor shall submit for approval a carefully prepared Progress Schedule and Procedure, showing the proposed dates of starting and completing each of the various sections of the work, methods of handling traffic and other potential problems of the particular project involved. This schedule must meet with the Engineer's approval prior to issuing the written notice from Purchasing notifying the Contractor to proceed with the work for which he has contracted (Notice to Proceed). If in the opinion of the Engineer proper progress is not being maintained, changes shall be made in the Contractor's operation to assure proper progress.

The Contractor shall elect to use an appropriate construction sequence with consideration given to maintaining access to all properties in the construction zone to the maximum extent practicable.

4.1.2. The Contractor is required to commence work within ten (10) days of the date specified in the Notice to Proceed and any work performed by the Contractor prior to the date specified shall be at his own risk.

4.1.3. The Contractor must continuously and diligently prosecute the work in such order and manner as will ensure its completion within the specified time. He shall be fully responsible for the prosecution and coordination of all work being performed under the Contract by Subcontractors.

4.1.4. The work in progress shall receive the personal attention either of the Contractor or of a competent and reliable superintendent who shall have full and final authority to act for him. In case the Contractor delegates authority to a superintendent, he shall notify the Engineer in writing, stating the name of the person authorized to act as superintendent, and stating the name or names of the persons authorized to sign the various documents such as Weekly Report of Working Days; Change Order; Force Account Statement; Labor Payroll; and any other documents that may be required during the progress of the work. If at any time progress in keeping with the intent of the Contract shall not have been made, the Contractor shall take such steps as may be necessary to complete the work in the time and manner specified.

4.1.5. In Contracts involving joint adventure, the joint adventurers shall, prior to beginning any work on the Contract, appoint a single representative delegated with full and final authority to act for the organization. The authority and obligations of this representative shall be those of the Contractor. The Engineer shall be notified in writing of the name of this representative and of any subsequent replacements.

4.2 The Contractor is required to arrange his work so as not to interfere with the operations of other Contractors engaged within the limits of his Contract or upon

adjacent work. He is also required to join his work to that of others in a proper manner, in accordance with the spirit and intent of the plans and specifications, and to perform his work in the proper sequence in relation to that of other Contractors.

4.3 Whenever work being done by other Contractors is contiguous or related to the work included in the Contract, the respective right of the various interests involved will be established by the Engineer in order to secure the completion of the various portions of the work in general harmony.

4.4. Cooperation with Public Utilities.

4.4.1. The general location of railroad facilities, of principal water mains, sewer pipes, telephone conduits, gas mains, pipe lines, pole lines, and other public and private utility facilities which will affect construction operations are indicated on the plans insofar as their locations are known. Some of these utilities are to remain in place; others may be removed entirely or in part by the Owners for relocation elsewhere. Bidders shall examine the site and shall consult with the various utility Owners regarding the relocations and adjustments required, also the location of any proposed facilities, and determine for themselves the locations of such utilities on the right of way which may affect their operations, whether or not shown on the plans. Submittal of a proposal will be presumed evidence that the Bidder has familiarized himself with all of the conditions and factors involved and is fully aware of any delay and inconvenience which may be occasioned thereby.

4.4.2. All utility companies having facilities within or adjacent to the limits of construction will be notified as early as possible by the Engineer and furnished with plans, so that all possible adjusting or relocating of facilities to conform with new construction may be completed prior to commencement of work by the Contractor. When adjustments or relocations have not been completed prior to constructing, the Contractor shall notify the Engineer, requesting that this work be done. The Contractor shall then coordinate his operations with the work of Owners making necessary adjustment, removals, or construction of new fixtures, and shall permit free access to the site for such work.

4.4.3. Should there be located within the right of way any public or private utility facilities which are to remain in place and which will interfere with the Contractor's proposed methods of operation, the Contractor shall make all necessary arrangements with the Owners for any temporary or permanent removal or relocation of such facilities desired for his convenience. Any cost involved shall be borne by the Contractor.

4.4.4. The Contractor will be responsible for any damage done to any telephone, telegraph, cable, fiber optic or power poles or lines, water or fire hydrants, gas mains and pipe lines, water mains and pipe lines, sewers, conduits and other accessories and appurtenances of a similar nature which are fixed or controlled by a municipality, public utility company, or corporation. The Contractor shall perform and carry on its work in such manner as not to interfere with or damage fixtures mentioned herein, or as shown on the plans, or discovered during construction which are to be left within the limits of the project. The City will not be responsible for any delay or damage incurred by the Contractor due to working around or joining its work to fixtures left in place.

4.4.5. The Contractor shall be responsible for all damage to any utility facility due directly to his operations regardless of location and he shall repair and replace as necessary any such damaged facility or make payment to the Owner for repair or replacement.

4.4.6. It will be the Contractor's responsibility to contact all utility companies and verify the field location of all utility lines and facilities prior to commencement of work. The Contractor shall notify the utility companies of the intended schedule of work. Caution shall be exercised by the Contractor to avoid disturbing utilities during construction.

4.5. Temporary Suspension of Work. The Engineer shall have the authority to suspend work wholly or in part for such period or periods as he may deem necessary, when weather or other conditions are such that in the opinion of the Engineer the work may be done at a later time with advantage to the City, or for failure on the part of the Contractor to comply with any of the provisions of the Contract. Should it become necessary to stop work for an indefinite period, the Contractor shall store all materials in a manner that will protect them from damage and will not unnecessarily obstruct traffic; shall take every precaution to prevent damage to or deterioration of the work performed; and shall provide suitable drainage of the roadway by opening ditches, shoulder drains, etc.; and by erecting temporary structures where necessary. The Contractor may suspend work for reasonable cause upon the written approval of the Engineer. Liquidated damages shall not accrue during the period in which work is suspended by approval of the Engineer unless such suspension is due to the failure of the Contractor to comply with the provisions of the Contract. If work has been discontinued, the Contractor shall notify the Engineer in writing at least forty-eight (48) hours before resuming operations.

SPECIFICATIONS

SECTION 200

CLEARING AND GRUBBING

200.1. Description. Clearing and grubbing shall consist of removing, cutting and disposing of all brush, vegetation, logs, stumps, rubbish and other materials occurring within the limits of the improvement which will interfere with the excavation or which are unsuitable to be left in the roadway foundation. This shall also include the cutting, removing and disposing of all trees and stumps except those that will not interfere with the construction and not shown on the plans. The Contractor shall exercise due care in his construction operations to prevent marring or scarring of trees that are to remain. Stumps and roots in excavated or fill areas where depth of excavation or fill does not exceed three (3) feet shall be removed to a depth of eighteen (18) inches below subgrade. In fill areas where more than three (3) feet of embankment is required, trees and stumps shall be cut off at the surface of the ground.

Contractor shall do all clearing necessary for performance of his work and shall confine his operations to that area provided through easements, licenses, agreements, and rights-of-way. The Contractor's entrance upon any lands outside of that area provided by easements, licenses, agreements, or public rights-of-way, shall be at the Contractor's sole liability.

At least two weeks prior to the start of construction, property owners shall be notified by the Contractor of the proposed starting date. The purpose of this notification is so that the property owners can remove any small plants or flowers that they, the property owners, desire to save.

200.2. Payment. There shall be no direct payment for this item unless specified. The entire cost and expense of the item shall be included by the Contractor in the price per cubic yard for Excavation.

SECTION 201

EXCAVATION AND EMBANKMENT FOR STREET AND STORM SEWERS

201.1. Description. Excavation shall consist of removing all materials necessary for the proper construction of the work and disposing of this material in a satisfactory manner as approved or directed by the Engineer. Embankment shall be formed of suitable material taken from roadway and drainage excavation, borrow excavation and excavation for structures, and placed in successive horizontal layers distributed uniformly over the full width of the cross section. Embankment shall be made of sufficient height and width so that at the time of acceptance by the City, they will conform to the typical section shown on the plans.

201.2. Classification of Excavated Materials. In these specifications, excavating is divided into two classifications, earth and rock, which shall cover all materials encountered. The determination and classification of such excavated materials will be based on the following definitions:

a. Earth excavation will include all materials not otherwise classified. Decomposed or disintegrated shale which, in the opinion of the Engineer can be effectively plowed, spaded, or removed with power driven excavating equipment, as well as blacktop pavement and gravel base, will be classified as earth.

b. Rock excavation is defined as being sandstone, limestone, flint, granite, quartzite, or similar material, in masses measuring more than one (1) cubic yard in volume or in ledges four (4) inches or more in thickness, and which requires blasting or jack hammering for its practical and effective removal. Should rock be encountered in two (2) or more ledges, each ledge being not less than three (3) inches thick and with inter-lying strata or earth not over twelve (12) inches thick in each stratum, the entire volume from the top of the top ledge to the bottom of the bottom ledge of rock will be classified as rock.

201.3. General. After all stripping has been done, excavation of every description and of whatever substances encountered within the clearing limits of the project shall be performed to the lines and grades indicated on the drawings. All suitable excavated material shall be transported to and placed in fill areas within the limits of the work as specified and shown on the drawings. All excavated materials which are considered unsuitable by the Engineer and any surplus of excavated material which is not required for fill will be known as "waste" and shall be disposed of by the Contractor at his own expense and responsibility and to the satisfaction of the Engineer. Any additional fill material required which is not available from excavation within the project area shall be supplied by the Contractor. All such material brought to the site by the Contractor shall be subject to the approval of the Engineer. During construction, excavation and fill shall be performed in a manner and sequence that will provide positive drainage at all times.

a. Unsuitable Material is defined as muck, frozen material, organic material, top soil, rubbish, and rock with a maximum dimension greater than 24 inches.

b. Suitable Material. Suitable material is defined as entirely imperishable with that portion passing the No. 40 sieve having a liquid limit not exceeding 40 and a plastic

index not exceeding 25, when tested in accordance with ASTM D-423 and D-424, respectively.

1. Rock Embankment. Material for rock embankment shall be free of unsuitable material and shall contain, by volume, greater than 10 percent rock or gravel having a maximum dimension greater than 3 inches but not greater than 24 inches.

2. Earth Embankment. Material for earth embankment shall be free of unsuitable material and shall, contain by volume, less than 10 percent rock or gravel having a maximum dimension greater than 3 inches.

201.4. Excavation for Structures. All structures shall be founded on undisturbed subsoil. Unauthorized excavation below the specified structure subgrade shall be replaced with concrete, at the expense of the Contractor.

Excavation shall be made in open cut to alignment and depth as shown on the profiles and drawings, except as otherwise indicated in the specifications and drawings. The Contractor shall make all necessary excavations for work included in this Contract.

Excavation for manholes, curb inlets, junction boxes and similar structures shall be sufficient to leave at least twelve (12) inches in the clear between their outer surfaces and the embankment or timber which may be used to hold and protect the excavation. In all cases the clearance between the outer face of structures and the surrounding excavation shall be sufficient to allow the proper performance of the work including the plastering of exterior wall surfaces where required by the specifications or plans.

The Contractor shall not open more trench in advance of construction than necessary to expedite the work, and in no case shall the length of open trench be greater than 300 feet. The trench shall be backfilled at the end of each day except as may be required to begin the next day's work. In no case shall more than ten (10) feet of pipe be left exposed. Trenches in the road shall be plated with steel sheets or patched with cold patch overnight. Plates shall be properly anchored and all edges of the plate shall be ramped with asphalt surface mix to prevent rattling.

Wherever necessary to prevent caving, the excavation shall be adequately sheeted, braced and drained so that workmen may work therein safely and efficiently. An engineered plan shall be submitted to Public Works for any sheeting, cribbing or bracing. Where trench bottom is in rock, the excavation limits shall allow solid rock to be exposed and cleaned of all loose material and cut to a firm surface before any foundation concrete is placed.

Whenever wet or otherwise unstable soil that is incapable of properly supporting the structures, as determined by the Engineer, is encountered such soil shall be removed to the depth required and the excavation backfilled to the proper grade with coarse sand, fine gravel, or other suitable material as may be authorized. All excavations for structures shall be kept dry and no pipe or reinforcing steel shall be installed in water and no water shall be permitted to inundate the reinforcing steel before concrete has been placed. All excavations shall be kept dewatered to the extent that water will not come in contact with any concrete within twelve (12) hours after

placing. When excavations are carried below ground water elevations such excavations shall be dewatered by lowering and maintaining the ground water level at least twelve (12) inches below such excavations during all construction, including subgrade excavation, placing of reinforcing steel or pipe, placing of concrete, plastering of masonry, and shall be maintained in a dry condition until all concrete has been placed and allowed to harden for at least twelve (12) hours as specified above.

201.5. Excavation for Roadway. Grading shall conform to the typical sections shown on the drawings and shall be finished within a tolerance of one-half (1/2) inch of the grades indicated. Any soft and unsatisfactory material within the limits of the pavement areas shall be removed and disposed of as directed by the Engineer, and the basis of payment shall be the same as for excavation. Fill material required in excess of that produced by normal grading operations shall be excavated from areas indicated on the drawing or as directed by the Engineer. Excavated material not acceptable for use as fill shall be disposed of by the Contractor at his own expense as directed by the Engineer.

Cut compaction shall be performed at proposed roadway pavement after removal of the roadway excavation material to the required section. A surface parallel to the pavement slope, 12 inches below the bottom of the pavement or lowest base course, shall be temporarily exposed for the full width below roadway inslopes. The exposed material shall be manipulated and compacted to no less than the required density to a depth of 6 inches. The material above this compacted plane shall be spread in layers not exceeding 8-inch loose thickness, each layer being wetted or dried as necessary and compacted to the specified density. The entire volume of material so handled and compacted, including the 6-inch layer compacted in place, will be considered as Cut Compaction. All cut compaction shall be tested per 201.11.b.

Cut compaction shall be performed an additional depth of 12 inches for 50 feet on each side of the intersection of the natural ground and the top of the subgrade, then uniformly graded for 30 feet to meet the depth requirements above.

The existing ground for the full width between roadway slopes under embankments less than 18 inches high shall have cut compaction to a depth to ensure that 18 inches of material of the required density and moisture is below the top of the finished grade.

201.6. Excavation for Storm Sewers.

a. General. The Contractor shall perform all excavation of every description and of whatever substances encountered to the depths indicated on the drawings or as otherwise specified. During excavation, material suitable for backfilling shall be piled in an orderly manner a sufficient distance from the banks of the trench to avoid overloading and to prevent slides or cave-ins. All excavated materials not required or suitable for backfill shall be removed and disposed of off the site, by and at the expense of the Contractor. Such grading shall be done as may be necessary to prevent surface water from flowing into trenches or other excavations, and to maintain the flow of water in natural water courses on or adjacent to the site. Any water accumulating in trenches or other excavations, shall be removed by pumping or by other approved methods. Unless otherwise indicated or authorized, excavation shall be by open cut. The use of excavation machinery will be permitted except in places where operation of same will cause damage

to trees, buildings, or existing structures above or below ground, in which case hand methods shall be employed.

b. Trench Bracing and Sheeting. If trench box construction is used, the trench box shall not extend below the top of the pipe. An engineered plan shall be submitted to Public Works for any sheeting, cribbing or bracing. The plan must be approved by the Engineer prior to beginning work.

c. Dewatering of Trenches. During excavation, pipe laying and jointing, or other work necessary for the installation of the storm sewers, trenches shall be kept free from water and in a workable condition. Where the trench bottom is found to be unstable or unsatisfactory because of water, and in all cases where the trench bottom falls below the ground water level by means of well points, pumps or by other means acceptable to the Engineer a sufficient amount to keep the trench free from water and the trench bottom stable at any time that work within the trench is in progress. As specified herein before the Contractor shall take all necessary measures to prevent surface water from entering the trench and he shall further take all necessary measures to prevent the inundation or damage to any private property or structures adjacent to the site of the work.

d. Trench Alignment and Grade. The alignment, depth, and grade of all storm sewer trenches shall be maintained as shown on the drawing. Establish required uniform line and grade in trench from benchmarks identified by the Engineer. Maintain this control for minimum of 100 feet behind and ahead of pipe-laying operation. Use laser beam equipment to establish and maintain proper line and grade of work.

e. Trench Width. Width shall be no wider than is necessary for the proper jointing of the pipe and in no case shall exceed the trench widths in the corresponding bedding details, unless specifically authorized by the Engineer.

f. Unauthorized Trench Widths. Where trench widths as specified above, are exceeded for any reason other than by order of the Engineer, either special pipe embedment, concrete cradle, concrete encasement, or other suitable methods shall be required as demanded by loading conditions and as ordered by the Engineer. Any additional work required, as stipulated above, as a result of unauthorized over excavation shall be performed by and at the expense of the Contractor.

g. Preparation of Pipe Subgrade. Pipe subgrade shall be prepared after rough trenching is complete and shall be done with hand tools immediately prior to installing pipe. The bottom of the trench shall be prepared so as to provide uniform support of the bottom quadrant of the pipe and bell holes or depression shall be hand excavated where bell and spigot pipe is used. The trench bottom shall be evenly graded as indicated on the plans and areas which are too high shall be shaved as required. Any portions of the trench bottom which are found to be too low shall be filled with suitable material, thoroughly rammed and tamped and brought to true grade.

h. Replacement of Unsuitable Pipe Foundation Material. Where, in the opinion of the Engineer, the trench bottom is found to be of a wet or otherwise unstable material or where it is impossible to provide proper bearing for the pipe, or where it is found to be

impossible to carry on construction operation due to the condition of the trench bottom, the Contractor shall remove all unstable or unsuitable material to a depth of not less than four (4) inches below the elevation of the pipe subgrade over the entire width of the trench and shall replace and backfill with a suitable finely divided material of acceptable quality and sufficiently damp for proper compaction. Such material shall be thoroughly compacted by tamping or rolling over the entire width of the trench and shall be brought to proper grade and shape and the proper elevation for the installation of the pipe as shown on the plans.

201.7. Blasting. Contractor is responsible to comply with all regulations and permitting for blasting.

All excavated rock or shale which cannot be handled and compacted as earth shall be kept separate from earth and shall not be mixed with other backfill except as specified and directed.

201.8. Excavation through Pavement. Pavement, pavement base course, concrete walks, and concrete curbing shall be cut and removed only where shown on the plans, where specified or where directed and authorized by the Engineer. Cuts shall be no larger than necessary to provide adequate working space for installation of the pipe appurtenance or structure, except where other miscellaneous removals are required on the drawings. Payment for removal of concrete pavement, sidewalk, floor slabs, and curbing shall be made according to the unit prices shown in the bid form. Measurement of quantities so removed shall be as specified hereinafter in the applicable sections.

All cuts in pavement, walks or curbing shall be neatly sawn and shall be straight and parallel to existing construction joints. Any pavement, curbing, gutter or sidewalks, the removal of which was not required in conjunction with construction under this Contract, which is damaged due to construction operations by the Contractor shall be removed and replaced by the Contractor in first class manner, as hereinafter specified, at his own expense.

201.9. Protection of Existing Utilities. Due care must be taken not to disturb inlet covers, manhole frames, valve boxes, fire plugs, house connections or private water pipes. If not set to the proper grade they will be adjusted by the various City Departments or public utility corporations or private Owners, unless otherwise directed by the Engineer.

The Contractor will be held responsible for any damage done to house connections or private water pipes and accessories, if two (2) feet or more below top of curb and one (1) foot or more back of face line of curb, in the case of street construction, or if two (2) feet or more below the grade of finished pavement in connection with alley construction.

201.10. Pavement Replacement. All pavement, curbing, gutter, or sidewalks removed during construction of the project for any reason shall be replaced unless otherwise shown on the drawings or directed by the Engineer, the replacement construction conforming in type, quality, and dimensions to that of the portion so removed. Replacement shall conform to City patching details where applicable.

201.11. Embankment.

a. Preparation of Ground Surface for Fill. All vegetation, such as roots, brush, heavy sod, heavy growth or grass, and all decayed vegetable matter, rubbish, and other unsuitable material within the area upon which fill is to be placed shall be stripped or otherwise removed before the fill is started. In no case will such objectionable material be allowed to remain in or under the fill area. Sloped ground surfaces steeper than one (1) vertical to four (4) horizontal on which fill is to be placed, shall be plowed, stepped (benched), or broken up in such manner that the fill material will bond with the existing surface.

b. General. Where filling is required to raise the subgrade under areas to be paved or surfaced, all fill materials shall consist of earth or other approved material. All organic or other undesirable material shall be removed. Where embankments, regardless of height, are placed against hillsides or existing embankments, either of which have a slope steeper than 1 vertical to 4 horizontal, the existing slope shall be benched or stepped in approximately 24 inch rises as the new fill is brought up in 8 inch maximum layers or lifts. The material bladed out, the bottom of the area cut into, and the embankment material being placed, shall be compacted to the required density. Material cut out, bladed into place and compacted shall not be measured and paid for directly but will be considered as incidental work.

All fill under paved surfaces such as streets and parking lots shall be compacted by a power roller or other approved equipment and the subgrade brought to a reasonably true and even plane. Earth used for fill shall be placed in layers not more than eight (8) inches thick, an uncompacted measurement, and shall be compacted as specified before the next layer is placed. Each layer shall be wetted or dried as necessary, and shall be compacted to the required density. Regardless of the type of equipment used, the roadway shall be compacted uniformly and the surface kept reasonably smooth at all times. If large pieces of heavy clay are encountered, the material shall be broken down by suitable manipulation to permit satisfactory embankment construction. If shale is encountered, the shale shall be broken down as much as practical and compacted at or above optimum moisture.

Each layer shall be uniformly spread, moistened as required, and then compacted to ninety percent (90%) of maximum density, obtained at the optimum moisture content, as determined by AASHTO Method T-99-38. The top eighteen (18) inches shall be compacted to ninety-five percent (95%) of maximum density. The field density of the lift will be determined in accordance with AASHTO T 191 or T 205, using the total material or T238, Method B Direct Transmission, for wet density. If nuclear density methods are used, moisture content will be determined in accordance with AASHTO T239. One test shall be taken for every 1,000 linear feet or fraction thereof for each lift. Testing is to be done by a third party independent testing agency or by the Contractor if the Contractor has demonstrated to the Engineer that Contractor employs qualified persons and maintains qualified equipment to conduct density testing. Test results shall be furnished on forms acceptable to Engineer. Contractor shall proof roll the final lift of fill material in accordance with the proof rolling requirements of Section 205.2. Costs of all testing and retesting are the responsibility of the Contractor.

201.12. Backfill.

Classification of backfill materials. Backfill materials in these specifications shall conform to the Standard Installation Direct Design (SIDD) categories per the chart below.

SIDD Soil	USCS	Standard AASHTO
Gravelly Sand (Category I)	SW, SP, GW, GP	A1, A3
Sandy Silt (Category II)	GM, SM, ML, Also GC with less than 20% passing #200 sieve	A2, A4
Silty Clay (Category III)	CL, MH, GC, SC	A5, A6

a. Roadway Backfill. After completion of roadway, curb and gutter, and other construction below the elevation of final grades, all forms shall be removed and the excavation shall be cleaned of trash and debris. Backfill shall be free of all objectionable material and shall be placed in horizontal layers not more than eight (8) inches thick, and shall have a proper moisture content for the required degree of compaction. All parking areas, driveways, streets, and other paved areas shall be backfilled with approved material and compacted to ninety-five percent (95%) of maximum density obtained at the optimum moisture content. Testing is to be done by a third party independent testing agency or by the Contractor if the Contractor has demonstrated to the Engineer that Contractor employs qualified persons and maintains qualified equipment to conduct density testing. Test results shall be furnished on forms acceptable to Engineer. Tests shall be taken once for every 1,000 linear feet or fraction thereof for each lift. Costs of all testing and retesting shall be borne by the Contractor.

Backfilling and grading behind curbs shall be performed to the lines and grades indicated on the drawings. The backfilled area shall provide a smooth, even transition from the existing lawn grades to the curb and shall be done so as to assure desired drainage.

When indicated on the plans and included as a bid item, the top four (4) inches of backfill behind curbs shall be topsoil, free from rocks, gravel, and any undesirable material. This material may be either topsoil available within the limits of the project or it may be topsoil furnished by the Contractor. Payment for topsoil will be made on the basis of the bid quantity, except when:

- Errors are found in the original computation or ground elevations.
- An authorized change in grade or typical section is made.
- An unauthorized deviation decreases the quantities on the plans.
- All driveways, paved or unpaved, which are disturbed by grading or excavation of any kind shall be graded and shaped to provide a reasonable approach, and shall upon completion of the job be left in passable condition. All driveway approaches except those which the Owner is having paved at the time of this Contract shall receive four (4) inches of crushed rock to the extent of the portion disturbed. Crushed rock shall be a

maximum size of one (1) inch surface rock.

b. Trench Backfill

1. Materials. All materials which are to be compacted by tamping or rolling, including all tamped embedment, shall be free from sticks, large roots, or other organic matter coarser than grass roots, stones, hard lumps, and clods, and shall have a moisture content such that optimum compaction is obtained when properly tamped or rolled.

Granular material for replacement of unsuitable foundation material removed from trench bottoms shall consist of coarse sand, lime gravel, and shall be free from dust, clay, and other materials which would cause the materials to crack or cake. When tested with square mesh laboratory sieves, not less than ninety-five percent (95%) shall pass a three-eighths (3/8) inch sieve and not more than five percent (5%) shall pass a No. 10 sieve.

Flowable backfill shall be a Controlled Low Strength Material (CLSM). CLSM shall be composed of Portland cement, fly ash (optional), fine aggregate, coarse aggregate (optional), water, and a shrinkage compensator. Cement shall be either Type I or Type II Portland cement. Mixing water shall be potable. Air entrainment admixture shall consist of an organic compound which will result in air contents as prescribed by ASTM C 173 or C 231. Fine aggregate shall be washed and consist of clean, hard, durable and uncoated particles of natural or manufactured sand or a combination thereof, with or without mineral filler. Aggregate shall be free of injurious amounts of salt, alkali, vegetable matter or other objectionable material. Coarse aggregate shall be sound, durable, clean rock or broken concrete (2" to 8" square) to minimize the quantity of CLSM. The CLSM shall be placed to a depth of 2 feet then coarse aggregate may be added to the CLSM mixture until the top of the CLSM and top of aggregate are approximately equal. The process may be repeated until the fill is completed. CLSM shall be removable (less than 100 PSI) and comply with the following mix design:

Cement	144 lbs
Water	396 lbs
Sand	2,698 lbs
Air entrainment	13%

Where CLSM is being placed over or adjacent to crushed stone backfill, a layer of filter fabric shall be installed between the two materials.

Inundated sand backfill is not acceptable.

Coarse aggregate (1-1/2") may also be added at the batch mix plant. Coarse aggregate is not to replace fine aggregate.

2. Compaction. All backfill shall be thoroughly compacted by pneumatic

tampers, or other approved methods, to the original state of consolidation of the soil encountered. Backfill shall be placed in uncompacted lifts not to exceed six (6) inches and each lift shall be thoroughly and adequately compacted. Care shall be exercised not to disturb the pipe when placing backfill. The compacted earth backfill shall be brought to an elevation of approximately six (6) inches below the finished surface grade and then surface grade constructed. Testing shall be similar to that required at embankments per 201.11.b except that tests shall be taken once for every three hundred (300) linear feet of trench or fraction thereof for every other lift. Backfill using 1" clean aggregate does not require testing.

After backfill and compaction is complete trenches shall be leveled off and grading shall be performed as is necessary to restore yards or other grassed or sodded areas to their original condition or better.

Backfill under pavements shall be flowable fill. Flowable fill shall be placed from a maximum of one foot (1') above top of utility to the underside of pavement base course. If pavement does not have a base course, stop flowable fill six inches (6") below bottom of pavement and provide a six inch (6") cushion course of 1" clean aggregate.

3. CLSM Maximum Depth. – The depth of flowable fill shall comply with the following:

a. If the distance from the top of the utility/pipe to the subgrade is five feet or less, the entire depth from subgrade to twelve (12) inches above the top of utility/pipe shall be flowable fill.
b. If the distance from the top of the utility/pipe to the subgrade is over five feet, the top four feet below subgrade shall be flowable fill. The remainder of the backfill may be overfill soil compacted per the specifications or flowable fill at the contractor's option.

4. Utility Crossings. – Where a utility is located above another utility or where two utilities cross, the bedding material shall be extended to properly bed the higher utility then the overfill soil and flowable fill placed per specifications.

5. Plates. – Flowable Fill requires a minimum of 24 hours to set. This will require trenches with flowable fill to be plated or barricaded trenches with traffic detoured in accordance with MUTCD standards. Maximum trench width requiring flowable fill is six (6) feet wide. See details 540.01 and 9A for maximum trench width.

When a backfilling operation of an excavation occurs in the traveled way, whether transverse or longitudinal, and the project cannot be properly completed within a standard work day as defined by section 12A of the City of Columbia Code of Ordinances, steel plate bridging with a non-skid surface and shoring will be required to preserve unobstructed traffic flow. In such cases, the following conditions shall apply:

a. Steel plates used for bridging must extend a minimum of 12" beyond the edges of the trench.
b. Steel plate bridging shall be installed to operate with minimum noise.
c. The trench shall be adequately shored, as mentioned in Section 201, to support the bridging and traffic loads.
d. Temporary paving with fine graded asphalt concrete shall be used to feather the edges of the plates, if plate installation is used.
e. Bridging shall be secured against displacement by using adjustable cleats, shims, or other devices.

Approach plate(s) and ending plate (if longitudinal placement) shall be attached to the roadway by a minimum of 2 dowels pre-drilled into the corners of the plate and drilled 2" into the pavement. Subsequent plates shall be butted to each other. Fine graded asphalt concrete shall be compacted to form ramps, maximum slope 8.5% with a minimum 12" taper to cover all edges of the steel plates. When steel plates are removed, the dowel holes in the pavement shall be backfilled with either graded fines of asphalt concrete mix, concrete slurry or equivalent slurry that is satisfactory to the City of Columbia.

The contractor is responsible for maintenance of the steel plates, shoring, asphalt concrete ramps, and ensuring that they meet minimum specifications. Unless specifically noted in the special provisions, or approved by the City of Columbia, use of steel plate bridging should not exceed 4 consecutive working days in any given week. Backfilled excavations shall be covered with a minimum 3 inches temporary layer of cold asphalt concrete until permanent surface can be installed.

Trench Width	Minimum Plate Thickness
1'	½"
2'	¾"
3'	7/8"
4'	1"
5'	1.25"
6'	1.25"

6. Emergency Situations. – An urgent utility situation that takes place during non working hours as defined in the specifications or occurring during a time when local concrete plants are not in operation.

Trench Backfill - work occurring during an emergency situation may be done using the following bedding material. Bedding material shall be crushed stone or crushed gravel conforming to the requirements of ASTM Standard C33, and having a gradation as follows:

Sieve Size	% Passing
5/8"	90-100
½"	75-100
3/8"	30-75
#4	5-25
#8	3-6
#30	2.5-5
#200	1-2.5

During emergency situations the aforementioned bedding material may be used in placed of flowable fill as shown on detail 120, and brought up in compacted six (6) inch lifts.

7. Trenches wider than 6 feet. – When excavation becomes wider than six (6) feet adhere to the following:

a. Residential Streets

1. Concrete

a. Minimum of two entire concrete panels are to be removed.

b. May close street (except in cul-de-sacs) or provide MUTCD compliant traffic control.

c. Excavate all subgrade within one (1) foot of existing panels to a minimum depth of eighteen (18) inches.

d. Backfill to be brought up with compacted aggregate in six (6) inch lifts and tested per specifications OR flowable fill may be used.

e. Four (4) inches of type 3 aggregate base is to be placed under the street.

f. Dowel Panels per specifications.

2. Asphalt

a. Minimum size of replacement to be ten (10) foot by ten (10) foot square.

b. Two (2) foot minimum clearance to be left between edge of pavement replacement and leading edge of gutter.

c. May close street (except in cul-de-sacs) or provide MUTCD compliant traffic control.

d. Excavate all subgrade within one (1) foot of existing pavement to a minimum depth of eighteen (18) inches.

e. Backfill to be brought up with compacted aggregate in six (6) inch lifts and tested per specifications OR flowable fill may be used.

f. Four (4) inches of type 3 aggregate base is to be placed under the street

g. Pave per asphalt paving specifications

Arterials and Collector Streets – Will be handled on a case by case basis with City of Columbia Public Works Department.

8. Required Testing. – Testing shall follow section 201.11b, except proof rolling shall not be required.

c. Structure Backfill. Backfilling of all structures shall be permitted only after an adequate curing time, as determined by the Engineer, has elapsed.

All excavations shall be backfilled to the lines and grades shown on the drawings. In no instance shall backfill be dumped, bull-dozed, or otherwise deposited in bulk upon the newly-constructed structure. After the required curing time, the excavation shall be backfilled by depositing, entirely without shock and with careful pneumatic tamping, suitable earth, sand, or other acceptable material in lifts not to exceed six (6) inches in compacted thickness. Backfill shall be deposited at approximately the same elevation on opposite sides of the structure and shall be compacted in place to a density equal to or greater than ninety-five percent (95%) of maximum density as determined by the Standard AASHTO Method T-99-38. Inundated sand backfill shall not be used.

No trench backfill material containing rock, or debris from rock excavation, shall be placed in the upper eighteen (18) inches of the excavation except with the specific permission of the Engineer. Large stones may be placed in the remainder of the trench backfill only if well separated and so arranged that no interference with backfill compaction will result.

Any deficiency in the quantity of material for backfilling the excavation, or for filling depressions caused by settlement, shall be supplied by the Contractor. All excavated material in excess of that necessary to fill the trench to the grade shown on the drawings shall be removed and disposed of by the Contractor.

d. Responsibility of Contractor for Backfill Settlement. The Contractor shall be responsible for the satisfactory compaction and maintenance thereof, for all trenches and structural excavation of any description required under this Contract. Contractor shall warrant their work for a period not less than the correction period from the date of acceptance. If prior to the expiration of this warranty, any trenches or other excavations are found to have settled they shall immediately be reworked by the Contractor and restored to the specified grades. Any sod, paving, or other surfacing damaged by settlement of trenches shall be replaced by and at the expense of the Contractor.

201.13. Method of Measurement and Basis of Payment.

a. Roadway Excavation. Final measurement of roadway excavation will not be made unless otherwise designated in the Contract. A partial check of existing ground elevations will be made at the time slope stakes are set, and of the finished work for deviations in the grade, widths or slopes from the authorized grade or typical section. Plan quantities will be used for final payment of Earth Excavation except when:

- Errors are found in the original computation or ground elevations.
- An authorized change in grade or typical section is made.
- Unauthorized deviations decrease the quantities on the plans.

- Rock Excavation is encountered. Roadway excavation will be re-computed for these sections where the ground elevations shown on the plans are found to be erroneous. No re-computation of plan quantities will be made when the actual ground elevations are considered to generally agree with the ground line shown on the plans. Where the Engineer authorized a change in grade or typical section affecting the volume of excavation, the volume of excavation allowed for payment will be determined by the average end area method on the basis of the revised grade or typical section. Where unauthorized deviations result in a decrease in the quantities the plans, the deviations will be measured and deducted from the plan quantity. The volume of rock excavation will be determined by the average end area method. The volume of earth excavation allowed for payment will be the total volume of roadway excavation shown on the plans or the revised quantity, regardless of classification, minus the measured volume of rock excavation.

Basis of Payment. Payment for roadway excavation will be made at the Contract unit price per cubic yard (for each class of excavation) which price shall be full compensation for the excavating and hauling; placing and forming of embankments; preparation of subgrade; clearing grubbing, and any work noted on the plans to be included in the price bid for excavation. Payment will be made under:

Item No. 201.1. Earth excavation, per cubic yard.
Item No. 201.2 . Rock excavation, per cubic yard.

b. Trenching.

1. Earth. Payment for all trench excavation and backfill in earth shall be included in the Contractor's unit price per lineal foot for storm sewer construction as set forth in the proposal. Such unit price shall include cost of all equipment, labor, and materials used in conjunction with the trenching operations. Payment will be made under:

Item No. 201.3. Storm sewer construction, per lineal foot.

2. Rock. Payment for all trench excavation and backfill encountered in rock, as defined in this section of the specifications, shall be made at the unit price per cubic yard for rock excavation, storm sewer as set forth in the proposal. Upper pay limit for rock excavation shall be the top surface of the rock and lower pay limit shall be the bottom stratum or layer of the rock or the flow line of the pipe, whichever is higher in elevation. Width limit for payment for rock excavation shall be per pipe embedment details 540.01 and 540.02. Payment will be made under:

Item No. 201.4. Rock excavation, storm sewer, per cubic yard.

c. Structural Excavation.

1. Earth. Payment for all earth excavation and backfill required in

constructing drainage structures such as catch basins, curb inlets, junction boxes, and headwalls, shall be included in the unit price for each such structure as set forth in the proposal. Payment for earth excavation and backfill required in construction of the reinforced concrete boxes and retaining walls shall be included in the unit price for structural reinforced concrete as set forth in the proposal. No separate pay item for this structural earth excavation shall be included in the Contract.

2. Rock. Where rock, as defined herein, is encountered in the excavation for structures such as those listed above, it shall be paid for at the unit price per cubic yard for rock excavation, storm sewer as set forth in the proposal. Upper and lower pay limits shall be as defined hereinbefore for trenching in rock and the later limits shall be defined as vertical planes spaced eight (8) inches outside the walls of any structure. Payment will be made under:

Item No. 201.5. Rock excavation, storm sewer, per cubic yard.

d. Crushed Rock for Driveways. Crushed rock for driveway approaches shall be paid at the Contract unit price per ton for crushed rock in place. Payment will be made under:

Item No. 201.6. Crushed rock for driveway approaches, per ton.

e. Topsoil for Backfill in Lawns. Topsoil for backfill in lawns shall be paid at the Contract unit price per cubic yard for topsoil in place. Payment will be made under:

Item No. 201.7. Topsoil for backfill in lawns, per cubic yard.

SECTION 202

BORROW EXCAVATION

202.1. Description. If the filling is in excess of excavation the Contractor shall secure the necessary material from such borrow pits as may be indicated on the plans, or if no such location is indicated, or if the amount in the indicated location is insufficient, he shall furnish material satisfactory to the Engineer.

202.2. Methods in Borrow Excavations. If the Contractor places more borrow than is required, thereby causing a waste of excavation, the amount of such waste shall be deducted from the borrow as measured in the borrow pit. Borrow material shall not be placed until after the roadway excavation has been placed in the fill. All borrow pits shall be neatly trimmed and left in such shape as to permit reasonably accurate measurement after the excavation has been completed.

202.3. Method of Measurement. Final measurements of borrow area will not be made.

202.4. Basis of Payment. The plan quantities will be used for final payment of borrow excavation in cubic yards.

The foregoing work, which includes all material, equipment, tools, labor, compaction and work incidental thereto, will be considered as completely paid for by the Contract price per cubic yard under:

Item 202.1. Borrow excavation, per cubic yard.

SECTION 203

SEEDING AND MULCHING

203.1 Description. This section covers the operations necessary to produce established grass covered areas, including preparation of the soil surface, application of starter fertilizer, seeding, sodding, compacting and maintenance.

All areas with vegetation cover that are disturbed by construction operations, either by grading, parking of equipment, trenching, or any other operation that destroys the existing vegetative cover shall be seeded or sodded as specified herein.

a. Seeding. All disturbed existing vegetated areas shall be seeded, including grassy areas, and pasture lands.

b. Sodding. All disturbed areas shall be seeded unless specifically noted on the plans and Contract documents. In cases where sod is required, the type of sod to be used shall follow the requirements of section 204

Disturbed areas outside the authorized construction limits shall be seeded and mulched, or sodded at the Contractor's expense.

203.2. Personnel and Equipment. All work shall be performed by personnel who are experienced and qualified in the work required, utilizing equipment such as fertilizer spreader, farm tractor with tilling equipment, harrow, and power drawn precision brillion-type seeder designed to uniformly distribute the seed, cover, and firm the soil in one operation.

203.3. Submittals. The Contractor shall furnish to the Engineer a typed and signed statement which certifies that each container of seed delivered to the Contractor for this project is fully labeled in accordance with the Federal Seed Act and is at least equal to the requirement for seed listed in the seed paragraph of this specification. This certification shall appear on or with all copies of invoices for the seed.

203.4. Materials.

a. Topsoil shall consist of a fertile, friable soil of loamy character, free of sub-soil, clay, hard clods, stones, pebbles and other similar material. Topsoil shall be placed at a depth of four (4) inches. Topsoil shall contain a normal amount of natural humus and be reasonably free of roots, sand, noxious weed seeds, sticks, brush and other litter. The topsoil shall be obtained from well-drained, arable land, and be of an even texture so that all the soil will pass a ½ inch screen. The topsoil shall not be infested with nematodes or with any other noxious animal life or toxic substances. Compost shall be rototilled with the soil at a mixture of 2 inches of compost to 4 inches of soil for a minimum depth of 6 inches. Topsoil shall exhibit an acidity range (pH) of 6.0 to 8.5.

b. Seed shall be labeled in accordance with U.S. Department of Agriculture Rules and Regulations under the Federal Seed Act and shall comply with the requirements of the Missouri Seed Law.

The pure live grass seed mixture to be used in lawn and undeveloped areas shall be as follows:

Type	% of Mixture by Weight	Minimum Purity	Minimum Germination
Ultimate Tall Fescue	30%	99%	90%
Fine Lawn Elite Tall Fescue	30%	98%	90%
Falcon Four Tall Fescue	20%	99%	90%
Annual Rye	20%	99%	90%

The percent of mixture by weight is for pure live seed (PLS). The seed broadcast shall be a minimum of 5 pounds per 1,000 square feet. Weed seed shall not exceed 1.0% by weight of the mixture. A certification of the mixture shall be furnished to the Engineer prior to seeding.

c. Fertilizer shall be a mixture containing 5.5 pounds of soluble nitrogen, 16 pounds of phosphorous and 16 pounds of potash per 100 pounds.

d. Agricultural lime material shall be used for soil neutralization with not less than 90% passing the No. 8 sieve.

e. Mulch shall consist of the application of a vegetative covering of one of the following types:

1. Type I Mulch shall be the cereal straw from stalks of oats, rye, wheat or barley, which is clean, bright, and free of mold. The straw mulch shall be dry and relatively free of undesirable seed and foreign material.

2. Type II Mulch shall be as specified above for Type I mulch except that it shall also include the application of an overspray material consisting of virgin wood cellulose fibers or recycled slick paper as herein specified. The overspray shall be green in color after application and shall have the property to be evenly dispersed and suspended when agitated in water. When sprayed uniformly over vegetative mulch, the mulch fibers shall form an absorbent cover, allowing percolation of water to the underlying soil. The mulch shall be packaged in moisture resistant bags with the net weight of the packaged material plainly shown on each bag. The mulch fibers shall not be water soluble.

   Virgin wood cellulose fibers shall be produced by either the ground or cooked fiber process and shall have the following properties:

Moisture Content, Percent by Weight (maximum)	15%
Organic Matter-Wood Fiber, Percent by Weight (minimum)	80%
Ph	4.3-8.5

Recycled slick paper mulch shall be produced from printers slick paper containing wood cellulose and kaolin clay. Recycled newsprint or cardboard will not be allowed. The material shall be free of other material or fillers and shall have the following properties:

Moisture Content, Percent by Weight (maximum)	8%
Ph	4.5-6.5

The Contractor shall furnish certification from the manufacturer that the overspray mulch material complies with these specifications.

3. Type III Mulch shall be material consisting of virgin wood cellulose fibers as herein specified. The mulch shall be green in color after application and shall have the property to be evenly dispersed and suspended when agitated in water. When sprayed uniformly over the soil surface, the mulch fibers shall form an absorbent cover, allowing percolation of water to the underlying soil. The mulch shall be packaged in moisture resistant bags with the net weight of the packaged material plainly shown on each bag.

   Virgin wood cellulose fibers shall be produced by either the ground or cooked fiber process and shall have the following properties:

Moisture Content, Percent by Weight (maximum)	15%
Organic Matter-Wood Fiber, Percent by Weight (minimum)	80%
Ph	4.3-8.5

The Contractor shall furnish certification from the manufacturer that the mulch material complies with these specifications.

203.5. Construction Requirements

a. Seeding shall not be placed from October 16 to December 31. Full seeding shall only be placed from January 1 to May 15 and from August 15 to October 15. Seeding shall not be placed on frozen or snow covered ground. Partial seeding shall be placed from May 16 to August 14. Type II mulch shall be used with partial seeding. The application rates for partial seeding are as shown below:

Lime	100% of the specified quantity
Fertilizer	75% of the specified quantity
Seed	50% of the specified quantity

When partial seeding is placed, the remainder of the fertilizer plus 75% of the specified quantity of seed shall be applied by hydraulic overseeding from August 16 thru October 15. Hydraulic overseeding shall be applied over the

existing Type II mulch. Seed and fertilizer, separately or in combination, shall be mixed with water, and constantly agitated so that a uniform mixture can be applied hydraulically to the specified areas. The ratio of seed and fertilizer to water shall be calculated to achieve the specified coverage rates using a total of 500 gallons of water per acre applied in 2 applications. Seed shall not be added to the water more than 4 hours before application.

b. For Type I or Type II Mulch: Seedbed preparation in lawn areas shall be accomplished by grading the disturbed areas and adding at least 4 inches of topsoil. The surface on which the topsoil is to be placed shall be free of all loose rock and foreign material greater in any dimension than 1/2 the depth of the topsoil to be added and the surface shall be loosened with a disc harrow just prior to being covered with topsoil. Topsoil shall be placed and spread to a depth sufficiently greater than specified so that after settling, the completed work will conform with the elevations shown on the plans. After spreading, all large clods and foreign material shall be removed by the Contractor.

Seedbed preparation in undeveloped areas shall be accomplished by: tilling to a depth of 4 inches with a disc harrow, followed by smoothing with a weighted spike tooth harrow. After smoothing, all rocks and clods greater in any dimension than 2 inches, and all foreign material shall be removed by the Contractor. Designation of areas as lawn or undeveloped will be determined by the condition of the area at the start of construction.

Before final raking, areas to be seeded shall be limed at the rate of 92 pounds per 1,000 square feet of area and fertilized with the specified mixture by spreading evenly at the rate of 7 pounds per 1,000 square feet of area. Both operations shall be performed by using a mechanical spreader of the rotary type. The area shall then be raked to a smooth, even surface and the soil loosened to a depth of one inch in preparation for the seed. No seed or mulch shall be placed until the Engineer accepts the grade and seedbed.

Seeding shall be accomplished by using a mechanical spreader. The seed mixture shall be evenly distributed over the area at the rate of 5 pounds per 1,000 square feet. Immediately after the seeding is completed, all seeded areas shall be mulched as described below for that type of mulch specified.

1. Type I Mulch must be applied in an even layer approximately 1/4 inch in depth. Immediately after placement of the mulch, the entire mulched area shall be thoroughly saturated with water.

2. Type II Mulch shall be applied same as for Type I Mulch with the addition of an overspray. The overspray shall be hydraulically applied as a separate operation at the rate of 750 pounds per acre. The overspray material shall be mixed with water in a manner to provide a homogeneous slurry. Equipment for mixing and applying the slurry shall be capable of applying it uniformly

over the entire vegetative mulched area. The slurry mixture shall be agitated during application to keep the ingredients thoroughly mixed.

c. For Type III Mulch: Seedbed preparation shall be accomplished in the same manner as for Type I and II mulch up to the point of seeding. The seed and Type III mulch will be mixed and applied hydraulically with equipment approved by the Engineer. The hydraulic application shall be such that the seed mixture is distributed at the rate of 5 pounds per 1,000 square feet and the Type III mulch is distributed at the rate of 46 pounds per 1,000 square feet. The seed mixture and Type III mulch shall be mixed with water in a manner to provide a homogeneous slurry. Equipment for mixing and applying the slurry shall be capable of applying a uniform mixture over the entire area to be mulched. The slurry mixture shall be agitated during application to keep the ingredients thoroughly mixed.

203.6. Maintenance Requirements. Since the seeded area shall be maintained by the Contractor as necessary to assure growth. A guarantee period not less than the correction period from the Final Acceptance of the work will be required. During the guarantee period, if there are deficient areas where the grass died, or where sheet and rill erosion or settlement occurred, or where gravel or other deleterious backfill material surfaces, upon notification by the City of such areas, the Contractor shall re-work all areas as necessary to bring the areas into conformance with the specifications.

203.7. Measurement and Payment. All costs pertaining to the seeding and mulching shall be paid by the Contract unit price per square yard or lump sum, complete in place. Payment shall be made under:

Item No. 203.1. Seeding and Mulching, per square yard or lump sum.

SECTION 204

SODDING

204.1. Description. This item shall consist of placing approved live sod on prepared areas, as indicated on the plans and specified herein, or as ordered by the Engineer.

204.2. Material. The sod shall be at least three (3) year-old densely rooted tall type fescue mix, or other approved native perennial grasses, free from noxious weeds. It shall be from a loam soil of such character that the sod will not break up or crumble during the operations of cutting, transporting, or laying. Sod from light sand and from heavy clay soils will not be acceptable. It shall be cut in strips or rolls of uniform thickness of one (1) inch to one and a fourth (1 1/4) inch. The sod strips shall contain at least one-half (1/2) square yard and not more than one (1) square yard. Sod strips shall not be cut less than twelve (12) inches in width or more than nine (9) feet in length.

204.3. Construction. The area to be sodded shall be brought to a smooth and uniform surface and shall have all clods, stones, sticks, and other debris which would be harmful to sod growth removed. The soil on the area to be sodded shall be loosened and brought to a reasonably fine texture, to a depth of at least four (4) inches. The sodbed shall be limed and fertilized according to the general recommendations of the Boone County Agriculture Extension Service.

The sod shall be moist and shall be placed on a moist earth bed. No dry sod may be used. The sod strips shall be laid along contour lines, by hand, commencing at the base of the area to be sodded and working upward or as directed by the Engineer. The transverse joints of sod strips shall be broken and the sod carefully laid to produce tight joints. The sod shall be firmed, watered and re-firmed immediately after it is placed. The firming shall be accomplished by use of a lawn roller, tamper, or any other method approved by the Engineer.

On 3 horizontal:1 vertical slopes, or steeper, the sod shall be nailed to the ground with sod staples or with plastic pegs approximately 1/2" x 1" x 12" driven into the ground, leaving about one-half (1/2) inch of the peg above the sod, and spaced not more than two (2) feet apart. Pegging of the sod shall be done immediately after the sod has been firmed.

After the pegging has been completed, the sodded areas shall be cleared of loose sod, excess soil, or other foreign material, and then a thin layer of topsoil (about one-fourth (1/4) inch deep) shall be scattered over the sod as a top-dressing and the areas shall then be thoroughly moistened by sprinkling with water.

Sod shall not be placed during a drought nor during the period from June 1 to September 1, unless authorized by the Engineer. Frozen sod shall not be used and no sod shall be placed on frozen ground.

The Contractor shall keep all sodded areas thoroughly moist for two (2) weeks after laying. This shall include watering at least once a day.

204.4. Method of Measurement. Measurement will be made to the nearest square yard of approved sodded surface area.

204.5. Basis of Payment. Payment for sodding will be made at the Contract unit price per square yard, complete in place. No direct payment will be made for liming or fertilizing sodded areas. Payment will be made under:

Item No. 204.1. Sodding, per square yard.

SECTION 205

SUBGRADE

205.1. Description. That portion of the graded roadbed upon which surfacing is to be placed is hereby designated as the subgrade. The subgrade shall be constructed so that it will be uniform in density throughout its entire width and will conform to the line, grade, and cross section shown on the plans or as established by the Engineer.

205.2. Finishing. After excavation and embankment has been completed the subgrade shall be brought to true shape and rolled. It shall then be tested with an approved template furnished by the Contractor. If the subgrade is not to the proper elevation, material shall be added or removed as required and if material is added it shall be compacted in a manner satisfactory to the Engineer.

The entire subgrade shall be proof rolled with a minimum of two passes of a fully loaded tandem axle dump truck (weigh ticket to be provided). Truck shall be operated at between 2 ½ to 5 miles per hour allowing the Engineer to walk alongside and observe results. Truck shall make passes to cover the entire subgrade under the proposed pavement. Proof roll shall be scheduled a minimum of 24 hours in advance and witnessed by the Engineer. There shall be minimal evidence of deflection (less than one inch), rutting, or pumping. If the Contractor disputes the result of the proof roll, the Contractor at his own expense may hire an independent geotechnical engineer licensed in the state of Missouri to witness the proof roll. The independent engineer must be agreed upon by the Engineer. The recommendations of the independent engineer shall be final. Proof roll shall be redone if there is rain or the subgrade is otherwise disturbed prior to placing the base course.

This process shall be repeated until all irregularities are removed. Extreme care shall be taken in shaping the subgrade, so that at no place will the completed pavement vary from the specified thickness. All soft and yielding spots shall be removed to a depth of not-to-exceed two (2) feet, and all vegetable substances or unsuitable material shall be removed, and the resulting spaces shall be refilled with approved material. All large rocks or boulders encountered shall be removed or broken off to a depth of not less than six (6) inches below the finished surface of the subgrade, and the space shall be refilled. The subgrade shall again be rolled until no depressions occur.

205.3. Restoring Subgrade to Acceptable Condition. If the subgrade is disturbed in any manner after the work, described in the preceding paragraph, has been completed, it shall be brought to an acceptable condition by reshaping and rolling, or with macadam. At the minimum, the top 6" of subgrade shall be scarified and recompacted. If required by the Engineer, the Contractor shall provide planking to protect the subgrade from disturbance.

205.4. Amount of Finished Subgrade. There shall be at all times at least fifty (50) feet of subgrade in the condition described in the preceding Articles numbered 205.2 and 205.3, ahead of the point at which concrete is being placed.

205.5. Payment. There will be no direct payment for finishing and restoring subgrade but the whole cost and expense of such work to the Contractor must be included by him in the price bid per cubic yard for excavation.

SECTION 206

DIG OUT REPAIR

206.1. Description. The work consists of saw cutting, removal of failed roadway and replacement. See Dig Out Repair detail.

206.2. Materials. Materials for base rock shall be Type 2 Aggregate Base. Geotextile fabric shall be Mirafi 600X or approved equal. Bituminous base shall be per section 226.

206.3. Installation. Saw cut area as directed by Engineer. Remove area to a minimum depth of 12" and compact subgrade. If unsuitable materials are encountered for the subgrade, material shall be removed and replaced with the same base and compacted in a maximum of 4" lifts. Place geotextile fabric over excavated area as per detail. Place Type 2 aggregate base in 6" lifts. Place bituminous base in equal lifts (3" maximum depth).

206.4. Measurement and Payment. All costs pertaining to the preparation and restoration of dig out repair shall be paid by the square yard as per the bid form. All work will be measured in the field for final quantities.

Item 206.1. Dig Out Repair, per square yard.

SECTION 207

ADJUSTMENTS OF MANHOLES, CATCH BASINS AND INLETS

207.1. Wherever specified on the plans, or as directed by the Engineer, manhole and catch basin frames and covers, catch basin stones and sills, and drop inlets shall be adjusted to new grades in accordance with the details shown on the plans. The quality of materials and workmanship shall be as specified in the applicable section of these specifications for each class of work necessary. Payment for adjustments, complete including excavating, backfilling, all materials, replacement of breakage caused by Contractor, equipment, labor and incidental expenses shall be completely covered by the unit prices bid per adjustment under:

Item No. 207.1. Adjusting manholes to grade, per each

Item No. 207.2. Adjusting catch basins or inlets to grade, per each

SECTION 208

REMOVALS

208.1. Description. Payment for the removal of pavement, sidewalk, curbing, fencing and retaining walls shall be made at the Contract unit prices for removal of each such item. Measurement shall be made of the actual quantities removed (as described hereinafter), the removal of which is shown on the drawings or authorized by the Engineer. Payment for removals shall include the demolition, removal and disposal of all debris which is a product of such demolition. Pay quantities shall not include any unauthorized removal due to damage during construction by the Contractor. Such damaged areas, where removal is not shown on the drawings, shall be removed and replaced at the Contractor's expense.

208.2. Removal of Pavement. This shall apply to all Portland cement concrete or asphaltic concrete surfaces six (6) inches or more in thickness. Measurement shall be based on the actual area removed in square yards. However, where pavement is removed solely to allow construction of a storm sewer or appurtenant structure, the removal shall be paid for to a width not to exceed the outside dimension of the pipe or structure plus twenty-four (24) inches. Payment will be made under:

Item No. 208.1. Removal of pavement, per square yard.

208.3. Removal of Driveway Pavement. This shall apply to all Portland cement concrete or asphaltic concrete driveways or other concrete slabs less than six (6) inches in thickness. Measurement shall be as described in Section 208.2 for the removal of pavement. Payment will be made under:

Item No. 208.2. Removal of driveway pavement, per square yard.

208.4. Removal of Sidewalks. This shall apply to all Portland cement concrete sidewalk. Measurement shall be as described in Section 208.2 for the removal of pavement. Payment will be made under:

Item No. 208.3. Removal of sidewalks, per square yard

208.5. Removal of Curbing. This shall apply to all Portland cement concrete curbs or curbs and gutters measured along the base of the curb face in lineal feet. Payment will be made under:

Item No. 208.4. Removal of curbs, per lineal foot
Item No. 208.5. Removal of curbs and gutters, per lineal foot.

208.6 Removal of Fencing. Work shall include all necessary material, equipment, and labor to remove, stockpile, and reinstall fencing displaced by construction activity. Owners should be notified 24 hours prior to fence work. The Contractor shall use care in removing only as much fence as is necessary to complete construction and grading. The Contractor shall take great care to carefully dismantle, stockpile and reinstall fence after the public sanitary sewer has been installed. The Contractor shall salvage and reuse as much of the fencing material as practical. If the fence material cannot be salvaged, then the Contractor shall provide new material

that is consistent with the fence material that was removed.

The Contractor shall install a suitable temporary fence along the temporary construction easement to protect livestock, pets or children as directed by the Engineer. No direct payment will be made for the temporary fence.

Payment for all costs to remove, stockpile and reinstall displaced by construction activity shall be included in the per linear foot price bid for fence removal and replacement and payment shall be based on the actual length of fence removed and replaced in linear feet. Payment will be made under:

Item No. 208.6. Fence removal and replacement, per linear foot.

208.7. Removal of Retaining Walls. Retaining walls of concrete, brick, or stone to be removed shall be measured in place and payment shall be based on the actual volume, in cubic yards, of material actually removed. Payment will be made under:

Item No. 208.7. Removal of retaining walls, per cubic yard

SECTION 209

DAILY CLEANUP AND FINAL TRIMMING AND CLEAN UP

209.1. Requirements. Daily cleanup shall follow the work progressively. The Contractor shall remove from the project site all rubbish, equipment, tools, surplus or discarded materials, and temporary construction items.

Streets to be opened to local traffic at the end of the day's operation shall be cleaned of dirt and mud. Streets which are not open to traffic shall be cleaned regularly to be kept free of dirt and mud. Street sweeping equipment shall capture and contain dust and debris. Powered broom attachments shall be of the pick-up type. All equipment and material stockpiles shall be secured for safe passage of vehicles and pedestrians. Traffic control in conformance with the Manual of Uniform Traffic Control Devices shall be in place prior to opening the road to traffic.

209.2. Final Trimming and Clean Up. Prior to the acceptance of the work done under this Contract all shoulders, slopes, ditches, if any, and sidewalk spaces shall be shaped, trimmed and made uniform, smooth and true to line, grade and cross section. All debris and rubbish resulting from the construction work or occurring within the limits of the improvement shall be disposed of before final acceptance will be made under this Contract.

209.3. Payment. There will be no direct payment for final trimming and cleaning up but the whole cost and expense of such work to the Contractor must be included by him in the other bid prices.

SECTION 210

AGGREGATE BASE MATERIAL

210.1. Type 1 Aggregate (Rolled Stone). Aggregate for Type 1 base shall be essentially limestone. The crushed stone shall not contain deleterious material such as shale or disintegrated stone in excess of fifteen percent (15%). Any silt, any clay, and any deleterious material shall be uniformly distributed throughout the mass. The aggregates shall conform to the following gradation requirement:

Passing 1 inch sieve	100%
Passing 1/2 inch sieve	60-90%
Passing No. 4 sieve	40-60%
Passing No. 40 sieve	15-35%

210.2. Type 2 Aggregate (Compacted Granular Base). Aggregate for Type 2 base shall consist of crushed stone, limestone screening, sand and gravel, sand, chat, sandstone, or combinations of these materials, with or without soil binder as may be required. The material shall conform to the following gradation requirements and in addition shall be so graded that it will readily compact to the specified density and withstand construction traffic without distortion and displacement.

Passing 1 1/2 inch sieve	100%
Passing No. 40 sieve	15-50%
Passing No. 200 sieve,	not more than 35%

210.3 Type 3 Aggregate (Drainable Base). Aggregate for Type 3 base shall consist of crushed stone or sand and gravel. The aggregate shall not contain more than fifteen percent (15%) deleterious rock and shale. If crushed stone is used, sand may be added only for the purpose of reducing the plasticity index of the fraction passing the No. 40 sieve in the finished product. The fraction passing the No. 40 sieve shall have a plasticity index not to exceed six. Any sand, silt and clay, and any deleterious rock and shale shall be uniformly distributed throughout the material. When sand and gravel aggregate are used, the fraction passing the No. 200 sieve shall be less than one half of that fraction passing the No. 30 sieve.

Sieve size	Passing (%)
1 inch	100
½ inch	60-90
No. 4	35-60
No. 30	10-35
No. 200	0-15

If flint chat or tiff chat is used, it shall meet the requirements of this section and in addition shall have at least twenty percent (20%) passing the No. 40 sieve.

Soil binder shall consist of soil or similar fine material with such cohesive properties as to impart the desired plasticity to the finished product.

SECTION 211

PENETRATION MACADAM BASE

211.1. Description. This section of the specifications shall consist of the construction of a penetration macadam base placed on a one (1) inch granular insulation course over a prepared subgrade and topped with a one (1) inch blotter course; conforming to the line, grade, thickness, and typical cross section shown on the plans. The base shall be constructed in two lifts of four inches each.

211.2. Material

a. Coarse stone shall consist of sound, durable particles of limestone or dolomite, and shall not contain deleterious material such as shale or disintegrated stone in excess of fifteen percent (15%). The crushed stone shall have a percent of wear not to exceed fifty percent (50%) when tested in accordance with AASHTO 96-58 (c) (Los Angeles Abrasion). It shall meet the following gradation requirements:

Passing 3 inch square sieve	100%
Passing 2 1/2 inch square sieve	90-100%
Passing 2 inch square sieve	35-70%
Passing 1 1/2 inch square sieve	0-15%
Passing 3/4 inch square sieve	0-5%

b. Material used in the insulation course shall be either coarse sand or coarse screening. Screening shall consist of tough, durable particles of crushed stone. Insulation material shall be free from dirt and other objectionable material.

c. Blotter course material shall be 1" clean crushed stone, free from dirt and other objectionable material and shall have the following gradation:

Passing 1 1/2" inch sieve	100%
Passing 3/4 inch sieve	0-5%

d. Binder shall be Performance Graded and conform to PG64-22.

211.3. Weighing. All materials shall be weighed on an accurate and reliable platform scale, approved by the Engineer, and each load must be accompanied by a signed weight ticket stating the gross, tare, and net weight, and no material shall be accepted by the City unless accompanied by such signed weight ticket.

211.4. Inspection. All materials and work shall be subject to inspection at all times by the Engineer, or his duly authorized representative, and no materials shall be delivered or accepted nor work performed without proper authorization of the Engineer. In order to assure the use of suitable materials, the Engineer shall have the right to make any inspections he may deem necessary, either at the plant of the Contractor, or his supplier, or on the job site.

The Engineer may at any time authorize the collection of samples of materials, from any

source he may direct, and subject them to tests provided for in these specifications, by a recognized reputable testing laboratory for determination of their quality and fitness for work under this Contract. The expense of such sampling and testing shall be borne by the City of Columbia. The Contractor shall provide such facilities as may be required for collecting samples.

211.5. Equipment. All equipment, tools, machinery and other appliances used in handling materials and performing any part of the work shall be subject to the approval of the Engineer before the work is started and whenever found unsatisfactory shall be changed and improved as required by the Engineer. All equipment, tools and machinery used must be maintained in satisfactory working condition.

Rollers and compactors shall include self-powered three (3) wheeled and tandem steel rollers and self-propelled pneumatic-tired rollers, weighing not less than seven (7) nor more than ten (10) tons, and multiple vibratory compactors of approved design.

Steel-wheeled rollers shall be equipped with scrapers to keep the surface of the wheels clean. All rollers and compactors shall be equipped with devices to wet the wheels, or contact surface, to prevent the material being compacted from sticking to them.

If multiple vibratory compactors are used, the standard of compaction to which each operation shall be subjected shall be determined by the Engineer based on the density obtained from seven (7) to ten (10) ton steel rollers under similar conditions in the City of Columbia.

211.6. Construction Methods

a. Preparing and Compacting Subgrade.

Prior to constructing the base, the prepared subgrade shall be adjusted to conform to the cross section shown on the plans, and to the lines and grades established by the Engineer. The subgrade shall be compacted as herein specified to the entire satisfaction of the Engineer. No direct payment will be made for adjusting and compacting the subgrade. The cost of such work to the Contractor must be included by him in the unit price bid for Penetration Macadam Base. No aggregate shall be spread on a muddy, excessively dusty, or frozen subgrade.

When no curb and gutter or side forms are used, well compacted shoulders with vertical face for the full depth of the course or layer shall be prepared in advance of spreading aggregate so as to permit the roller or compactor to lap the shoulder and edge of each course or layer of the pavement. The shoulder material shall be kept leveled at the proper elevation to avoid irregularities extending into the macadam.

b. Insulation Course. When the subgrade has been adjusted to true line and grade to the satisfaction of the Engineer, a blanket of insulation course material, as specified above, shall be spread on the subgrade and compacted to a minimum thickness of one (1) inch.

c. Spreading and Compacting Coarse Stone. When the base is constructed in two (2) or more courses, each course shall be spread in layers of equal thickness after compaction. Self-propelled spreading and leveling machines or approved spread boxes equipped with shoes

or runners of sufficient width and length to preclude any damage or displacement to the subgrade or lower base course shall be used for spreading coarse aggregate.

If the aggregate after being so spread and shaped does not have a uniform distribution of sizes throughout, or if it becomes mixed with dirt or other foreign substances it shall be harrowed with a heavy spike-tooth harrow, the teeth of which extend approximately six (6) inches below the frame and spaced that the aggregate will readily pass between them. If, after harrowing, there still remains areas of undersized or dirty aggregate, such aggregate shall be removed and replaced with clean aggregate of the proper size.

The coarse stone shall be rolled and/or compacted until it is well keyed and settlement has ceased. The surface shall then be checked transversely with a template cut to the required cross section, and longitudinally with a twenty (20) foot straightedge. Any indicated variations exceeding one-half (1/2) inch shall be corrected by the removal or addition of coarse stone as needed. Corrected areas shall be compacted and made to conform with the required grade and cross section.

Rolling shall start longitudinally beginning at the edges of the pavement and shall proceed on each side toward the center of the pavement overlapping on successive trips by at least one-half (1/2) of the width of rear wheel on steel rollers, one (1) wheel on pneumatic-tired rollers, and one (1) unit on vibratory compactors. Places inaccessible to roller shall be compacted by mechanical or hand tamping as approved by the Engineer.

Should subgrade become soft and mixed into or through the macadam, the Contractor shall remove the mixture, reshape and correct the subgrade, replace the removed macadam materials in compliance with this specification. The corrected areas shall conform with the required grade and cross section.

The completed penetration macadam base shall have a total compacted thickness as shown on the plans.

The surface shall not vary more than one-half (1/2) inch from a twenty (20) foot straightedge applied to the surface parallel to the center line of the pavement. Areas of the pavement which show more than the allowable variation shall be loosened and reconstructed in accordance with these specifications and to the complete satisfaction of the Engineer.

d. Application of Binder. Hot binder, as specified hereinbefore, shall be applied on each course of rolled base at the uniform rate of one (1) gallon per square yard per lift at application temperature with an allowable tolerance of plus or minus 0.10 gallon per square yard. Every precaution shall be used to avoid lapping either along the edges or at the ends of successive application runs.

e. Spreading and Compacting Succeeding Courses of Base Aggregate. Succeeding course of base aggregate shall be spread, compacted and finished in the same manner and to the same tolerances as hereinbefore specified for the first course.

f. Blotter Course. Immediately after the asphaltic cement has been applied to the final course of the base aggregate and while it is yet warm, a blotter course of crushed rock, as

specified hereinbefore, shall be spread over the surface in just sufficient quantity to fill the surface interstices. This stone shall be spread by means of an approved mechanical spreader at the rate of not more than twenty-five (25) pounds per square yard. Any cover material remaining unbounded on the pavement shall be swept up and removed. The top surface of the asphalt coated coarse stone of the final base course shall be exposed upon completion of the cleaning operation to provide a secure bond for the asphaltic concrete surface course to follow.

211.7. Basis of Measurement.

Method No. 1	Penetration macadam base shall be measured to the nearest square yard in place.
Method No. 2	Coarse stone, the blotter course, and the insulation course shall be measured on a tonnage basis of two thousand (2000) pounds.

The binder shall be measured to the nearest ten (10) gallons.

211.8. Basis of Payment. The quantities, complete in place and accepted, will be paid for at the applicable Contract unit price, which payment shall be full compensation for preparation of subgrade, furnishing, hauling and placing all materials, rolling equipment, tools, labor and work incidental thereto. Payment will be made under:

Method No. 1	Item No. 211 Penetration macadam base, per square yard.
Method No. 2	Item No. 211.1. Coarse stone, per ton. Item No. 211.2. Insulation course, per ton. Item No. 211.3. Blotter course, per ton. Item No. 211.4. Binder, per gallon.

SECTION 212

AGGREGATE BASE

212.1. Description. Aggregate base shall consist of a uniform mixture of properly graded materials placed on a prepared subgrade as shown on the plans. The type of aggregate used shall be as specified in the Contract.

212.2. Materials.

a. Aggregate base materials shall conform to the following:

	Section
Type 1 Aggregate (Rolled Stone)	210.1
Type 2 Aggregate (Compacted Granular Base)	210.2
Type 3 Aggregate (Drainable Base)	210.3

b. Water shall be potable, clean and free from acid, salt, oil and other organic matter. The use of City water is preferred.

212.3. Equipment

a. Mixing Equipment. Equipment for producing mixture shall be an approved stabilization pugmill, which will uniformly mix the water with the aggregate in such manner as to avoid undue segregation.

b. Construction Equipment. Equipment for this work shall consist of blade or motor patrol graders, self-powered steel wheeled rollers, self-propelled pneumatic-tired rollers, vibratory compactors, sprinklers, or any other suitable equipment required to properly complete the work.

The Contractor shall furnish all equipment, tools, machinery and other appliances, which in the opinion of the Engineer, are necessary for handling materials and performing any part of the work.

All equipment shall be subject to the approval of the Engineer before the work is started, and wherever found unsatisfactory, shall be changed and/or improved as required by the Engineer. All equipment, tools and machinery must be maintained in satisfactory working condition.

212.4. Preparation of Mixture. Base material, any additional material required, and water in an amount sufficient to ensure the desired compaction shall be thoroughly mixed and delivered to the construction site as a combined product. Excess moisture resulting in run-off shall be avoided. The final product of base material mixed with binder shall meet the specified gradation and plasticity index (P.I.). If necessary for satisfactory work, the mixture or subgrade or both shall be allowed to dry to a moisture content which will permit proper compacting.

212.5. Construction Procedure.

a. Subgrade. All work on any section of the subgrade on which the base is to be constructed shall be completed prior to the placing of any base material on that section. Immediately before spreading the mixture, the subgrade shall be sprinkled as specified by the Engineer.

b. Spreading, Shaping and Compacting. In no case will the Contractor be permitted to place the mixture or manipulate it on muddy or frozen subgrade. Also, any mixture containing frost or frozen particles shall not be placed on the subgrade or compacted. After the subgrade has been properly prepared, the mixture shall be uniformly spread by blades, or other approved equipment, in successive layers of courses to such depth that, when compacted, the base will have the minimum thickness shown on the typical cross section. The Contractor may construct the base in any number of layers which he may find convenient to facilitate compacting, except that, in no case, shall any individual layer have a compacted thickness of more than four (4) inches, provided however when vibrating equipment is used, the base may be constructed in one (1) course (not exceeding six (6) inches), provided the equipment used proves capable of compacting the base in accordance with these specifications. Each layer shall be compacted as hereinafter specified before any succeeding layer is placed. Except as otherwise permitted by the Engineer, the first course placed upon the subgrade shall be compacted and allowed to become firm before any subsequent course is constructed.

If, in the opinion of the Engineer, the mixture becomes too dry to permit compaction, water shall be added during the compacting operations in such an amount as to ensure proper compaction. If, for any reason, the mixture is too wet for proper compaction it shall be allowed to dry until the proper moisture content is obtained.

The mixture shall be handled in such manner as to avoid undue segregation. If segregation occurs, or, if the mixture becomes contaminated, such segregated or contaminated materials shall be removed and replaced with materials of suitable quality and gradation, except that areas of surface segregation may be corrected by spreading a quantity of limestone screening sufficient to close the voids and bind the loose material firmly in place. The screenings shall be wet and rolled so as to create a dense and uniform surface. Segregated or contaminated materials which the Engineer orders removed, shall be removed and replaced with suitable material at the sole expense of the Contractor. The Engineer may restrict hauling over the completed or partially completed work after inclement weather, or at any time when the subgrade is soft and there is tendency for the subgrade material to work into the surface material. Any screenings used in correcting areas of surface segregation will be measured and paid for as part of the aggregate constituting the base course. All extra work or expense involved due to screenings being required shall be the Contractor's obligation without extra cost to the City. Compaction shall be performed by the use of any approved equipment within the limits of these specifications, which will produce satisfactory results.

Shaping and compaction shall be carried on until a true, even, uniform base course of the proper grade, cross section and density is obtained. Proper moisture content shall be maintained by wetting the surface as required during shaping and compacting operations. The use of excess water, resulting in run-off or in the formation of a slurry on the surface shall be avoided.

Final rolling on the top course of multiple-course construction or on single-course construction shall be accomplished by a self-propelled smooth-wheeled roller weighing not less than seven (7) tons, nor more than ten (10) tons.

The base course shall be graded, compacted and rolled to ensure maximum density to the exact cross section and elevations and shall be tested with an approved template before concreting. High areas shall be reduced to grade and low areas raised to grade with approved material compacted in place, as directed.

Type 1, Type 2, and Type 3 aggregates used for shoulders adjacent to Portland cement concrete pavement shall be compacted to not less than ninety-five percent (95%) of standard maximum density. Type 1, Type 2, and Type 3 aggregate for use on other than shoulders adjacent to Portland cement concrete pavement shall not be compacted to less than standard maximum density.

c. Standard Compaction Test. The standard compaction test will be made in accordance with ASTM D 698-70, Method C, using the total material. Field density and moisture will be determined in accordance with ASTM D 6938 Test Methods for In-Place Density and Water Content of Soil and Soil-Aggregate by Nuclear Methods (Shallow Depth). Frequency of testing shall conform to the table below:

Tested Property	Test Method	Contractor Frequency
Density	AASHTO T 191 or AASHTO T 310	1 per 1000 tons, minimum of 1 per day
Thickness	Applicable method meeting Engineer's approval	1 per 1000 tons, minimum of 1 per day
Gradation and Deleterious Material[a]	AASHTO T 11, AASHTO T 27 and MoDOT Test Method TM 71	1 per 2000 tons, minimum of 1 per day
Plasticity Index[a]	AASHTO T 89 and AASHTO T 90	1 per 10,000 tons, minimum of 1 per project

[a]Sampled at point of delivery, prior to rolling.

d. Curing and Maintenance of Aggregate Base. Allow the aggregate base to cure before any heavy equipment is allowed on the aggregate base. Curing of aggregate base is complete when the moisture content is a maximum of 60% of the optimum moisture content. The Contractor will perform testing to determine when the cure of the aggregate base is complete. The Engineer may require that the surface of the aggregate base be kept moist during

the curing period to prevent loss of surface material.

Do not apply surfacing until the aggregate base is cured. Maintain the base until the surfacing is applied.

e. Maintenance. When the base is to be constructed in more than one (1) layer, the Contractor shall maintain the underlying layers by wetting or drying, blading and rolling in a manner satisfactory to the Engineer until the next layer is completed. This maintenance shall be entirely at the Contractor's expense. If a prime coat is specified in the Contract, the Contractor will be required to apply the prime coat on any completed portion of the base as soon as practicable, but he will not be permitted to prime or to construct a bituminous surface course when the moisture content of the top two (2) inches of the base is more than two-thirds (2/3) of the optimum moisture.

If the Contract includes the construction of Portland cement concrete pavement, the Contractor will be required to maintain the completed base until the pavement is placed. The base shall be considered complete when it has the required density with a uniform surface of the proper grade and final template section. Lateral ditches shall be constructed through shoulders where possible to ensure adequate surface drainage.

212.6. Method of Measurement.

a. Aggregate base material shall be measured on a tonnage basis of two thousand (2,000) pounds, including water. Accurate and reliable platform scales, approved by the Engineer, shall be used. Materials, when delivered to the construction site, must be accompanied by a signed weight ticket, stating the gross, tare and net weight, and no material shall be accepted by the City unless accompanied by such signed weight ticket.

b. Water. Payment for all necessary water used in sprinkling the subgrade and added in constructing and maintaining all portions of the completed base shall be completely covered by the unit prices bid for other items in the Contract.

212.7. Basis of Payment.

a. Payment for aggregate base material complete in place will be made at the Contract unit price per ton, which price shall include furnishing all materials, mixing, loading, hauling, unloading, spreading, shaping and compacting, water for sprinkling subgrade and added in constructing and maintaining base, and all tools, labor, equipment, and work incidental thereto.

b Payment will be made under:

Item No. 212.1. Type 1 aggregate for base, per ton
Item No. 212.2. Type 2 aggregate for base, per ton
Item No. 212.3. Type 3 aggregate for base, per ton

SECTION 213

LANDSCAPING AND TREE PROTECTION

213.1. Description. This work shall consist of furnishing, planting and providing a warranty for all trees and shrubs in accordance with the plans. Work shall be done under the supervision of an experienced landscaper or experienced arborist approved by the Engineer.

213.2. Materials

a. Plant Materials.

1. Plant Materials shall mean trees and shrubs of all descriptions, required to be furnished for the project in accordance with the specifications on the approved plans. The source of supply of all plant material shall be given in writing to the Engineer. The Engineer must be given the opportunity of inspecting and approving all plant materials before planting takes place.

2. Plant materials shall comply with State and Federal laws relating to inspection for disease, insect infestation and shipping and handling requirements.

3. Plant substitutions, including species cultivars, will not be permitted unless pre-approved by the Engineer. If proof is submitted that specific plants or sizes are unobtainable, proposals will be considered for the nearest equivalent size or variety of equal value.

4. Type and quality:

i. Plant materials shall conform to the size and proportion standards of the American Standard for Nursery Stock (ANSI Z60.1). ANSI stock specifications will be provided by the Engineer. All tree stock shall be single stem unless specified. The International Code of Nomenclature for Cultivated Plants shall be the authority for plant names.

ii. Plants will be true to type and subject to inspection for quality, size and color. Plants lacking compactness, proper proportion, or having multiple leaders will not be accepted. Plant materials which have been cut back from larger grades to meet certain specified requirements will be rejected.

iii. Plants shall have a normal, well-developed branch structure and a vigorous fibrous root system. Plants shall be healthy and vigorous. Plants shall be free from defects, wood decay, sun-scald injuries, abrasions of the bark, galls, insect pest eggs, borers and all forms of infestations and other plant diseases, and free from objectionable disfigurements. Tree root collars must be visible above, or at, soil level and the root system shall not contain any 'circling' or 'diving' roots.

iv. Plants shall be nursery grown unless otherwise specifically permitted in each instance and shall have been growing under similar climatic conditions as occurs in the City of Columbia for at least 2 years prior to award date of this Contract.

v. All plants shall be freshly dug within 1 week of delivery and provided from the most recent favorable harvest season.

vi. The City reserves the right to reject any plant material that is considered unsatisfactory.

b. Topsoil.

Topsoil shall be per section 203.4.a.

c. Wood Bark Mulch.

Mulch for plant bed and tree pits shall consist of a high quality shredded bark or wood chips free from noxious substances. The source of the wood bark mulch and a representative sample shall be approved by the Engineer prior to application.

d. Water.

Water shall be potable and suitable for irrigation, clear and free from any material that may be harmful to plant life.

213.3. Installation. Specifications for Planting Procedures.

a. Planting Season

1. Planting shall be done within the appropriate planting season. If associated with construction projects, planting projects should take place within the planting season following completion of construction. Dates for planting are: from April 1 to May 15 and October 15 to December 15.

2. If special conditions exist, which may warrant a variance in the above planting dates, a written request shall be submitted to the Engineer stating the special conditions and the proposed variance. Permission for the variance will be given if, in the opinion of the Engineer, the variance is warranted.

3. When conditions are such, by reason of drought, high winds, excessive moisture, or other similar factors, that satisfactory results are not likely to be obtained, work shall be stopped. It shall not be resumed until desired results can be obtained or until approved alternate or corrective measures and procedures are adopted.

4. On no account shall planting take place when the ground is frozen.

b. Planting Locations.

1. General. The Contractor shall be responsible for planting at correct grades, alignment and location. If the planting plans provided differ from ground marked sites, the Contractor will seek guidance from the Engineer.

2. Engineer will stake out, or flag the ground locations for plants.

c. Excavation of Planting Areas.

1. Care. No plant pits shall be dug or prepared until their location is approved by Engineer. Reasonable care shall be exercised in having pits dug and soil prepared prior to moving plants to their respective locations for planting to ensure that they will not be unnecessarily exposed to drying elements or to physical damage.

2. Holes for trees and shrubs either, balled and burlapped (B&B) or bare root (B&R) (except for hedge and plants specifically designated on the plans to be planted in a bed) shall be excavated or augered to provide a planting hole a minimum of 100% larger than the spread of the ball or roots. All mechanically dug pits shall be scarified to remove glazing, and shall have a saucer shaped profile.

3. The depth of plant pits shall be the depth below finished grade required to allow the plant to be set on undisturbed soil where the root collar will be at or slightly above grade. In certain clay soils, descriptions to be jointly agreed by Engineer, or where surface or sub-surface conditions prevent digging a tree pit to specified dimensions, the plant can be set 4 to 6 inches high. In such cases the upper rootball edge must be bermed to grade with topsoil at no greater than a 3:1 slope

4. If pits have been excavated and not planted they must be made safe from public hazard at the end of each working day.

d. Delivery and Temporary Storage.

1. All plant material will be covered during transport between the nursery and the planting site – no matter the time of year. Insofar as is practicable, plant material shall be planted on the day of delivery. In the event this is not possible the Contractor shall protect that stock not planted.

2. Protect plants at all times from sun or drying winds. Plants that cannot be planted immediately on delivery shall be kept in the shade, well protected with soil, wet moss or other acceptable material and shall be kept well watered. Plants shall not remain unplanted for longer than three days after delivery.

3. Plants shall not be bound with wire or rope at any time so as to damage the bark or break branches. Plants shall be lifted and handled from the bottom of the

ball only.

4. Plants moved with a ball will not be accepted if the ball is cracked or broken before or during planting operations.

e. Planting

1. All planting of balled and burlapped (B&B) or containerized plants, unless otherwise directed, shall be performed as herein specified. All plants shall be centered in the planting hole and set plumb vertical.

2. B&B plants shall be placed in their wrapped ball on undisturbed soil so that the root collar is standing at or slightly above the permanent grade or per 213.3.3.c above. All burlap, binding, and caging material shall be removed from the top one-third of the rootball.

3. The plant hole shall be backfilled with topsoil placed in layers around the roots or ball. Each layer shall be carefully tamped in place in a manner to avoid injury to the roots or ball or disturbing the position of the plant. When approximately two-thirds of the plant hole has been backfilled, the hole shall be filled with water and the soil allowed to settle around the roots. After the water has been absorbed, the plant hole shall be filled with topsoil and tamped lightly to grade. Any settlement shall be brought to grade with topsoil.

4. For containerized shrub and small tree plantings special care should be taken in ensuring that no circling or diving roots exist in the outer portion of the rootball. If they exist they must be removed before planting. Plants should be placed so that the root collar is level or just above existing grade. A generous sprinkling (approximately one pound) of raw bone meal shall be placed on soil after planting around each shrub and well raked in before applying mulch. All twine or labeling encircling the stem or roots shall be removed during planting regardless of material composition. All trees and small shrubs will be fully watered in after installation.

5. On all slopes except minor ones, soil mix shall be formed into an adequate dam or shoulder on downhill side to catch and hold water and avoid erosion and slope on uphill side shall be properly re-graded to satisfaction of Engineer.

6. No plant material will be approved by the Engineer unless the root collar or flare is clearly visible after planting.

f. Weeding & Mulching. The area required to be mulched shall first be cleared of all weeds and groundcover. All trees and shrubs shall be mulched to a depth of at least 3". A mulch ring will be provided that extends to a minimum radius of 3 feet from the stem of the tree or shrub. In all cases the mulch itself should be kept clear of the plant stem, leaving clear visual access to the root collar of the plant.

g. Watering. After raking the surface of the mulch smooth the tree should be given a

final 'watering in'. This should include soaking the full depth of the mulch thoroughly with water.

h. Guying, Staking and Wrapping.

1. Guying. Trees shall be supported immediately after planting. All trees shall be staked unless otherwise agreed with Engineer. Guying material will be fabric or flexible rubber or a combination of both. No wire or encased wire shall be used.

2. Staking. A minimum of two metal T-posts (at least 6' in length unless otherwise specified) placed at the opposite sides of the tree shall be driven vertically into the ground to a depth of 2 1/2 to 3 feet in such manner as not to injure the ball or roots. If trees are planted along a highway, the stakes shall be aligned along the axis of the highway, unless otherwise agreed.

3. Wrapping. Wrapping of the trunk is required only on dogwood and maple trees. Wrapping shall consist of a cardboard or plastic sleeve unless otherwise specified by the Engineer. The Engineer will manage the sleeve material after installation.

i. Pruning and Repair.

1. After planting an inspection of all plantings shall be made and all dead, dying or injured twigs and branches shall be removed. No further pruning shall be permitted unless approved by Engineer. All cuts shall be made without damaging the remaining tissue, and leaving no stubs.

2. Each tree and shrub shall be pruned in accordance with standard horticultural practice to preserve the natural character of plant. Pruning shall be done with clean, sharp tools that have been designed for pruning woody plants.

3. The bruised or broken parts of large or fleshy roots shall be cut off smooth before planting. If nursery practice has left bruised, broken, girdling or upward pointing roots above the root collar, these roots should be carefully removed without damaging the tissue to remain.

213.4. Cleanup and Completion of the Project.

a. During the course of planting, excess and waste materials shall be continuously and promptly removed, lawn areas kept clear and all reasonable precautions taken to avoid damage to existing structures, plants, and grass.

b. When planting in an area has been completed, the area shall be thoroughly cleaned up. Debris, rubbish, subsoil and waste materials shall be cleaned up and removed.

c. On completion of the project the Contractor shall be responsible for repairing tire ruts and other damage to existing landscaped areas. Lawn areas shall be left free from

compaction and restored to an even grade. All areas disturbed during planting activity will be seeded and mulched as required. The entire area, when completed, shall be neat and clean to the satisfaction of the property owner.

d. The Contractor will inform the Engineer when the entire project is complete. Engineer and the landscape Contractor will then perform an inspection of all the planting material and planting sites before final completion is accepted.

213.5. Warranty Procedure.

a. Proving Period. A proving period shall follow the completion of the planting project and it shall be for a period of one year from the installation of the last plant item. All replacements shall have a one year proving period from the date of installation.

b. Acceptance and Replacement of Plant Material. At the expiration of the proving period an inspection of the planting will be made and only those plants that are alive and in a healthy condition will be accepted. Unacceptable material shall be removed and replaced by the Contractor at his own expense, during the next appropriate planting season. Plant material and method of replacement planting shall be the same as specified for the original planting unless otherwise agreed with the Engineer. The Contractor shall continue to install replacement materials until the plants shows healthy growth for a period of one year from the date of planting. All such replacements will be inspected for acceptance at the end of the proving period.

213.6. Payment. Payment for the accepted quantities of plants will be made at the Contract unit price for each plant of the types, species, and sizes required complete and in place. No direct payment will be made for any incidental items such as supporting posts, hardwood mulch for tree ring, peat moss, and water necessary for this work. Hardwood mulch for traffic calming islands will be paid at the per square yard price for hardwood mulch.

Item No. 213.1. Landscaping, per plant.
Item No. 213.2. Hardwood Mulch, per square yard.

SECTION 214

TREE PROTECTION AND REMOVAL

214.1. General. All work shall include all necessary material, equipment and labor to remove, dispose and protect trees, bushes and shrubs necessary to complete the work outline on the construction plans and in the Contract documents.

214.2. Removal. All trees, bushes and shrubs located within the temporary construction easement that are not specifically noted as "Do Not Disturb" or "Do Not Remove", can be removed only if necessary to facilitate construction and approved by the Engineer or as directed by the Engineer. Check the plan sheets for trees and shrubs specifically noted as "Do Not Disturb" or "Do Not Remove." The Contractor shall use care to minimize the impact to and the removal of trees within the Temporary Construction Easement. All removals shall extend to a depth of at least 24 inches below the ground line in fill areas or 24 inches below the subgrade in cut areas, unless specifically directed otherwise.

214.3. Disposal. Contractor is responsible for disposing of all trees, bushes, shrubs, etc. that are removed as part of this project.

214.4. Tree Protection Fence. Contractor shall install tree protection fence at locations indicated on the construction plans or when directed by Engineer. Tree protection fence shall be constructed in accordance with the detail shown on the construction plans.

214.5. Basis of Payment. Payment for all costs to install, maintain, and remove the tree protection fence upon completion of the project shall be included in the per linear foot price bid for tree protection fence.

Item No. 214.5. Tree protection fence, per linear foot.

SECTION 215

MOBILIZATION

215.1. General. This item shall consist of preparatory work and operations, including, but not limited to, those necessary for the movement of personnel, equipment, supplies, and incidentals to the project site; for the establishment of all offices, buildings, and other facilities necessary for work on the project except as provided in the Contract as separate bid items; and for all other work and operations which must be performed or costs incurred prior to beginning construction.

215.2. Basis of Payment

a. Payment for all materials and work required shall be included in the mobilization item which will include the cost of all items herein described. The Contract lump sum price for this item shall be payable to the Contractor as specified in accordance with the following schedule of partial payments.

b. Forty percent (40%) of the Contract lump sum amount bid for mobilization will be released to the Contractor with the first monthly payment, but not sooner than 15 days after the Notice to Proceed has been issued.

c. An additional twenty-five percent (25%) of the Contract lump sum bid for mobilization will be released with the first monthly payment after fifty percent (50%) of the original total Contract amount, including payments for delivered materials but excluding Mobilization, has been paid out.

d. Upon completion the project, payment of the remaining thirty-five percent (35%) of the Contract lump sum bid for mobilization will be released upon the project final acceptance.

Item No. 215.1. Mobilization, lump sum.

SECTION 216

CONSTRUCTION STAKING

216.1. General. All construction work shall be done to the lines, slopes, grades and locations shown on the Plans or as modified by the Engineer in writing. The Engineer will establish on the Drawings the required control points, survey lines, benchmarks and base lines. Detailed survey and staking for construction, as well as measurements and elevations within structures shall be the responsibility of the Contractor. All work under this section shall be conducted by or under the direct supervision of a Registered Land Surveyor in the State of Missouri. The Contractor shall erect all necessary batterboards and shall furnish all templates necessary for the construction. Any work done without being properly staked, located and measured may be ordered removed and replaced at the Contractor's expense.

216.2. Control. On City projects, the Engineer will be responsible for providing all necessary horizontal and vertical control from which the Contractor may establish construction staking required to perform his work. The established control points are noted on the plans and shall become the responsibility of the Contractor once initially set. The Contractor shall use care not to disturb these points. Any cost required to re-establish these points, due to the careless or negligent destruction by the Contractor, may be charged to the Contractor and deducted from the payment for this work.

216.3. Construction stakeout by Contractor. The Contractor shall furnish all employees, equipment, tools, stakes and other material required and shall stake out, in a manner satisfactory to the Engineer, the following:

a. Slope stakes and offset grade stakes for curb and gutter, storm sewers, paved channels, inlets, manholes, and retaining walls.

b. Centerline grade stakes for unlined channels and pavement.

c. Any staking of rights of way and easements deemed necessary by the Engineer.

d. Re-staking of items staked when stakes are lost or destroyed for any reason.

e. "Blue top" hubs set to elevation of subgrade for centerline of streets and trails at such other locations as to assure proper thickness and drainage of pavements.

f. Pavement elevation points as required for asphaltic concrete fills, erected string lines and grading of drainage valleys in pavements.

g. Stakes for fencing and other stakes required for the proper construction of the Work.

h. Driveways and walks.

i. Any additional staking needed to construct the project according to the plans and specifications.

216.4. Notification. The Contractor shall not cover any work which requires measurements for payment while in the uncovered state until the Engineer has made such measurements.

216.5. Payment. Payment for all work and materials under this section shall be included in the 'lump sum' bid price for construction staking.

Item No. 216.1. Construction staking, lump sum.

SECTION 220

BITUMINOUS MATERIALS

220.1. General. Approval of the source of bituminous material. For all bituminous construction the Contractor shall obtain from the Engineer written approval of the sources of bituminous materials. Such approval shall be obtained before any shipments are started. The Contractor shall submit written evidence to the Engineer that all bituminous materials used conform to the requirements of Section 220.1 through Section 220.3.

220.2. Measurement of Liquid Bituminous Material. The Contractor shall submit to the Engineer, invoices in triplicate on all shipments of bituminous materials. The following volume correction methods, where applicable, shall be used for determining the volume of bituminous materials mentioned in these specifications.

220.2.1. Liquid Bituminous Material and Asphalt Binder - Volumetric Determination. Measurement of the material will be based on the volume at 60°F. The volume correction factors of ASTM D 1250, Table 24b, will be used for converting the material from the volume at the observed temperature to the volume at 60°F. The volume of uncalibrated distributors and tank trucks will be determined from the net weight of the material. The net weight will be determined from the gross weight of the loaded delivery vehicle less the empty delivery vehicle weight. For computing the volume in gallons from weight, the following formula will be used:

ENGLISH

$$G = \frac{W}{SG \times 8.328}$$

where:
G = Volume in gallons at 60°F.
W = Weight of material in pounds.
SG = Specific Gravity of material at 60°F.

220.2.2. Emulsified Asphalt. Measurement of the material will be based on the volume at 60°F using a coefficient of expansion of 0.0003 per degree F for converting the material from the volume at the observed temperature to the volume at 60°F.

220.3. Performance Graded Asphalt Binder. Performance graded asphalt binder shall be an asphalt-based binder produced from petroleum residue either with or without the addition of non-particulate organic modifiers. The grade shall be as specified in the Contract. Suppliers furnishing performance graded asphalt binders shall be certified by MoDOT.

220.4. Application Temperatures for Bituminous Materials:

ASPHALTIC MATERIAL	TEMPERATURE DEGREES FAHRENHEIT			
	SPRAYING		MIXING	
	MIN	MAX	MIN	MAX
X00-300 Penetration Asphalt	260	325	200	275
All other Penetration Asphalt	285	350	275	325
Performance Graded 64-22	260	325	---	---
All Other Performance Graded Asphalt	285	350	275	350
RC-0	65	135	50	120
RC-1	110	180	80	125
RC-2	140	210	80	150
RC-3	170	240	125	175
RC-4	180	255	150	200
RC-5	215	285	175	225
MC-0	70	140	50	120
MC-1	110	185	80	150
MC-2	140	215	100	200
MC-3	175	250	150	200
MC-4	190	265	175	225
MC-5	220	290	200	250
SC-1	110	185	80	200
SC-2	140	215	150	200
SC-3	175	250	175	250
SC-4	190	265	175	250
SC-5	220	290	200	275
EMULSIONS				
RS-1	75	130	---	---
RS-2	110	160	---	---
RS-3	100	160	100	160
SS-1	75	130	75	130
REFINED TARS				
RT-1,2	60	125	---	---
RT-3,4,5,6	80	150	80	150
RT-7,8,9	150	225	150	225
RT-10,11,12	175	250	175	250

220.5. Asphalt Cement Price Index. Adjustments will be made to the payments due the Contractor for any plant mix bituminous base, plant mix bituminous pavement, plant mix bituminous surface leveling and asphaltic concrete pavement that contains PG64-22, PG 70-22 or PG76-22 when it has been determined that the monthly average price for the midpoint of the published prices of PG64-22 for St. Louis, Missouri area and Kansas City area has fluctuated from the monthly average price of the month the project was bid. The St. Louis, Missouri area and Kansas City area prices will be obtained from the Asphalt Weekly Monitor® published by Poten & Partners Inc. The monthly base price will be the price from the last published Asphalt Weekly Monitor® prior to the City bid opening. The monthly base price shall apply to payment estimates for the following month.

220.5.1. The adjusted Contract unit price will be applied to the actual amount of asphalt binder used by the Contractor for all asphalt items that are set up by the wet ton mix. The adjustments will be applied to projects that have a quantity of asphalt wet ton mix pay items over 100 tons. The percentage of virgin asphalt as shown in the job mix formula will be the basis for adjustments for any asphalt mix type placed on the project during the monthly index period. The effective asphalt obtained from the use of recycled asphalt pavement (RAP) will not be eligible for adjustment. The base price index for PG64-22 will be applied to the asphalt mix for mixes using PG64-22, PG70-22 or PG76-22.

220.5.2. Basis of Payment. To determine the adjustment for any material specified in this provision the following formula will be used.

$$A = (B \times C) \times (D - E)$$

Where:
A = Adjustment for mix placed during monthly average index period
B = Tons of mix placed during the monthly average index period
C = % of virgin asphalt binder as listed in the job mix formula in use
D = Monthly average price at time of mix placement
E = Monthly average price at time of bid

220.5.3. The Engineer will make adjustment payments, as defined above, for the applicable work completed during each month except for projects on which the Contractor is being charged liquidated damages, due to working beyond the project completion date. In this case, the "D" value used for the price adjustment will be either the last "D" value prior to the date that liquidated damage assessment began or the current monthly "D" value, whichever is lower. If the Contractor is being charged liquidated damages due to the Contract being beyond the project completion date and the current months "D" value results in a deduction, then the current monthly "D" value will be used.

220.5.4. Optional. This provision is optional. If the bidder wishes to be bound by this provision, the bidder shall execute the acceptance form in the Bid. Failure by the bidder to execute the acceptance form will be interpreted to mean election to not participate in the Asphalt Cement Price Index.

SECTION 221

AGGREGATE FOR ASPHALTIC CONCRETE

221.1. Coarse Aggregate. All coarse aggregate shall consist of sound, durable rock, free from objectionable coatings. When the coarse aggregate is tested in accordance with AASHTO T 96-58 (c) (Los Angeles Abrasion), the percentage of wear shall not exceed fifty-five percent (55%) unless otherwise permitted by the Engineer. The percentage of deleterious substances shall not exceed the following values and the sum of percentages of all deleterious substances shall not exceed eight percent (8%).

Deleterious Rock	8.0%
Shale/Mud Balls Combined	2.0%
Other Foreign Material	0.5%

221.1.1. Gravel aggregate shall be washed sufficiently to remove any objectionable coating.

221.1.2. The above requirements apply to each size or fraction of aggregate produced.

221.1.3. Pile-run chat, defined as tailings from mills in which metallic minerals are recovered, will not be approved for use in asphaltic concrete unless the chat has been conditioned to meet a specified gradation. A tolerance of seven percent (7%) plus or minus, on each sieve fraction will be permitted provided the aggregate complies with other provisions of this specification.

221.2. Fine Aggregate. Fine aggregate for asphaltic concrete shall be a fine, granular material passing the 3/8-inch sieve naturally produced by the disintegration of rock of a siliceous nature. Fine aggregate shall be free from cemented or conglomerated lumps and shall not have any coating or injurious material. The percentage of deleterious substances shall not exceed the following values:

Clay lumps and shale	1.0%
Total lightweight particles (Including coal and lignite)	0.5%
Other deleterious substances	0.1%

221.3. Mineral Filler. Mineral filler shall consist of stone dust, Portland cement, or other artificially or naturally powdered mineral dust approved by the Engineer. It shall be free from foreign or other objectionable material, and shall meet the following gradation requirements:

Passing No. 30 sieve	100%
Passing No. 200 sieve	75-100%
Passing 325 sieve, not less than	30%

221.4 Recycled Asphalt Pavement (RAP) may be used in any mixture except SMA mixtures. A maximum of 30 percent may be used in mixtures without changing the grade of binder. Mixtures may be used with more than 20 percent RAP provided testing according to AASHTO M 323 is included with the job mix formula that ensures the combined binder meets the grade specified in the Contract. All RAP material, except as noted below, shall be tested in accordance with AASHTO TP 58, *Method of Resistance of Coarse Aggregate Degradation by Abrasion in the Micro-Deval Apparatus.* Aggregate shall have the asphalt coating removed either by extraction or binder ignition. The material shall be tested in the Micro-Deval apparatus at a frequency of once per 1,500 tons. The percent loss shall not exceed the Micro-Deval loss of the combined virgin material by more than five percent (5%). Micro-Deval testing will be waived for RAP material obtained from MoDOT roadways. All RAP material shall be in accordance with Section 221.1 for deleterious and other foreign material.

221.5. Recycled Asphalt Shingles (RAS) may be used in any mixture specified to use PG 64-22 in accordance with AASHTO PP 53 except as follows: A maximum of 7 percent RAS may be used. When the ratio of virgin binder to total binder in the mixture is less than 70 percent, the grade of the virgin binder shall be PG 52-28 or PG 58-28. Shingles shall be ground to 3/8-inch minus. Waste, manufactured or new, shingles shall be essential free of deleterious materials. Post-consumer RAS shall not contain more than 1.5 percent wood by weight or more than 3.0 percent total deleterious by weight. Post-consumer RAS shall be certified to contain less than the maximum allowable amount of asbestos as defined by national or local standards. The gradation of the aggregate may be determined by solvent extraction of the binder or using the following as a standard gradation:

Shingle Aggregate Gradation	Sieve Size Percent Passing by Weight
3/8 in.	100
No. 4	95
No. 8	85
No. 16	70
No. 30	50
No. 50	45
No. 100	35
No. 200	25

SECTION 222

ASPHALTIC CONCRETE PAVEMENT

222.1. Description. Asphaltic concrete pavement shall consist of a mixture of mineral aggregate and asphalt cement prepared in a stationary plant and placed in one or more courses on a prepared base or underlying course in conformity with the line, grade, and section shown on the plans or as directed by the Engineer.

222.2. Materials. All materials shall conform to the following sections of these specifications:

Type	Section
Asphalt Binder PG64-22 or per specs	220.3
Coarse Aggregate	221.1
Fine Aggregate	221.2
Mineral Filler	221.3

Asphaltic concrete mixture shall consist of mineral aggregates with the total aggregate prior to mixing with asphalt binder shall be in accordance with the following gradation requirements:

	Percent Passing by Weight		
Sieve Size	Base	BP-1	BP-2
1 inch	100	100	100
¾ inch	85-100	100	100
½ inch	60-90	85-100	95-100
No. 4	36-65	50-70	60-90
No. 8	25-50	30-55	40-70
No. 30	10-35	10-30	15-35
No. 200	6-12	5-12	5-12

The Engineer may require at the time the job mixture is approved, that not less than 30 percent (30%) of material designated as fine aggregate be incorporated in the mixture. At least thirty (30) days prior to preparing any of the mixture on the project, the Contractor shall obtain, in the presence of the Engineer or his authorized representative, samples of asphalt and mineral aggregates for tests and shall submit in writing the mixing formula which he proposes to use. The mixing formula shall include the type and sources of all materials, the gradations of the aggregates, the relative quantity of each ingredient and shall state a definite percentage for each sieve fraction of aggregate and for asphalt cement. The samples of materials shall be within the limit of size designated by the Engineer and shall be submitted by the Contractor and at the expense of the Contractor to a reputable testing laboratory, which shall design a mix formula meeting these specifications, a copy of which shall be sent to the Engineer.

No mixtures shall be accepted for use on the project until an approved job mixing formula is approved by the Engineer. In producing mixtures for the project the plant shall be so operated that no intentional deviations from the job mixing formula shall be made except as specifically authorized by the Engineer. In any case the maximum variations from the approved

formula shall not be greater than the following requirements and shall be within specifications limits.

Retained on 1/2 inch sieve	5%
Passing 1/2 inch sieve, retained on No. 10 sieve	5%
Passing No. 10 sieve, retained on No. 200 sieve	3%
Passing No. 200 sieve	1%
Asphaltic Cement	0.5%

At least 30 days prior to placing any mixture on the project, the Contractor shall submit a mix design for verification and approval by the Engineer. The mixture shall be designed in accordance with Asphalt Institute Publication MS-2, Mix Design Methods for Asphalt Concrete and Other Hot-Mix Types. The mixture shall be compacted and tested at a minimum of three asphalt contents separated by a maximum of 0.5 percent in accordance with AASHTO T 245, except as herein noted. The test method shall be modified by short-term aging the specimens in accordance with AASHTO R 30. A detailed description of the mix design process shall be included with the job mix formula. Aggregate fractions shall be in accordance with the same proportions as the proposed job mix formula.

The mix design shall include raw data from the design process and shall contain the following information:

(a) Source, grade and specific gravity of asphalt binder.
(b) Source, type (formation, etc.), ledge number(s) if applicable, gradation, and deleterious content of the aggregate.
(c) Plasticity index of each aggregate fraction.
(d) Bulk and apparent specific gravities and absorption of each aggregate fraction in accordance with AASHTO T 85 for coarse aggregate and AASHTO T 84 for fine aggregate, including all raw data.
(e) Specific gravity of hydrated lime, mineral filler or baghouse fines, if used, in accordance with AASHTO T 100.
(f) Percentage of each aggregate component.
(g) Combined gradation of the job mix.
(h) Percent of asphalt binder, by weight (mass), based on the total mixture.
(i) Bulk specific gravity (Gmb) by AASHTO T 166, Method A of a laboratory compacted mixture.
(j) Percent air voids (Va) of the laboratory compacted specimen.
(k) Voids in the mineral aggregate (VMA) and voids in the mineral aggregate filled with asphalt binder (VFA).
(l) Theoretical maximum specific gravity (Gmm) as determined by AASHTO T 209 after the sample has been short-term aged in accordance with AASHTO R 30.
(m) Mixing temperature and molding temperature.
(n) Bulk specific gravity (Gmb) of the combined aggregate.
(o) Percent chert contained in each aggregate fraction.
(p) Baghouse fines added for design.
    (i) Batch and continuous mix plants – Indicate which aggregate fraction to add baghouse percentage during production.
    (ii) Drum mix plants – Provide cold feed settings with and without baghouse percentage.

No mixture will be accepted for use until the job mix formula for the project is approved by the Engineer. The job mix formula approved for each mixture shall be in effect until modified in writing by the Engineer. When unsatisfactory results or other conditions occur, or should a source of material be changed, a new job mix formula may be required.

Base, BP-1 and BP-2 mixtures shall have the following properties, when tested in accordance with AASHTO T 245. The number of blows with the compaction hammer shall be 35 or the number of gyrations shall be 50 with the gyratory compactor. BP-1 and BP-2 mixtures shall have between 60 and 80 percent of the VMA filled with asphalt binder.

Air Voids:	3.5-4.5%
AASHTO T 245 Stability	750 lbs
Voids in Mineral Aggregate	13.0

Bituminous base mixtures that would require 12.0 percent VMA following Asphalt Institute MS-2 will have a minimum 12.0 percent requirement.

In mixtures containing rounded or uncrushed aggregate, it may be necessary for a portion of the aggregate to be a highly angular or crushed material in order to comply with the stability and other requirements. If difficulty is experienced with the aggregate combinations submitted, the Engineer may designate the amount of angular or crushed material necessary after laboratory investigations are made of the combinations proposed by the Contractor.

If the mixing formula submitted for approval or a previously approved mixing formula results in mixtures which are unsatisfactory in the opinion of the Engineer, due to surface texture, workability, segregation tendencies, or for any other reason, the Engineer shall have the right to make any changes within the limits of the specifications which he deems advisable and establish a new mixing formula.

222.2.1. Asphalt Hot-Mix Recycling. Final mix design for recycled mixtures shall be done in accordance with the Asphalt Institute's Manual MS-2 Sixth Edition in the appendix entitled "Mix Design Using RAP." All delivery tickets shall clearly designate the type of recycled mix.

222.3. Equipment

222.3.1. Mixing Plant--General. The plant site shall have adequate storage facilities. Sufficient storage space shall be provided for separate stock piles, or stalls for each size and type of aggregate. The different aggregates shall be kept separated until they have been delivered, without segregation, by the feeders to the boot of the cold elevator in their proper proportions. The separate stock piles shall be readily accessible for sampling. Contractor shall record and maintain temperatures at the plant.

Approved mechanical feeders shall be provided for feeding aggregate to the elevator charging the drier. The feeders shall be of any type that will provide accurate control and positive adjustment of the proportions for each size and type of aggregate used in the production of the asphaltic mixture.

The aggregates shall be dried and heated in a rotary drier capable of drying and heating the aggregate as specified at the rated capacity of the mixer. The drier shall be equipped with heating equipment which can be positively regulated and an efficient dust collecting system preventing the loss of fine material. The material collected shall be returned to the mixture at a uniform rate or wasted as approved by the Engineer. The heated aggregate shall be at a temperature of not less than two hundred twenty-five degrees Fahrenheit (225°F.) and not more than three hundred fifty degrees Fahrenheit (350 °F.) when delivered to the batching hopper. Feeding any drying equipment shall be operated in such a manner that the temperature of the aggregates is maintained within twenty-five degrees Fahrenheit (25°F.) above or below that directed by the Engineer. Absorbed moisture in the aggregate shall be reduced to such a quantity that there is no segregation of asphalt resulting from escaping water vapor in the prepared mixture and in no case shall exceed 0.5%.

The screening unit shall be capable of screening all aggregates into the sizes required for proportioning and shall have a normal capacity in excess of the full capacity of the mixer or the drier. The screening unit shall separate the usable heated aggregate into at least three (3) sizes. One of the sizes produced shall contain not more than ten percent (10%) by weight retained on the No. 10 sieve. The efficiency of the screening operation shall be sufficient to produce, at plant operating capacity, gradations in each of the sizes of heated and dried aggregates which are reasonably uniform and result in the production of a mixture complying with the limits specified hereinbefore.

Storage bins shall have sufficient capacity to supply the mixer when it is operating at full capacity. Bins shall be divided into compartments to provide separate and adequate storage for each aggregate fraction produced and used in proportioning. Separate dry storage shall be provided for mineral filler. Each compartment shall be provided with an overflow pipe, at least four (4) inches in diameter, located to prevent backing up of material into other bins. The bin shall have a "tailing" pipe, at least six (6) inches in diameter, for rejection. The discharge points of overflow and "tailing" pipes shall be located so they will not create a hazard. Overflow pipes shall not return the material directly to the hot elevator. Each compartment shall be provided with an individual outlet gate, designed and constructed so that when closed there will be no leakage. The gates shall be designed to cut off quickly and completely. Each bin shall be equipped with a device approved by the Engineer for readily obtaining samples of the aggregate at bin discharge.

Not less than two (2) asphalt storage tanks shall be provided at the proportioning and mixing plant, if asphalt is delivered in transport trucks. Piping and valve arrangements shall permit material to be used from any of the tanks without using from the other at the same time.

Asphalt cement shall be heated in either steam, electric, or oil heated tanks or kettles and shall be maintained during the period that mixture is manufactured, at a temperature within the limits of the range specified in Section 220.4. The equipment for handling the asphalt, including pumps, pipe lines, and storage tanks, shall be entirely separate and have no connections to the system used for handling fuel oil or other materials on the project.

An armored thermometer reading from two hundred fifty degrees Fahrenheit (250EF) to

three hundred fifty degrees Fahrenheit (350°F) shall be fixed in the asphalt circulating system near the valve at the mixing unit. An accurate registering pyrometer or other approved thermometric instrument shall be installed in the discharge chute of the drier in such a manner that the temperature of the heated aggregate is automatically registered. This instrument shall be located where it is in clear view of the drier fireman and readily accessible to the inspector.

Equipment shall be furnished which will accurately record the temperature of the heated and screened aggregates in two (2) of the hot aggregate bins. One terminal shall be placed in the hot bin containing the smallest aggregate used in the mix and the other terminal shall be placed in the largest aggregate. The terminals shall be located where the hot material will flow around them during the proportioning operation and shall not be located near the corners of the bins or at points where the material will collect or pack around them. The temperatures shall be continuously recorded either on individual charts or both may be recorded on a single chart. The charts shall record both time and temperature. The smallest interval of time shown shall be not more than fifteen (15) minutes and the temperature gradations shall be not greater than ten degrees Fahrenheit 10°F.). The charts shall be removed from the recorder at the end of each day's operation and shall be furnished to the Engineer.

222.3.2. Special Requirements for Batch Type Plants. Batch type plants shall be equipped with all units described above under 222.3.1, and with special units as described below:

Weighing equipment for proportioning mineral aggregate shall be of such design and construction that each batch can be quickly and accurately weighed. Excessive vibration of the weighing assembly will not be permitted. The weighing unit shall consist of a hopper or hoppers large enough to hold one (1) batch without running over or without manual placing, suspended from a system of fulcrums and knife-edges connected to a multiple beam or springless dial scale. Multiple beam type scales shall be equipped with a tare beam, a separate beam for each size of aggregate and a sensitive "tell-tale" dial. Springless dial scales shall be equipped with a dial which has a capacity not to exceed twice the full capacity of the mixer, and shall be of standard make and equipped with a tare beam. Asphalt cement shall be measured by weight in an electric heated, or a hot oil, or steam-jacketed bucket suspended from a springless dial or beam type scale; or shall be measured by volume in an approved automatic asphalt meter. If a metering device is used, continuous circulation shall be maintained in the line supplying asphalt to the meter. Springless dial scales used for weighing asphalt shall have a tare beam and a dial graduated in one (1) pound increments to the maximum dial capacity which shall not be more than fifteen percent (15%) of the nominal capacity of the mixer. Beam type scales shall be equipped with a tare beam, a full capacity beam and a "tell-tale" dial, the pointer of which moves through an arc, representing not less than one-tenth (1/10) the maximum load to be applied. All scales used to weigh the ingredients of the asphaltic mixture shall be designed and assembled so that they can be maintained within a maximum tolerance of four-tenths percent (0.4%) of the net load applied. Not less than ten (10) fifty (50) pound standard test weights shall be available at any time for testing and calibrating weighing equipment.

Batch type plants shall be equipped with a twin shaft pugmill mixer. The pugmill shall be electrically heated or hot oil, or steam jacketed and have a capacity of not less than two thousand (2,000) pounds per batch. The discharge gate shall fit snugly to prevent loss of material. Leakage from the pugmill during the mixing operation will not be permitted. Mixing paddles shall be in first class condition and shall be so arranged as to circulate the mixture

entirely around the mixer box. Not more than one pair of paddle tips on each mixer shaft shall be reversed with respect to the other paddle tips on that shaft. The reversed pair of paddle tips on each shaft shall be located in diagonally opposite corners of the pugmill. The clearance of blades from all fixed and moving parts shall not exceed three-fourths (3/4) inch unless the maximum size of the aggregate exceeds one (1) inch. The mixer shall be covered to prevent the loss of fine material. A conveniently located, easily opened gate or door shall be provided in the mixer cover for observation of the mixing operation. The mixer platform shall be of ample size to provide safe and convenient access to the mixer, weight hopper and scales. The Contractor shall provide a safe stairway to the mixer platform and safe access to other parts of the plant which are subject to occasional inspection.

Each mixer on the plant shall be equipped with an accurate time lock to automatically control the operations of a complete mixing cycle. It shall lock the aggregate weigh box after charging of the mixer, until the cycle is completed; it shall lock the asphalt weigh bucket or asphalt metering device throughout the dry and wet mixing periods. The dry mixing period shall start when all of the mineral aggregates have been charged into the mixer and end when the introduction of the asphalt cement begins. The wet mixing period shall begin when the introduction of the asphalt cement is started and end when the discharge gate is opened.

The quantity of mixture produced per batch shall not exceed the manufacturer's rated capacity as determined from the rating plate attached to the mixer or the manufacturer's specifications. The manufacturer's rated capacity will not be accepted unconditionally. If, in the opinion of the Engineer, the mixer does not operate efficiently at the rated capacity or does not produce a satisfactory mixture, or if its production does not coordinate with other plant units, the right is reserved to reduce the size of the batch until a satisfactory mixture is obtained. If the rated capacity of the mixer is not known, the size of the batch shall be determined from the net cubical content of the mixer below the center of the mixture shafts. If the pugmill does not produce a satisfactory mixture at the established capacity due to overloading, the size of the batch shall be reduce until satisfactory performance is obtained. The decision of the Engineer as to the permissible capacity of the mixer shall be final.

222.3.3. Special Requirements for Continuous Mixing Plants. Continuous mixing plants shall be equipped with all units as described above under 223.2.1, and with special units as described below:

The plant shall be equipped with means for accurately proportioning each size of aggregate either by weighing or by volumetric measurement. Continuous weighing devices shall be of sturdy construction and design and shall be accurate to 0.4 of one percent of the net load applied. The equipment shall be maintained in good condition and adjustment, and shall operate accurately. The volume proportioning device shall include a mechanical feeder mounted under the bins, and each bin shall have an accurately controlled individual gate to form an orifice for volumetrically measuring the material drawn from each bin. The orifice shall be rectangular, its dimensions approximately eight (8) inches by nine (9) inches, with one dimension fixed and the other dimension adjustable by positive mechanical means. An indicator shall be provided on each gate to show the size of gate opening in inches. The proportioning unit shall be equipped with an approved revolution counter directly connected to the aggregate feeder shaft and shall register accurately to the nearest 0.01 revolution. On each of the storage bins for the heated aggregates, a device shall be installed to indicate when the level of the material in the bin is

below the point where accurate proportioning through the feeder gates can be accomplished. These indicators shall be positive in action and shall be made to actuate either lights or other approved devices located in a position where they will immediately attract the attention of the mixer operator and warn him that the material in the bin is below the safe operating level. If mineral filler is required as a separate ingredient, it shall be proportioned by volume through a special feeding unit. Equipment suitable for calibrating by weight the flow of material from bins to the mixing unit shall be available at all times.

Asphalt cement shall be proportioned by volume in an approved asphalt metering pump. The pump shall deliver the asphalt to the pugmill at a uniform rate which shall not vary more than two percent (2%) by weight from the required quantity. The asphalt shall be introduced into the pugmill in a manner which will result in a thoroughly uniform distribution of the asphalt in the final mixture at the end of the mixing operation.

The aggregate proportioning unit and the asphalt metering pump shall be mechanically interlocked. This interlocking device shall be of a type that the quantity of either asphalt or aggregate can be positively adjusted and when the correct proportions are established the flow can be accurately controlled.

The plant shall be equipped with a twin-shaft, electrically heated, or hot oil, or steam-jacketed pugmill. It shall have a capacity of not less than forty (40) tons per hour. The paddles shall be adjustable for angular position on the shafts and reversible to retard the flow of the mix. The mixer shall carry a manufacturer's plate giving the net volumetric content of the mixer at the several heights inscribed on a permanent gauge and also giving the rate of feed of aggregates per minute at plant-operation speed. The manufacturer's rating of the mixing unit will not be accepted unconditionally. The right is reserved to reduce the rate of feed of aggregate per minute at plant-operating speed to produce a satisfactory mixture. The decision of the Engineer as to the permissible capacity of the mixing unit shall be final.

Unless otherwise required, mixing time shall be determined by the following formula:

Mixing time in seconds	=	Pugmill dead capacity--in pounds
	=	Pugmill output--in pounds per second

The weights shall be determined for the job by tests made by the Engineer.

222.3.4. Rollers. Self-powered steel-wheeled rollers shall be used and in addition, self-propelled, pneumatic-tired rollers may be required by the Engineer.

Steel-wheeled rollers shall weigh not less than eight (8) tons and not more than twelve (12) tons and they shall be equipped with adjustable spring scrapers fitted to the driving and steering rolls. These rollers shall develop contact pressure of 250 to 350 pounds per inch of width (vibratory mode) or 150 to 180 pounds per inch of width (static). They shall also be equipped with sprinkling systems which will uniformly moisten each wheel. Wetting devices such as coco mats shall be included when necessary.

The pneumatic-tired rollers shall be self-propelled and shall consist of not less than seven (7) pneumatic-tired wheels revolving on two (2) axles. Axles shall be mounted in a rigid frame

provided with a loading platform or body suitable for ballast loading. The tires on the front and rear wheels shall be staggered so that they will cover the entire area over which the roller travels, with a minimum overlap of one-half (1/2) inch. The roller shall operate smoothly and without jerking when starting, stopping, or reversing direction. The roller shall be constructed such that each wheel is loaded to a minimum of 2,300 pounds, but not more than five hundred (500) pounds per inch width of tire tread in contact with the bituminous surface. The tires shall be inflated to an air pressure of not less than ninety (90) pounds per square inch. The roller shall be equipped with an adequate scraping or cleaning device on each tire to prevent the bituminous mixture from accumulating on the tires. The roller shall be equipped with a water system which will keep all tires uniformly wet, and which will have a capacity that will provide not less than two (2) hours continuous operation without refilling.

Trench rollers shall have an auxiliary wheel that operates outside the area to be compacted at such a distance from the pavement edge as to cause no damage thereto. It shall be mounted upon an axle that is adjustable in height. The auxiliary wheel shall be kept in adjustment so that the compression wheels will develop a smooth, compacted surface true to crown and grade. The contact pressure of the compression wheels shall be from 250 to 350 pounds per inch of width.

In lieu of the above requirements pertaining to non-vibratory compaction equipment, consideration will be given to use other types of equipment that are capable of producing equivalent results consistent with the requirements of the specifications.

222.3.5. Testing. During production the plant shall have the following tests performed by an approved laboratory: AC content, extracted gradation, Marshall density, stability, voids, VMA, VFA and max theoretical density. Laboratories shall be approved if they are:

a. Accredited in accordance with ASTM D3666; and/or

b. Approved for Superpave asphalt testing by the State Highway Department in the state where the plant is located.

c. Test mixture at least once every 1000 tons. During paving, Engineer may designate as many tests as necessary to assure proper thickness, composition and density. If over 500 tons per day are placed, one acceptance test per day shall be performed. Not less than one test shall be performed every five days.

d. Air voids are to be within +/- 1% of mix design. The number of blows with the compaction hammer shall be 35 or the number of gyrations shall be 50 with the gyratory compactor.

e. Gradation to be within tolerances specified.

f. Asphalt content is to be within +/- 3% of mix design.

g. If four consecutive tests show noncompliance with the specifications, production of asphalt shall immediately cease and may not be resumed until a new mix design is submitted and approved, or the plant can demonstrate to the Engineer an ability to meet specifications.

h. A copy of all testing and quality control records shall be made available upon request by the Engineer.

222.4. Construction Procedure.

a. Preparation of Mixture. The asphalt cement shall be carefully heated, without

damage by overheating, to a workable temperature as designated by the Engineer within range established by Section 220.4, Application Temperatures for Bituminous Materials. If asphalt is measured by volume, the temperature of the asphalt at the time of measuring shall not vary more than fifteen degrees Fahrenheit (15EF.), from that designated by the Engineer when the metering device was calibrated. The final mixture shall not exceed three hundred fifty degrees Fahrenheit (350EF.) when discharged from the pugmill, and shall not vary more than twenty-five degrees Fahrenheit (25EF.) from the temperature designated by the Engineer.

b. Batch Type Plants. The dry hot aggregates, mineral filler if required, and asphalt cement shall be accurately proportioned in the amounts required by the job mix formula. Aggregate shall be charged into the weigh hopper in a sequence that will avoid segregation. The mineral aggregate shall be mixed dry for not less than fifteen (15) seconds, after which the asphalt cement shall be charged into the mixer in a manner that will uniformly distribute the asphalt over at least three-fourths (3/4) the full length of the mixer. The time required to add the asphalt shall not exceed fifteen (15) seconds. Net mixing shall continue for at least thirty (30) seconds after the introduction of the asphalt cement begins or longer if necessary to produce a homogeneous mixture in which all particles are coated uniformly. The dry mixing period for Type A mixture may be decreased to not less than ten (10) seconds, provided there is no segregation of the aggregates. The dry and wet mixing times shall be as directed by the Engineer.

c. Continuous Mixing Plants. Each size of hot aggregate, mineral filler if specified, and the asphalt cement shall be accurately proportioned in the amounts required by the job mix formula. The mixing period shall be determined as hereinbefore specified for continuous mixing plants and shall be not less than thirty-five (35) seconds. The mixing time shall be as directed by the Engineer, and may be increased above the minimum specified if necessary to produce a homogeneous mixture.

d. Transportation of Mixture. Trucks used for hauling bituminous mixtures shall have tight, clean, smooth, metal beds that have been thinly coated with a minimum quantity of BR3600 by BioSpan Technologies, Inc. or equal, to prevent the mixture from adhering to the beds. The release agent shall not be diluted less than the minimum rate specified by the manufacturer and shall be applied with equipment recommended by the manufacturer. Use of diesel fuel, fuel oil or other detrimental products as a bed coating or dilution agent will not be permitted. Each truck shall have a cover of canvas or other suitable material of such size to protect the mixture from the weather. The cover shall be securely fastened over all sides of the truck bed. Truck beds shall be insulated, when necessary, such that the mixture will be delivered on the road at the specified temperature. No loads shall be sent out so late in the day that spreading and compacting of the mixture cannot be completed during daylight. Vehicle scales shall have a valid certification from the State of Missouri Department of Agriculture-Weights and Measures division.

e. Application of Primer. The prime coat, when specified, shall be applied as set forth in Section 223.

f. Spreading of the Mixture, Pavers and Laydown Machines. The base course, primed surface, or preceding course shall be cleaned of all dirt, packed soil, or any other foreign material prior to spreading the asphalt mixture. Asphaltic concrete shall not be placed on any portion of an aggregate base when the moisture content of the top two (2) inches of the base is more than two-thirds (2/3) of the optimum moisture. The mixture shall be spread in the number of layers and in the quantity required to obtain the compacted thickness and cross section shown on the plans. When placing multiple layers with varying thicknesses, the thicker layer shall be placed first. The compacted thickness of a single layer of bituminous pavement mixture shall be no more than 2 inches for the surface course and 4 inches for the leveling course.

The mixture, when delivered to the spreading and finishing machine shall have a temperature of not less than two hundred degrees Fahrenheit (200°F.) and be within twenty-five degrees Fahrenheit (25°F.) of that designated by the Engineer. It shall be spread only when the prepared grade or preceding course is dry. Bituminous material shall not be mixed or placed when the atmospheric temperature is below forty degrees Fahrenheit (40°F.) or when there is frost in the subgrade, or any other time when weather conditions are unsuitable for the type of material being placed.

The thickness and width of each course shall conform to the typical section in the Contract. The Contractor may construct each course in any number of layers he chooses but no individual layer shall have a compacted thickness of more than 2 inches for the surface course and 4 inches for the leveling course.

For pavements having a width of sixteen (16) to twenty-four (24) feet, inclusive, the asphaltic concrete pavement shall be laid in lanes approximately one-half (1/2) the full width of the completed pavement and the full width completed as soon as practicable. Unless otherwise permitted, a single lane of any course shall not be constructed to a length which cannot be completed to full width of the pavement in one day's operation. For pavement greater than twenty-four (24) feet in width, single lane width constructed shall be limited to one day's production and completion to full width shall be accomplished as soon as practicable.

Mechanical self-powered pavers shall be capable of spreading the mix within the specified tolerances, true to the line, grade and crown indicated on the plans. No segregation will be permitted in handling the mixture at the plant, from the truck, or during spreading operations on the roadway.

Pavers shall be equipped with quick and efficient steering devices and shall be capable of traveling both forward and in reverse. They shall be equipped with hoppers and distributing screws that place the mix evenly in front of the adjustable screeds. They shall be equipped with either a vibrating screed or a tamping bar immediately preceding a static screed.

There shall be sufficient auxiliary attachments for the paving machine so that it may be operated to lay the necessary width as determined in the field by the Engineer. Vibrating screed or tamp bars shall be provided for the full width of all paving operations.

The screed shall include a strike-off device which is effective on mixes at workable temperatures without tearing, shoving or gouging them, and which produces a finished surface of an even and uniform texture. The screed shall be adjustable as to the height and crown and shall be equipped with a controlled heating device for use when required. However, for irregular width paving, hydraulic extensions without tamping bars or a vibrating screed may be used only along the curb or outer edge of pavement.

Automatic Screed Controls: The paver shall be equipped with and use an approved system capable of automatically controlling the elevation and transverse slope of the paver screed unless otherwise directed by the Engineer. An erected stringline, traveling stringline or other approved device operating on the roadbed being paved or the surface of the previously placed lane shall be used to establish the grade reference. The grade reference device shall operate on either or both sides of the paver as required and shall be capable of maintaining the desired transverse slope regardless of changes in the screed elevation. The traveling stringline shall be constructed in such a manner that it does not vibrate or cause the sensor to make erroneous readings during the laydown operation. The length of the beam to be used shall be approved by the Engineer and shall be between 20 and 40 feet. The use of the automatic screed control devices on asphalt pavers will not be required for paving small irregular areas, entrances, approaches, or side street connections. Automatic screed control devices will be required for matching the joint with all previously laid strips, except for those areas noted above.

The mixture shall be spread without tearing the surface and struck off such that the surface is smooth and true to cross section, free from all irregularities, and of uniform density throughout. Care shall be used in handling the mixture to avoid segregation. As soon as the first load of material has been spread, the texture of the unrolled surface shall be checked to determine its uniformity. Segregation of materials shall not be permitted. If segregation occurs, the spreading operation shall be immediately suspended until the cause is determined and corrected. Areas of segregated mixture shall be removed and replaced with a suitable mixture at the Contractor's expense. The outside edge alignment shall be uniform. Irregularities shall be corrected by adding or removing mixture before compacting. In situations where there is a dispute in the existence of segregation, the area in question will be tested in accordance with MoDOT Test Method TM 75. Mixture production shall immediately cease if either criteria of MoDOT Test Method TM 75 fail. Segregated mixtures shall be removed and replaced to the limits determined by the Engineer.

The paving machine shall be operated so that the material does not accumulate

and remain along the sides of the receiving hopper. The wings of the spreader hopper shall not be emptied (flipped) between truck loads. Equipment which leaves tracks or indented areas which cannot be corrected in normal operation, or which produces other permanent blemishes or fails to produce a satisfactory surface, shall not be used. The screed auger shall be operated approximately ¾ full and the hopper conveyor shall not be allowed to run out of material during the paving operation.

Sufficient trucks shall be used to continuously supply asphalt to the paver. Delays in the paving operation shall be kept to a minimum. The Contractor shall make every effort to minimize the number of passes heavy equipment makes over uncompleted roadway sections.

When using pavers in echelon, the second paver shall follow the edge of the material placed by the first paver. The length of each laydown pass shall be limited, depending on weather conditions, to assure a hot joint and obtain proper compaction.

Any irregularities in alignment left by the paver shall be corrected by trimming directly behind the machine. Distortion of the pavement during this operation shall be avoided.

All courses shall be feathered out, by hand raking if necessary, in transitioning, the depth of the surface to meet present grades at end of projects to provide a uniform smooth riding surface free of irregularities

When the asphaltic concrete construction consists of more than a single course, each course shall be compacted as specified and allowed to cool throughout to the atmospheric temperature before the next course is placed. The Contractor shall keep traffic off the asphaltic concrete until it has cooled for a sufficient period of time to prevent flushing of the asphalt to the surface, marking or distorting the surface, or breaking down the edges. Normally, this time will vary from two (2) to four (4) hours, depending on the atmospheric and temperature conditions. The final course shall be laid in the same sequence over the entire project as the previously constructed courses unless otherwise approved by the Engineer.

In small areas where the use of mechanical finishing equipment is not practical, the mix may be spread and finished by hand. The material shall be distributed uniformly to avoid segregation of the coarse and fine aggregate. Broadcasting of material shall not be permitted. During the spreading operation, all material shall be thoroughly and uniformly distributed by lutes or rakes. Material that has formed into lumps and does not break down readily shall be removed. Following placing and before rolling, the surface shall be checked with templates and straightedges and all irregularities corrected.

g. Wedge Course. Since one of the primary objectives of this construction is to obtain the smoothest possible riding surface, the existing roadbed surface will be studied by the Engineer to determine the location's thickness of wedge courses.

This procedure may result in wedging operations over small areas, and rigid control of placement thickness will be required to ensure desired feather-edging at high points and ends of wedge areas. Wedge course, consisting of a layer of asphaltic concrete of variable thickness used to eliminate irregularities in the existing base, shall be spread uniformly to the desired profile grade and cross section. The use of an approved finishing machine will be required on all work. Type BP-2 mixture shall be used for all wedge course.

h. Compaction. Compaction of asphaltic mixtures shall consist of initial or break-down rolling, intermediate rolling, and final or finish rolling. Except for projects involving small quantities of mixture, initial rolling shall be performed with three (3) wheel rollers or two (2) wheel tandem rollers weighing from eight (8) to twelve (12) tons. Intermediate rolling shall be done with oscillating type pneumatic-tire rollers if required by the Engineer; otherwise it shall be done with either two (2) or three (3) wheel tandem rollers. Final rolling shall be done with either two (2) or three (3) wheel tandem rollers weighing not less than ten (10) tons. Rollers shall be operated at a speed of not more than three (3) miles per hour and in a manner that will avoid shoving, cracking or displacing the mixture during the compacting period. The Contractor shall furnish a sufficient number of rollers to compact and finish satisfactorily the amount of mixture being placed.

The mixture shall be rolled when it is at the proper temperature to receive the roller and when rolling does not cause undue displacement or shoving. This proper temperature varies with the atmospheric condition and type of mixture. Initial compaction shall be done when the mixture has cooled just sufficiently to receive the roller. Intermediate and final compaction shall be done while the mixture is warm and malleable enough to respond to the kneading action of the roller. Rolling shall begin at the sides and progress gradually to the center of each lane. Rollers shall move parallel to the center line of the roadway and uniformly lap each preceding track. Alternate trips of the roller shall be terminated in steps to prevent the formation of surface irregularities. The alternate stops shall be spaced in such a manner that any excess water will drain quickly. Lateral or diagonal rolling may be permitted to remove high spots, provided the rolling is done in such a manner and at such a time that shoving or cracking will not result. To prevent adhesion of the mixture, steel roller wheels shall be properly moistened, but an excess of water will not be permitted.

All mixtures shall be thoroughly compacted and rolling shall be continued until no further compaction is being obtained. Except as otherwise specified, all compacted mixtures shall have a density not less than ninety-eight percent (98%) of that obtained by the laboratory compaction of an identical mixture.

Along curbs, headers, manholes and similar structures and at all places not accessible to the roller, thorough compaction must be secured by means of hot tampers and at all contacts of this character the joints between these structures must be effectively sealed.

The compacted course shall be free of surface irregularities and shall conform to

the grade and dimensions shown on the plans. Weak areas resulting from excess quantities of asphalt, segregation of aggregate or asphalt, areas which become loose or broken, mixed with dirt, or are in any way defective, shall be removed and replaced with fresh hot mixture, compacted to conform with the surrounding area, at the Contractor 's expense.

Thin Layers (Lifts): When placing a thin lift (less than 2 in. compacted thickness) in single-lane width or full width, the mixture should be rolled in the following sequence:

1. Transverse joint.
2. Outside edge.
3. Breakdown rolling, beginning on the low side.
4. Intermediate rolling; same procedure as Step 3.
5. Finish rolling.

When paving a thin lift in echelon, or when abutting a previously placed lane or other lateral restraint, the mixture should be rolled in the following sequence:

1. Transverse joint.
2. Longitudinal joint.
3. Outside edge.
4. Breakdown rolling, beginning on the low side.
5. Intermediate rolling; same procedure as Step 4.
6. Finish rolling.

Thick Layers (Lifts): When placing a thick lift (2 in. or more compacted thickness) in single-lane width or full width, the mixture should be rolled in the following sequence:

1. Transverse joint.
2. Breakdown rolling, beginning 12 to 15 in. interior to the lower unsupported edge. The return pass shall be made with the edge of the roller 3 inches exterior to the unsupported edge of the pavement.
3. Breakdown rolling of outside edge. Repeat the process described in Step 2 above on the other longitudinal edge.
4. Intermediate rolling, beginning on the low side.
5. Finish rolling.

When paving a thick lift in echelon, or when abutting a previously placed lane or other lateral restraint, the mixture should be rolled in the following sequence:

1. Transverse joint.
2. Longitudinal joint.
3. Breakdown rolling, beginning at the longitudinal joint.
4. Intermediate rolling, beginning on the low side.
5. Finish rolling.

When paving in echelon, 2-3 inches of the first mat shall be left unrolled, and rolled when the joint between the lanes is rolled and after the 2nd mat is placed. Edges shall not be exposed more than fifteen minutes without being rolled. Particular attention shall be given to the construction of transverse and

longitudinal joints in all courses.

In laying a surface mix adjacent to any finished area, it shall be placed sufficiently high so that, when compacted, the finished surface will be true and uniform. Where the grade is slight a level will be used to ensure drainage to the desired outlet.

Transverse joints: When the transverse joint is next to an adjoining lane, the first pass shall be made with a static steel-wheeled roller moving along the longitudinal joint for a few feet. The surface will then be checked with a straightedge and corrections shall be made if necessary. The joint then shall be rolled transversely, with 6 in. of the drum width on the newly laid material. This operation shall be repeated with successive passes, each covering an additional 6 to 8 in. of the new mat, until the entire width of a drive roll is on the new mixture. During transverse rolling, wooden boards of the proper thickness should be placed at the edge of the pavement to give the roller a surface to drive on once it passes the edge of the mat. If boards are not used, transverse rolling must stop 6 to 8 in. short of the outside edge to prevent damaging it, and the edge must be compacted later during longitudinal rolling. Transverse joints shall be carefully constructed and thoroughly compacted to provide a smooth riding surface. If the joint has been distorted, it shall be trimmed to a line. The joint face shall be tacked before the fresh material is placed against it.

Longitudinal joints: Longitudinal joints shall be rolled directly behind the paving operation. The edge to be joined shall be tack coated. The paver screed shall be set to overlap the first mat by 1-2 inches. The elevation of the screed above the surface of the first mat should be equal to the amount of roll-down expected during compaction of the new mat. For large aggregate mixes, the coarse aggregate in the material overlapping the cold joint should be carefully removed and wasted, leaving only the finer portion of the mixture to be pressed into the compacted lane at the time the joint is rolled. For mixes with smaller coarse aggregate, such as surface courses, the overlapping material should be pushed with a lute into a hump over the joint area prior to compaction.

Edges: The edges of the pavement shall be rolled concurrently with or immediately after rolling the longitudinal joint. In rolling pavement edges, roller wheels shall extend 2-4 inches beyond the pavement edge provided the lateral displacement is not excessive.

Breakdown Rolling: Breakdown rolling shall immediately follow the rolling of the longitudinal joint and edges. Rollers shall be operated as close to the paver as necessary to obtain adequate density without causing undue displacement. The breakdown roller shall be operated with the drive wheel nearest the laydown machine. Exceptions may be made by the Engineer when working on steep slopes or super-elevated curves.

Intermediate Rolling: Pneumatic-tired rollers shall be used for intermediate rolling. The intermediate rolling shall follow the breakdown rolling as closely as

possible and while the paving mix is still of a temperature that will result in maximum density from this operation. Pneumatic-tired rolling shall be continuous after the initial rolling until all of the mix placed has been compacted to the required density. Turning of pneumatic-tired rollers on the hot paving mix which causes displacement shall not be permitted.

Finish Rolling: The finish rolling shall be accomplished while the material is still warm enough for the removal of roller marks. All roller marks shall be removed by the finish rolling operation. All rolling operations shall be conducted in close sequence.

In places inaccessible for the operation of standard rollers as specified, compaction shall be performed by trench rollers or others meeting the requirements of Section 222.3.4 entitled "Rollers." The trench roller shall be operated until the lift is thoroughly compacted. Hand tamping, manual or mechanical, may be used in such areas, if such operations will give the required density.

i. Joints. Longitudinal joints and edges shall be constructed to true lines. Lines for the paver to follow in placing individual lanes will be established parallel to the centerline of the proposed roadway. The paver shall be positioned and operated to follow closely the established line. Transverse joints in succeeding courses shall be offset at least 2 feet. Longitudinal Joints shall be offset at least 6 inches. The longitudinal joints shall be laid out so that the surface joint is under the lane markings where possible. Edges against which additional pavement is to be placed shall be placed on a 30° (2:1) bevel, or as specified by the Engineer. Any irregularities in the surface of the pavement course shall be corrected directly behind the paver. Excess material forming high spots shall be removed by a shovel or lute. Indented areas shall be filled with hot mix and smoothed. Broadcasting of material shall not be permitted.

Well bonded and sealed joints are required. Joints between old and new pavements, or between successive day's work shall be carefully made in such a manner as to ensure thorough and continuous bond between the old and new surfaces. Hot soothers or tampers shall be carefully employed in such a manner as to heat up the old pavement sufficiently (without burning it) to ensure a proper bond. Before placing mixture against them, all contact surfaces of dry longitudinal joints, curbs, gutters, headers, manholes, etc., shall be painted with a thin uniform coating of primer. In making the joint along any adjoining edge such as a curb, gutter, or an adjacent paving and after the hot mixture is placed by the finishing machine, just enough of the hot material shall be carried back to fill any space left open. The joint shall be properly "set-up" with the back of rake at proper height and level to receive the maximum compression under rolling. The work of "setting-up" this joint shall be performed always by competent workmen who are capable of making a correct, clean, and neat joint.

i. Testing Pavement. At least one in situ density test shall be conducted per 300

linear feet of street pavement, and three 4" diameter core samples shall be taken per 500 linear feet of street pavement for the determination of the average pavement thickness. The finished courses shall have the thickness shown on the plans and shall be free from waves or irregularities and shall not vary from a ten (10) foot straight-edge, applied parallel to the center line, by more than one-half (1/2) inch on the first or intermediate courses and not more than one-eighth (1/8) inch on the surface course.

For determining the qualities of the mixture in the compacted state, specimens shall be sawed from any finished course as directed by the Engineer. The area damaged by removing the specimen shall be repaired with hot mixture properly compacted. For cutting samples of compacted mixture from the pavement as directed by the Engineer and replacement of the surface, the Contractor will be paid five dollars ($5.00) per sample.

222.5. Method of Measurement. Measurement of asphaltic concrete will be made to the nearest ton of satisfactory mixture complete in place. When the mixture is produced by a batch type plant, the batch weights will be used to determine the tonnage. When the mixture is produced by a continuous mixer type plant, the quantity of mixture will be determined by weighing each truck load on an accurate and reliable scale approved by the Engineer.

222.6. Basis of Payment. The quantities complete in place and accepted, will be paid for at the applicable Contract unit prices per ton, as described below, which payment shall be full compensation for furnishing, mixing, hauling and placing materials, and for all labor and use of equipment, tools and incidentals necessary to complete the work in accordance with these specifications. Payment will be made for asphaltic concrete placed in accordance with these specifications, as follows:

Item 222.1. Wedge course, per ton or square yard.
Item 222.2. Asphaltic concrete base, per ton or square yard.
Item 222.3. Type BP-1 asphaltic concrete, per ton or square yard.
Item 222.4. Type BP-2 asphaltic concrete, per ton or square yard.

SECTION 223

PREPARATION OF BASE AND APPLICATION OF PRIMER AND TACK COATS

223.1. Description. Preparation of base and application of primer shall consist of applying a primer or tack coat to a prepared base. The type and grade of prime material to be used will be specified in the Contract.

223.2. Materials. All materials shall conform to the requirements of the Asphalt Paving Institute MS-4 and MS-5 requirements. Performance graded binders shall be in conformance with Section 220.3

The quantity of asphalt in emulsified asphalts may be reduced to thirty-five percent (35%) when directed by the Engineer.

223.3. Equipment. The equipment required on this work shall consist of a pressure distributor meeting the requirements specified below and other approved equipment including a five (5) ton roller. The pressure distributor shall be so designed, equipped, maintained and operated that liquid asphalt at even heat may be applied uniformly on variable widths of surface up to 15 feet at readily determined and controlled rates from 0.02 to 1.00 gallons per square yard, with uniform pressure, and with an allowable variation from the specified rate not to exceed 0.02 gallons per square yard. Distributor equipment shall include a tachometer, pressure gauges, a calibrated tank and a thermometer for measuring temperatures of tank contents. Distributors shall be equipped with a power unit for the pump, and full circulation spray bars adjustable laterally and vertically. The calibration of all distributors must be approved by the Engineer, and the Contractor shall furnish all equipment, material and assistance necessary if calibration is required. The pressure distributor shall be designed and equipped with pressure gauges to enable the operator to control the flow and to distribute the primer under a uniform pressure of not less than twenty-five (25) pounds per square inch. Adjustable length, spray bars shall be operated a proper distance above the ground to ensure a fifty percent (50%) lap of the sprays from adjacent jets.

223.4. Construction Procedure. Preparation of Base.

Prime Coats:

a. Prime coats shall be used at all cul-de-sacs, intersections, and where pavement lifts are less than 4".
b. Absorbent Surface. The surface to be primed shall be shaped to the required grade and cross section, shall be free from all ruts, corrugations, segregated material or other irregularities, and shall be uniformly compacted by rolling. When the base consists of bound aggregate, loose gravel, or stone, the existing surface shall be prepared by wetting, if necessary, and blading and rolling in accordance with Section 205 unless otherwise specified. These operations shall continue until a smooth, uniform and compact surface is obtained, and shall be performed just prior to applying the primer. The surface shall be slightly damp and firm when primer is applied, no direct payment will be made for furnishing or applying any required water. Delays in priming may necessitate reprocessing or

reshaping to provide a smooth compacted surface.

c. Non-absorbent Surface. When the base is of concrete, brick, or other non-absorbent surface, the surface of the base shall be cleaned of all dust, loose material, grease or other foreign material, and shall be maintained in this condition until the primer is applied. Any fat bituminous surface mixture or bituminous joint material will be removed by others without cost to the Contractor before the primer is applied. If sixty to one hundred (60-100) Penetration Asphalt is permitted as an alternate for RC-0 for primer on non-absorbent type of surface, the penetration asphalt shall be cut back by the addition of naphtha to produce a final product that is the approximate equivalent of RC-0. The naphtha used shall have an initial boiling point of not less than one hundred eighty degrees Fahrenheit (180EF.) and an end point not greater than three hundred fifty degrees Fahrenheit (350EF.). The prepared and primed base shall meet the requirements of the specification relating to such work at the time it is covered, regardless of when the primer is applied. The surface of the base shall be dry when the primer is applied, except in the case of emulsion primer.

Tack Coats

a. Tack coats shall be used at all cul-de-sacs and intersections.
c. Water soluble tack coat is to be used as curing compound on street patch SP-5 and may be cut with water.
b. The existing surface shall be free of all dust, loose material, grease or other foreign material at the time the tack is applied. Any excess surface oil on roadway or bituminous joint material will be removed by others without cost to the owner before the tack is applied.

The primer and tack coats shall be applied per the following table:

Material to be Treated	Application Usage	Type of Emulsion or Grade of Cutback	Application Rate (Gal/SY)	Application Temperature (°F)	Cure Time at 70°F
Existing Asphalt or Concrete Surface	Tack	RC-70	0.05-0.10	150-225	1-6 hrs
	Tack	SS-1 SS-1h CSS-1 CSS-1h	0.05-0.15	70-160	1-3 hrs
Treated Base, i.e. lime, fly ash cement	Prime	MC-30 MC-70	0.1-0.3	85-120	12-24 hrs
	Prime	SS-1 SS-1h CSS-1 CSS-1h	0.1-0.3	70-160	24-48 hrs
Untreated Aggregate Base w/ Fines	Prime	MC-30 MC-70	0.1-0.3	85-120	12-24 hrs

Material to be Treated	Application Usage	Type of Emulsion or Grade of Cutback	Application Rate (Gal/SY)	Application Temperature (°F)	Cure Time at 70°F
Untreated Aggregate Base w/o Fines	Prime	MC-250	0.1-0.3	85-120	12-24 hrs
Untreated Aggregate Base	Prime	SS-1 SS-1h CSS-1 CSS-1h	0.1-0.3	70-160	24-48 hrs
	Prime	EAP, PAE, or PEP	0.1-0.3	60-160	12-24 hrs

Application of Prime Coat. Bituminous material shall be applied to the width of the section to be primed by means of a pressure distributor in a uniform, continuous spread. The subgrade shall be moistened before the prime is applied. The application rate shall be as specified in the Contract or as approved by the Engineer between 0.1 and 0.5 gallons per square yard. The primer shall be heated at the time of application to a temperature in accordance with the limits provided in the table above, or as specified in the Contract.

Care shall be taken that the application of bituminous material at the junctions of spreads is not in excess of the specified quantity. Building paper shall be placed over the end of the previous applications and the joining application shall start on the building paper. Building paper used shall be removed and satisfactorily disposed of. Pools of primer material remaining on the surface after the application shall be removed. The primer shall be properly cured and the primed surface shall be cleaned of all dirt and surplus sand, before the next course is placed.

When traffic is maintained, not more than one half of the width of the section shall be treated in one application and one-way traffic will be permitted on the untreated portion of the roadbed. As soon as the bituminous material has been absorbed by the surface and will not pick up, traffic shall be routed to the treated portion and the remaining width of the section will be primed. The primer shall be properly cured, and the primed surface shall be cleaned of all dirt and surplus sand before the next course is placed. The prime coat for non-absorbent surfaces may be applied full width, provided the primed surface including entrances and side streets is blotted with sand in such quantity as directed by the Engineer before it is opened to traffic.

Primer shall be applied only when the atmospheric temperature is above fifty degrees Fahrenheit (50°F.), and when ground and other conditions are favorable. It shall be the Contractor 's responsibility to maintain or restore the completed primed surface in such a manner that a smooth, uniform surface will be available for the next course.

Application of Tack Coat. Asphalt emulsion shall be applied uniformly with a pressure distributor at the rate specified in the table above, as specified by the Contract, or as revised by the Engineer to be within a minimum of 0.05 and a maximum of 0.15 gallons per square yard. Water may be added to the asphalt emulsion and mixed therewith in such proportion that the

resulting mixture will contain not more than 50% of added water, the quantity of added water to be approved by the Engineer. The application of the resulting mixture shall be such that the original emulsion will be spread at the specified rate. The asphalt emulsion shall be heated at the time of application to a temperature in accordance with the above table. The tack shall be properly cured and the tacked surface shall be cleaned of all dirt and surplus sand before the next course is placed.

223.5. Method of Measurement. Measurement of bituminous material to the nearest ten (10) gallons will be made as specified in Section 220.2, Measurement of Liquid Bituminous Materials.

Measure of material for sanding primer will be made to the nearest ton, weighed in the vehicle at such location as may be directed by the Engineer.

223.6. Basis of Payment. Payment for bituminous material will be made at the Contract unit price per gallon.

Payment for furnishing and spreading sand on the primed surface will be made at Contract unit price per ton. Payment will be made under:

Item 223.1. Primer, per gallon.
Item 223.2. Sanding primer, per ton.

SECTION 225

BITUMINOUS PLANT MIX

225.1. Description. Bituminous plant mix, shall consist of a mixture of mineral aggregate and bituminous binder prepared in a stationary plant.

225.2. Materials.

225.2.1. Performance graded binder shall conform to the City of Columbia Specifications, Section 220, Bituminous Materials.

225.2.2. Graded Aggregate shall conform to, specifications for aggregate used by all departments of the City of Columbia.

225.2.3. The type of bituminous material and grade of aggregate will be specified in the Contract. In addition to the above requirements, any bituminous material used shall perform satisfactorily when mixed with the aggregate. It shall coat the aggregate, resist the washing action of water, and set to the satisfaction of the Engineer.

SECTION 226

PLANT MIX BITUMINOUS STABILIZED BASE
(Divided Aggregate Type)

226.1. Description. Plant mix bituminous stabilized base, divided aggregate type, shall consist of mineral aggregate and bituminous binder prepared in a stationary plant by separating the aggregate into two (2) or more fractions and recombining in the mixer. The mixture shall be placed on a prepared subgrade in conformity with the line, grade, and section shown on the plans. Placing and compaction shall conform with the requirements of Section 222 – Asphaltic Concrete Pavement.

226.2. Materials.

226.2.1. All materials shall conform to the following sections of these specifications

Item	Section
Asphalt Binder, PG64-22 or per specs	220.3
Graded Aggregate	227
Mineral Filler	221.3

226.2.2. Aggregate shall consist of crushed limestone or dolomite, except as hereinafter permitted, and at the time of mixing with bituminous material, shall meet the following gradation requirements:

Passing 1 1/2 inch sieve	100%
Passing 1/2 inch sieve	60 - 90%
Passing No. 4 sieve	35 - 65%
Passing No. 10 sieve	25 - 50%
Passing No. 40 sieve	10 - 35%
Passing No. 200 sieve	5 - 12%

At the option of the Contractor, fine aggregate conforming to the requirements of Section 221.2. may be incorporated into the mixture. The total amount of such fine aggregate shall not exceed thirty percent (30%) by weight of the combined aggregate and it shall be added at the asphalt plant by means of a separate cold aggregate feeder.

226.2.2.1. Prior to the start of bituminous work, the Contractor shall submit representative samples of aggregates and bituminous material intended for use, for purposes of determining the specific gravity of a laboratory compacted sample and the percentage of bituminous material to be used. Upon approval of the materials submitted, the Contractor will be required to furnish the aggregate not only within the above specified ranges but as a further requirement it shall not vary from the approved gradation by more than the following tolerances:

Passing No. 8 sieve --	Plus or minus 5.0 percent
Passing No. 200 sieve --	Plus or minus 2.0 percent

226.2.3. The type of bituminous material will be specified in the Contract and the Engineer will designate the grade after examination of the mineral aggregates which the Contractor proposes to furnish.

226.2.4. The composition of the mixture shall be as directed by the Engineer and shall conform to the following limits by weight:

Total Mineral Aggregate	94-97%
Bituminous Material	3-6%

The Engineer reserves the right to make such charges in the proportions of bituminous material and aggregate which he considers necessary within the limits of the specifications. The amount of bituminous material in the mixture shall not vary from that specified by the Engineer by more than plus or minus 0.5 percent. The bituminous material and mineral aggregate shall result in a bituminous mixture which will be durable and retain satisfactory cohesion and stability in the presence of moisture. Chemical additions, approved by the Engineer, may be made to the bituminous material or to the mixture.

226.3. Equipment.

226.3.1. The plant used for the preparation of the mixture shall include cold aggregate feeders, rotary dryer, screens, storage bins with at least two (2) compartments for dried aggregate, thermometric equipment for registering the temperatures of aggregate and bituminous material, either scales or volumetric proportioning devices for controlling the quantity of each ingredient of the mixture, a twin shaft pugmill or other approved type of mixer, and any other equipment necessary to produce the mixture as specified.

226.3.2. Batch type plants shall be equipped with scales for accurately weighing each size of mineral aggregate. Scales for any weigh box or hopper may be either of the beam or springless dial type and shall be so designed that they may be maintained with a maximum tolerance of 0.4 percent of the net load applied. Beam type sales shall be equipped with a separate beam for each type of material to be weighed and with an accurate telltale dial. The bituminous material may be measured either by weighing or by metering devices capable of controlling the quantity to within one percent (1%) of the required amount. Suitable equipment shall be provided either by steam jacketing or other means, for maintaining the specified temperature of the bituminous material in the pipe lines, meters, weigh buckets and other parts of the bituminous material system.

226.3.3. Continuous mixing plants shall include a means for accurately proportioning each bin size of aggregate and mineral filler either by weighing or by volumetric measurement. When volume proportioning is used, the unit shall include a feeder mounted under the compartment bins. The flow of material from each bin shall be through an accurately calibrated orifice. The orifice shall be controlled by an adjustable gate and indicators shall be provided on each gate to show the opening in inches. The calibration of the gate openings shall be determined by weighed test samples.

226.3.3.1. When continuous mixing plants are used, the bituminous material shall be proportioned by volume through an approved asphalt metering pump. The asphalt shall be

sprayed on the aggregate as it is charged into the mixer. The aggregate proportioning unit and the asphalt metering pump shall be mechanically interlocked. This interlocking device shall be of a type that the quantity of either asphalt or aggregate can be positively adjusted and when the correct proportions are established the flow can be accurately controlled.

226.3.4. Test weights, scales, and other equipment necessary for calibration of the plant and for verifying the accuracy of proportions shall be furnished by the Contractor and shall be available at all times. The operation of the individual units of the plant shall be so coordinated and controlled that an accurately proportioned and uniform mixture complying with these specifications will be produced.

226.4. Construction Procedure.

226.4.1. The bituminous mixture shall be placed on a subgrade prepared as specified in Section 205.

226.4.2. Preparation of Bituminous Materials. The bituminous material used in the mixture shall be carefully heated, without damage by overheating, to a workable temperature within the range specified in Section 220.4., Application Temperatures for Bituminous Materials. If methods other than steam are used, the material shall be agitated continuously to prevent localized heating.

226.4.3. Preparation of Aggregate. The mineral aggregate shall be fed into the drier through approved aggregate feeders of any type which will control accurately the total and proportional feed. The drier shall be equipped with heating equipment which can be positively regulated and an efficient dust collecting system preventing the loss of fine material. The material collected shall be returned to the mixture at a uniform rate or wasted as approved by the Engineer. When the aggregate is furnished in more than one (1) fraction, each fraction shall be proportioned through a separate mechanical feeder. The dried and heated aggregate shall be screened into two (2) sizes on a screen having an opening not larger than the No. 4 nor smaller than the No. 10 sieve. Each size of aggregate shall be kept in a separate compartment of the storage bins until proportioned for mixing. The temperature of the aggregate, when delivered to the mixer, shall be within the same range as that specified for bituminous material in Section 220.4, for the type and grade of bituminous material being used. The absorbed moisture in the aggregate shall be reduced to such a quantity that there will be no segregation of material resulting from escaping water vapor in the prepared mixture.

226.4.4. Preparation of Mixture. The mineral aggregate, bituminous material, and mineral filler if required, shall be measured separately and accurately in the proportions directed by the Engineer. The ingredients of the mixture may be measured either by volume or by weight as specified herein. Mixing shall be done in either a batch type or continuous type pugmill mixer. The bituminous material and aggregate shall be mixed until all particles are uniformly coated. Dry mixing prior to the application of the bituminous material may be required to prevent the formation of dust balls. The mixing time shall be as specified in Section 222 for Batch Type Plants or for Continuous Mixing Plants. The mixing unit on batch type plants shall include a device which will govern the mixing time and maintain it constant unless a change is ordered by the Engineer. The final mixture, when discharged from the pugmill, shall be sufficiently workable to permit satisfactory placement. The temperature of the mixture shall not

vary more than twenty five degrees Fahrenheit (25EF.) from that designated by the Engineer and in all cases shall be within the same range as that specified for bituminous material in Section 220, for the type and grade of bituminous material being used.

226.4.5. Transportation, spreading, joints, and compaction shall be per Section 222 – Asphaltic Concrete Pavement.

226.4.6. Testing Pavement.

226.4.6.1. During construction, the Engineer will make as many tests as are necessary to assure that the course is being constructed of proper thickness, composition and density. At least one in situ density test shall be conducted per 300 linear feet of street pavement, and three 4" diameter core samples shall be taken per 500 linear feet of street pavement for the determination of the average pavement thickness. The Contractor will be required to cut samples of the compacted mixture from any course at locations designated by the Engineer and shall deliver them to the field laboratory in good condition. Samples may be obtained by either sawing with a power driven saw or by drilling four (4) inch diameter cores. Each sawed sample shall consist of a single piece of the pavement of the size designated by the Engineer but not larger than twelve (12) inches square. Each cored sample shall consist of three (3) cores. All samples shall be taken the full depth of the layer to be tested and shall consist of an undisturbed portion of the compacted mixture. The surface from which samples have been taken shall be restored by the Contractor not later than the next succeeding day of plant operation. Payment for sawing or drilling and delivering samples of compacted mixture from the pavement and replacement of the surface will be made at five dollars ($5.00) per sample.

226.5. Method of Measurement.

Method No. 1: Plant Mix Bituminous Stabilized Base, measured to the nearest ton (2000 pounds).

Method No. 2: Mineral aggregate, measured on a tonnage basis of two thousand (2000) pounds; bituminous material, measured to the nearest ten (10) gallons.

226.6. Basis of Payment.

226.6.1 The quantities, complete in place and accepted, will be paid for at the applicable Contract unit price, which payment shall be full compensation for preparation of subgrade, furnishing, hauling and placing all materials, compaction equipment, tools, labor and work incidental thereto. Payment will be made under:

Method No. 1: Item No. 226.1. Plant mix bituminous stabilized base, per ton
Method No. 2: Item No. 226.2. Mineral aggregate, per ton
Item No. 226.3. Bituminous material, per gallon

SECTION 227

GRADED AGGREGATE FOR BITUMINOUS MIX

227.1. Graded aggregate for bituminous mix shall consist of sound, durable rock particles, free from objectionable coatings. When the aggregate is tested in accordance with AASHTO T-96-58(C) (Los Angeles Abrasion), the percentage of deleterious substances shall not exceed the following values and the sum of percentages of all deleterious substances shall not exceed eight percent (8%):

Deleterious Rock	8.0%
Mud Balls and Shale Combined	2.0%
Clay	3.0%
Other Deleterious Substances	0.5%

227.2. The aggregate shall comply with the following requirements as specified in the proposal:

GRADE	KIND OF MATERIAL	PERCENTAGE PASSING BY WEIGHT							
		SIEVE SIZES							
		1"	3/4"	1/2"	3/8"	No. 4	No. 10	No. 40	No. 200
A	Gravel or Crushed Stone	100	90-100	65-85	...	40-65	25-50	10-30	0-5 or 5-10
B	Gravel	100	90-100	65-85	...	40-65	20-50	5-25	0-5 or 5-10
C	Crushed Stone	100	90-100	65-85	...	25-55	15-40	5-20	0-7
D	Gravel or Chat	...	100	80-100	...	40-65	20-55	8-25	0-5 or 5-10
E	Gravel or Chat	...	100	95-100	...	60-90	35-65	10-30	0-5 or 5-12
F	Gravel or Chat	...	...	100	75-100	50-80	25-50	7-25	0-5
G	Gravel, Chat or Crushed Stone	...	100	80-95	...	25-55	15-40	5-20	0-5 or 5-10
H	Crushed Stone	...	100	75-90	...	20-40	5-15	3-10	0-7
I	Crushed Stone	...	100	90-100	...	40-65	20-50	10-30	5-15

227.2.1. If Grade A, B, D, E or G is specified, the proposal may designate one or the other of the ranges of material passing the No. 200 sieve. If the range is not so designated, the Contractor shall notify the Engineer of the range he proposes to use in order that the proper bituminous binder may be specified.

SECTION 228

SUPERIOR PERFORMING ASPHALTIC PAVEMENT (SUPERPAVE) MATERIALS

228.1. Performance Graded Asphalt Binder.

228.1.1. Approval of Source. The Contractor shall obtain approval of the source of bituminous material from the Engineer before any shipments to the work are made.

228.1.1.2. Sampling, Testing and Acceptance Procedures. The supplier shall certify that bituminous material complies with the specification requirements.

228.1.1.2.1. Certification. The supplier shall furnish the truck driver a copy of the bill of lading, manifest or truck ticket that is to be available to the Engineer at destination prior to unloading. The Engineer at the source shall be furnished a copy. The bill of lading, manifest or truck ticket shall provide the following information regarding the shipment: type and grade of material; specific gravity at 60° F; net gallons; consignee; truck number; identification number; weight of truck before and after loading; destination; date loaded; name and location of the source; and a certification statement. The certification statement shall be signed by an authorized representative of the supplier and shall be substantially as follows:

> "This certifies that the bituminous material in this shipment complies with MoDOT or City of Columbia specifications for the grade specified and the weights shown hereon were obtained on MoDOT approved scales and are correct within the specified scale requirements."

228.1.1.2.2. Sampling. The Engineer may, at random, observe the sampling and testing of truck shipments and tanks and will select representative samples of the material being supplied for testing in the field or in a testing laboratory. When test results certified by the supplier are not representative of the material being shipped, the source approval will be withdrawn. A source may be reinstated when proof is furnished that the deficiency has been corrected and adequate controls are in effect to guarantee delivery of material meeting specifications.

228.1.1.2.3. Sampling Equipment. The supplier shall furnish the required sampling equipment and shall sample the truck under the direction of the Engineer. The supplier shall be responsible for keeping all sampling equipment clean and in good condition. Sampling devices on truck transports will be approved provided that an adequately insulated valve is used with a pipe or nipple inserted a suitable distance into the tank.

228.1.1.2.4. Truck Log. Each truck transport shall carry a log showing types of material and the dates hauled with respect to previous shipments, or the supplier shall furnish to the Engineer such information with respect to the previous load.

228.1.1.2.5. Intermediate Storage. Intermediate storage tanks for storage and transfer of material between the refinery or terminal and the point of acceptance shall be equipped for

sealing and shall be reserved for City of Columbia or MoDOT work. Use of any material from unsealed tanks will be subject to delay until material can be sampled, tested, and approved.

228.1.1.2.6. Other Transportation. At sources from which liquid bituminous material is being accepted by certification, the applicable requirements of the foregoing sections shall be followed for shipments of material in transportation units other than trucks. The certification and all information regarding each shipment shall be furnished to the Engineer at the source.

228.1.1.3. Proportioning and Blending Bituminous Material Constituents. All materials shall be properly proportioned and thoroughly blended in suitable tanks prior to delivery to transportation equipment, or material may be proportioned and blended by use of automatic proportioning equipment. All automatic-proportioning blenders shall meet the approval of the Engineer and shall be equipped with precision instruments, including electrically interlocked motors and automatic meters. Blending quantities of less than 8,000 gallons in tanks, or in tank trucks, will not be permitted.

228.1.1.4. Performance Graded Asphalt Binder. The grade shall be PG64-22 or as specified in the Contract.

228.1.2.1. Description. Performance graded asphalt binder shall be an asphalt-based binder produced from petroleum residue either with or without the addition of non-particulate organic modifiers.

228.1.2.2. Characteristics. Performance graded asphalt binder shall be in accordance with AASHTO M 320 for the grade specified, except as follows. AASHTO T 111, Inorganic Matter or Ash in Bituminous Materials, may be substituted for AASHTO T 44, Solubility of Bituminous Materials, at the specification value indicated. The direct tension test will be waived. The following additional requirements shall apply.

Binder Characteristics		
Absolute Temperature Spread Between Upper and Lower Temperature for PG Binder Grade[a]	Elastic Recovery[b], Percent, Minimum, AASHTO T 301	Separation Test[c], Percent Difference, Maximum, ASTM D 5976
86°C	-	-
92°C	55%	10%
98°C	65%	10%
104°C	75%	10%

a Temperature Spread = Upper PG Temperature minus Lower PG Temperature.
b Elastic recovery test to be performed on the residue from the Rolling Thin Film Oven Test at 25°C and 10 cm elongation.
c Separation test to be performed in accordance with ASTM D 5976 except test upper and lower portions as original binder for G* value according to AASHTO T 315.

228.1.2.3. Storage. Performance graded asphalt binder shall be furnished as a uniform mixture shipped directly to the project site from the asphalt binder supplier's permanent plant address or intermediate storage facility, suitable for direct use. Asphalt binder shall be capable of storage at the project site without separation or settling. Automatic blending will be

allowed, except no intermediate blending of asphalt binder and any other modifiers will be allowed at the project site.

228.1.2.4. Certification and Acceptance. Suppliers furnishing performance graded asphalt binders to City projects by certification shall be in accordance with AASHTO R26, except as noted herein.

228.1.2.5. Failure to Comply. Failure to fulfill any of these requirements may result in disqualification of the performance graded binder supplier. If a primary manufacturing facility is disqualified, all terminals shipping performance graded binder manufactured at the primary facility and who are not performing AASHTO M 320 specification compliance testing will automatically be disqualified. In cases of dispute, test results obtained by the City of Columbia will be considered referee and final.

228.1.3. Liquid Bituminous Materials. Suppliers furnishing liquid bituminous materials shall comply with the following. All truck shipments shall be loaded from approved storage tanks, which have been sampled, tested, and certified by the supplier to the Engineer. If automatic blending equipment is used, blender material will be approved for use provided the finished product complies with specifications. At least one complete test shall be conducted every 2 weeks on each grade of material furnished for City work from the blender. A certified copy of the test results shall be furnished to the Engineer. Sampling and testing for certification purposes shall be conducted prior to shipping material to City work. After loading, the supplier shall sample and make identifying tests on a sufficient number of truck shipments of material consigned to a construction project to ensure that proper quality control is being maintained and that all such shipments comply with the specification requirements. The identifying test is viscosity for liquid bituminous material. For all liquid bituminous material, AASHTO T 111, Inorganic Matter or Ash in Bituminous Materials, may be substituted for AASHTO T 44, Solubility of Bituminous Materials, at the specification value indicated.

228.1.4. Sampling and Test Methods for Performance Graded binder.

Property	Method
Sampling	AASHTO T 40
Water	AASHTO T 55
Flash Point (Cleveland Open Cup)	AASHTO T 48
Solubility in Trichloroethylene	AASHTO T 44
Dynamic Shear	AASHTO M 320
Rolling Thin Film Oven Test	AASHTO T 240
Pressure Aging Test	AASHTO R 28
Creep Stiffness	AASHTO T 313
Direct Tension	AASHTO T 314

228.1.5. Application Temperatures for Performance Graded binder.

Bituminous Material	Temperature, Degrees Fahrenheit			
	Spraying		Mixing	
Asphalt Binder	Min	Max	Min	Max
PG 64-22	260°	325°	---	---
All Other Grades	285°	350°	275°	350°

228.1.5.1. Application temperatures of other grades of emulsions will be as specified in the Contract.

228.1.5.2. The spraying temperature for non-modified PG 64-22 asphalt binder is 260° - 325° F and for all other higher temperature, non-modified performance grades is 285° - 350° F. The mixing and compaction temperatures for performance graded asphalt binder shall be determined by rotational viscosity testing as defined in AASHTO T 316.

228.1.5.3. When material to be applied by pressure distributor is, due to refining or blending procedures, delivered at a temperature above the specified limits, the material may be applied at the higher temperature provided satisfactory application can be obtained at the specified rate and provided sufficient precaution is exercised with respect to the fire hazard.

228.2. Coarse Aggregate.

228.2.1. All coarse aggregate shall consist of sound, durable rock, free from objectionable coatings. When the coarse aggregate is tested in accordance with AASHTO T 96 (Los Angeles Abrasion), the percentage of wear shall not exceed 45. Coarse aggregate tested in accordance with AASHTO T 327 Micro Deval Abrasion Test the percent loss shall not exceed 21. The percentage of deleterious substances shall not exceed the following values and the sum of percentages of all deleterious substances shall not exceed 8 percent.

Item	Percent by Weight
Deleterious rock	8.0
Shale	1.0
Other foreign material	0.5

The requirements of this section apply to each size or fraction of aggregate produced.

228.2.2. Crushed porphyry aggregate meeting the approval of the Engineer shall be a uniform product, furnished in one or more fractions. When special asphaltic concrete mixture porphyry & limestone (LP) is specified, the total crushed porphyry aggregate shall be uniformly graded and shall have material passing each sieve from the maximum size aggregate through the number 200 sieve. Total aggregate gradations consisting of essentially one size aggregate will not be permitted.

228.2.3. Steel slag aggregate meeting the approval of the Engineer shall be a uniform product, furnished in one or more fractions. Steel slag consisting principally of a fused

mixture of oxides and silicates is a synthetic aggregate produced as a by-product of basic oxygen, electric or open-hearth steel making furnaces. The steel slag shall be aged at least 3 months after crushing and screening. Material that is screened after it has been crushed, initially screened, and aged 3 months, will not be required to receive additional aging. Steel slag from one source shall not be mixed with or used with steel slag from a different source. When special asphaltic concrete mixture slag & limestone (LS) is specified, the total steel slag aggregate shall be uniformly graded and shall have material passing each sieve from the maximum size aggregate through the number 200 sieve. Total aggregate gradations consisting of essentially one size aggregate will not be permitted.

228.2.4. When a density requirement is specified for asphaltic concrete, the total quantity of chert in each size or fraction of produced crushed stone aggregate, including that permitted as deleterious, shall not vary more than 10 percent from the quantity present in the aggregates used in the approved laboratory job mixtures.

228.2.5. Gravel aggregate shall be washed sufficiently to remove any objectionable coating. Gravel aggregate for SP190 mixtures shall be crushed from gravel that has a maximum of 10 percent passing a 1-inch sieve. Gravel aggregate for SP125 mixtures shall be crushed from gravel that has a maximum of 10 percent passing a ¾-inch sieve. Crushed gravel shall comply with the requirements for mechanically induced faces in Section 228.2.8.

228.2.6. Pile-run chat will not be approved for use in asphaltic concrete unless the chat has been conditioned to meet a specific gradation. A tolerance of 7 percent, plus or minus, on each sieve fraction will be permitted providing the aggregate complies with other provisions of this specification.

228.2.7. Coarse Aggregate Angularity. Coarse aggregate angularity is measured on the coarse portion of the blended aggregate. It is defined as the percent by weight of the aggregate particles larger than the Number 4 sieve with one or more fractured faces. A fractured face is an angular, rough or broken surface of an aggregate particle created by crushing or other artificial means. When tested in accordance with ASTM D 5821, "Standard Test Method for Determining the Percentage of Fractured Particles in Coarse Aggregate", the coarse aggregate shall meet the following criteria. As shown, the criteria denotes the minimum allowable percentage of the coarse aggregate with "one / two" fractured faces, e.g. an "85 / 80" requirement means that the coarse aggregate shall have a minimum of 85 percent particles by weight with one fractured face and a minimum of 80 percent particles by weight with two fractured faces.

Design Level	Mixture Depth from Surface	
	4 inches	> 4 inches
F	55/-	-/-
E	75/-	50/-
C	95/90	80/75
B	100/100	95/90

228.2.8. Flat and Elongated Particles. When tested in accordance with ASTM D 4791, no more than 10 percent by mass of the blended aggregate particles retained on the number 4 sieve shall have a ratio of maximum to minimum dimensions greater than five. This applies when design traffic Equivalent Single Axel Loads (ESALs) are greater than 1,000,000.

228.2.9. Absorption. The absorption value of the aggregate used shall not exceed 4.0 percent measured by weight.

228.2.10. Soundness. When testing in accordance with AASHTO T 104, the loss of coarse aggregate in 5 cycles of the accelerated soundness test shall not be greater than 12 percent when sodium sulfate is used. Contractor shall furnish Engineer test results a minimum of 10 calendar days prior to the intended time of use. A soundness test taken on aggregate sampled from a well-defined quarry ledge or gravel pit may be considered to represent that entire ledge or pit, and any fine or coarse aggregate fractions from that ledge or pit. Should any change in ledge or pit characteristics be observed, retesting might be required at the discretion of the Engineer.

If approval of a stockpile is requested, the stockpile shall contain material for five days of the intended usage or 500 tons, whichever is greater. No material shall be removed from or added to the stockpile during the testing period. Unapproved material shall be segregated from approved materials in stockpiles at all times.

This specification shall not apply to siliceous sands from the Missouri River.

228.3. Fine Aggregate.

228.3.1. Fine aggregate for asphaltic concrete shall be a fine, granular material, naturally produced by the disintegration of rock of a siliceous nature and/or manufactured by the mechanical reduction of sound durable rock with a percentage of wear not exceeding 45 when tested in accordance with AASHTO T 96. With written approval of the Engineer and compliance with this specification, chat sand produced from flint chat in the Joplin area, dolomite chat sand as produced in the southeast lead belt area, fines manufactured from igneous rock and chert gravel, or wet bottom boiler slag may be used as fine aggregate for asphaltic concrete. Fine aggregate shall be free from cemented or conglomerated lumps and shall not have any coating or injurious material. The percentage of deleterious substances shall not exceed the following values:

Item	Percent byWeight
Clay lumps and shale	1.0
Total lightweight particles, including coal and lignite	0.5
Other deleterious substances	0.1

Lightweight sand particles are not considered deleterious lightweight particles. The total lightweight particles requirement shall not apply to wet bottom boiler slag, angular chert sand, or manufactured sand.

228.3.2. Fine Aggregate Angularity. When, in accordance with AASHTO T 304 Method A, aggregate particles passing the number 8 sieve shall meet the following criteria for the minimum percent air voids in loosely compacted fine aggregate. Fine aggregate angularity is measured on fine portion of the blended aggregate.

Design Level	Mixture Depth from Surface	
	≤4 inches	> 4 inches
F	-	-
E	40	40
C	45	40
B	45	45

228.3.3. Fine aggregates manufactured by the mechanical reduction of sound durable rock shall be manufactured from ledges that meet the same soundness requirements as for the coarse aggregate.

228.3.4. Clay Content. When tested in accordance with AASHTO T 176, aggregate particles passing the number 4 sieve shall meet the following sand equivalent criteria:

Design Level	Sand Equivalent Minimum, Percent
E, F	40
C	45
B	50

228.4. Mineral Filler. Mineral filler shall consist of limestone dust, Portland cement, or other suitable mineral matter. It shall be thoroughly dry and free of lumps consisting of aggregations of fine particles. When tested by means of laboratory sieves in accordance with AASHTO T 37, the mineral filler shall conform to the following requirements:

Sieve Size	Percent Passing By Weight
Number 30	100
Number 50	95 - 100
Number 100	90 - 100
Number 200	70 - 100

228.5. Hydrated Lime. Hydrated lime shall be thoroughly dry and free of lumps. Hydrated lime produced from limestone shall comply with ASTM C 206, Type N or S. Hydrated lime produced from dolomite shall comply with ASTM C 206, Type S. The plasticity requirements of ASTM shall not apply to either Type N or S, and the gradation shall be determined in accordance with AASHTO T 37.

228.6. Liquid Anti-Strip Additives. Liquid anti-strip additives shall not be detrimental to the bituminous mixture. Anti-strip additives shall meet the following requirements or be approved by the Missouri Department of Transportation.

228.6.1. Physical Properties. Amine-type liquid anti-strip additives that are physically mixed with the asphalt binder will be classified as Type I. Latex-type liquid anti-strip

additives that are applied to the aggregate will be classified as Type II. The following physical properties shall be determined for each type.

228.6.1.1. Type I Liquid Anti-Strip Additives.

Test	Test Method
Specific Gravity at 77°F	AASHTO T 228
Brookfield Viscosity 77°F using an RVT viscometer. The report shall include the corresponding test temperature, speed, spindle and model of instrument.	ASTM D2196
Pensky-Martens Closed Cup Flash Point or Cleveland Open Cup Flash Point	ASTM D93 AASHTO T 48
Infrared Spectrum (neat material)	Appropriate Method

228.6.1.2. Type II Liquid Anti-Strip Additives.

Test	Test Method
Weight Per Gallon at 77°F	ASTM D1475
Brookfield Viscosity 77°F using an RVT viscometer. The report shall include the corresponding test temperature, speed, spindle and model of instrument.	ASTM D2196
pH	Appropriate Method
Percent Solids	ASTM D1644
Method A Infrared Spectrum (latex portion)	Appropriate Method

228.6.2. Heat Stability. The additive shall be stable and shall not separate under all manufacturer listed storage and use temperatures. When Type I or Type II additives are blended with the proposed bituminous material to be used at the anticipated application rate, the blended material shall still meet all bituminous material specifications and shall be heat stable. Heat stability shall be established by comparing AASHTO T 283 specimens made by preparing three conditioned specimens using aged, blended material that has been held at 325°F for 96 hours and three conditioned specimens using fresh blended material.

The average tensile strength of conditioned specimens using aged material shall be compared with conditioned specimens made with fresh blended material. If the average conditioned strength of the mixture with aged material is less than 90 percent of the mixture with fresh blended material, the anti-strip additive will not be permitted for use. This requirement will also apply if tested on any specific mix design using the approved anti-strip additive.

228.6.3. Unconditioned Strength. The anti-strip additive shall not significantly lower the unconditioned strength of AASHTO T 283 specimens. This shall be determined by preparing an additional six unconditioned specimens, three with and three without the liquid anti-strip additive. The average tensile strengths of unconditioned specimens shall be compared with specimens with and without the liquid anti-strip additive. If the average unconditioned strength

of the mixture with the additive is less than 90 percent of the mixture without the additive, the anti-strip additive will not be permitted for use in that bituminous mixture.

228.6.4. Documentation. The manufacturer shall submit a certification and guarantee to Engineer prior to initial approval showing the brand name and designation, the composition or description of the anti-strip liquid, and the manner in which the material will be identified on the containers. The manufacturer shall certify that the material is in accordance with this specification and shall list typical values of current tests for the properties listed in Section 228.6.1. A copy of the bituminous mix design used to test for heat stability and unconditioned strength shall be included with the test results. The certified test report shall show the manufacturer's name, brand name of material, lot and date tested.

228.6.5. Packaging and Marking. The containers in which anti-strip liquids are delivered shall be plainly marked with the manufacturer's name, the brand name and designation of the material, lot number and net quantity. Bulk shipments shall be accompanied by a delivery ticket showing this information.

SECTION 229

SUPERIOR PERFORMING ASPHALTIC PAVEMENT (SUPERPAVE)

229.1. Description. This work shall consist of providing a Superpave asphaltic concrete mixture (Type SP95, Type SP125, Type SP125LP, Type SP125LS or Type SP190) to be placed in one (1) or more courses on a prepared base or underlying course in conformance with the lines, grades, thicknesses, and typical cross sections shown on the plans, or established by the Engineer.

229.1.1. Superpave asphaltic concrete mixtures are dense, graded asphaltic concrete mixtures compacted in the Laboratory with a Superpave Gyratory Compactor. The materials laboratory shall be an independent testing laboratory. The gyratory compactor shall meet the requirements of AASHTO T312. The Contractor shall be responsible for QC (Quality Control) of the bituminous mixture, including the design, and control of the quality of the material incorporated into the project.

229.1.2. Nomenclature of Superpave (SP) Asphaltic Concrete Mixtures. The nomenclature of Superpave (SP) asphaltic concrete mixture is as follows:

The design traffic level of the project is expressed in 18,000 lb. Equivalent Single Axle Loads or ESALs. For convenience, the aggregate size is shown, e.g. SP125. The 125 represents the 12.5 mm (1/2") nominal maximum aggregate size. The next information shall be the binder performance grade (PG), e.g. SP125 (76-22). The "76" represents the design high and "-22" the design low temperature in degrees Celsius and would be read "PG 76 minus 22". The base Performance Grade binder is a PG 64-22. For slow moving design loads, 12 to 45 Miles per hour, or for design traffic between 10 million and 30 million ESALs, the binder selection shall be one temperature grade higher to a PG 70-22. For standing design loads, less than 12 Miles per hour, or for design traffic exceeding 30 million ESALs, the binder selection shall be two temperature grades higher to a PG 76-22. Following the binder grade will be a letter that represents the 20-year Design Traffic ESALs, e.g. SP125 (PG 76-22) E. The E corresponds to a Design Traffic Level of □3,000,000 ESALs.

229.1.3. The following cumulative ESALs shall be utilized for the specified Superpave mixture design:

Design Level	Design Traffic (ESALs)
F	<300,000
E	300,000 to <3,000,000
C	3,000,000 to <30,000,000
B	≥30,000,000

229.2. Materials. All materials shall conform to Section 228 – Superior Performing Pavement (Superpave) Materials.

Item	Section
Asphalt Cement (PG Grade)	228.1
Coarse Aggregate	228.2
Fine Aggregate	228.3
Mineral Filler	228.4
Hydrated Lime	228.5
Anti-Strip Additive	228.6

The grade of asphalt cement will be specified in the Contract.

229.3. Composition of Mixtures.

229.3.1. Prior to mixing with asphalt cement, the total aggregate, including the filler if needed, shall meet the following gradation for the type of mixture specified in the Contract. Maximum size is defined as one (1) sieve size larger than the nominal size. Nominal size is defined as one (1) sieve larger than the first sieve to retain more than 10 percent by weight.

229.3.1.1. A job mix formula may be approved which permits the combined aggregate gradation to be outside the limits of the master range when the full tolerances specified herein are applied.

Percent Passing by Mass			
Mixture	SP190 3/4 in. (19.0 mm)	SP125 1/2 in. (12.5 mm)	SP95 3/8" (9.5 mm)
Sieve Size	(Nom. Max. Size)	(Nom. Max. Size)	(Nom. Max. Size)
1 in.	100	---	---
3/4 in.	90-100	100	---
1/2 in.	90 max.	90-100	100
3/8 in.	---	90 max.	90-100
No. 4	---	---	90 max.
No. 8	23-49	28-58	30-60
No. 200	2-8	2-10	2-10

229.3.1.2. Anti-Strip Agent. An anti-strip will be allowed by the Engineer to improve resistance to stripping.

229.4. Job Mix Formulas. At least 30 days prior to placing any mixture on the project, the Contractor shall submit a mix design for approval to the Engineer. The mixture shall be designed in accordance with AASHTO R-35 and shall be tested in accordance with AASHTO T 312 except as noted herein. A detailed description of the mix design process shall be included with the job mix formula (JMF). The Engineer may request representative samples of each ingredient for the mixture be submitted with the mix design.

229.4.1. Required Information. When a mix design is designated for a specific project, the Project Name, City Project Number and Federal Job Number (if applicable) on which the mixture will be used shall be specified. All mix designs shall contain the following information:

1. Source, grade, and specific gravity of asphalt binder.
2. Source, type (formation, etc.), ledge number, if applicable, and gradation of the mineral aggregates. The gradation of the component materials shall be representative of the material at the time of use.
3. Bulk and apparent specific gravities and absorption of each aggregate fraction in accordance with AASHTO T 85 for coarse aggregates and AASHTO T 84 for fine aggregates.
4. Specific gravity of hydrated lime or mineral filler, if used, in accordance with AASHTO T 100.
5. Percentage of each aggregate component.
6. Combined gradation of the job mixture.
7. Percent asphalt binder, by mass, based on the total mix intended to be incorporated in the completed mixture, shown to the nearest 0.1%.
8. Bulk specific gravity (G_{mb}), by AASHTO T 166 Method A, of a laboratory compacted mixture compacted N_{design} gyrations.
9. Percent air voids (V_a) of the laboratory compacted specimen compacted to N_{design} gyrations.
10. Voids in the mineral aggregate (VMA) and voids in the mineral aggregate filled with asphalt binder (VFA) at N_{design} gyrations.
11. Theoretical maximum specific gravity (G_{mm}) as determined by AASHTO T 209 after the sample has been short term aged in accordance with Section 229.5.3.
12. The tensile strength ratio as determined by AASHTO T 283 including all raw data.
13. The gyratory sample weight (mass) to produce a 115 mm minimum height specimen.
14. Mixing temperature and gyratory molding temperature.
15. The Design Traffic Level and Number of gyrations $N_{initial}$, N_{design}, & $N_{maximum}$.
16. Dust proportion ratio (No. 200 / Effective asphalt binder (P_{be})).
17. Bulk specific gravity (G_{sb}) of the combined aggregate.
18. Percent chert contained in each aggregate fraction.
19. Percent of Theoretical maximum specific gravity (G_{mm}) at $N_{initial,}$ & $N_{maximum}$
20. Blended aggregate properties for clay content and angularity.
21. Baghouse fines added for design.
    a. Batch and continuous mix plants – Indicate which aggregate fraction to add baghouse percentage during production.
    b. Drum mix plants – Provide cold feed settings with and without baghouse percentage

229.4.1.2. Approval. No mixture will be accepted for use until the job mix formula for the project is approved by the Engineer

229.4.1.3. The job mix formula shall be within the master range specified for the particular type of asphaltic concrete, and shall include the type and sources of all materials, the gradations of the aggregates, the relative quantity of each ingredient, and shall state a definite percentage for each sieve fraction of aggregate for asphalt cement.

229.4.1.4. Job Mix Formula Modification. The job mix formula approved for each mixture shall be in effect until modified in writing by the Engineer. When unsatisfactory results or other conditions occur, or a source of material has been changed, a new job mix formula may be required.

229.5. Mixture Testing Procedures.

229.5.1. Superpave asphaltic concrete mixtures shall be tested by an approved independent testing laboratory in accordance with AASHTO T 312, Standard Method for Preparing and Determining the Density of Hot Mix Asphalt (HMA) Specimens by Means of SHRP Gyratory Compactor. All costs for testing shall be borne by the Contractor and included in the unit price.

229.5.2. SP mix design shall follow the procedures defined in AASHTO R-35, except as follows:

229.5.2.1. Once the optimum asphalt content of the mixture has been determined, a minimum of two specimens shall be prepared at the optimum asphalt content and compacted to the respective $N_{maximum}$ values. The average specimen density shall then be calculated, compared against the requirement at $N_{maximum}$ and furnished with the job mix data for informational purposes only.

229.5.3. Compaction temperature for Modified Binders will be furnished by the supplier. Compaction temperature for unmodified Binders will be determined where the unaged Binder has a Kinematic Viscosity of 0.28 ± 0.03 mm^2/Section Pa-s measured in accordance with ASTM D 4402.

229.5.4. The Contractor is advised that SP mix design will require gradation design, asphalt binder content design, moisture susceptibility testing, and nuclear gauge or ignition oven calibration. It may also require testing of the blended aggregate once the mixture design is completed.

229.6. Compaction Criteria.

229.6.1. The number (N) of gyrations required for gyratory compaction shall be as follows:

Design Level	Gyrations		
	$N_{Initial}$	N_{Design}	$N_{Maximum}$
F		50	
E	7	75	115
C	8	80-100	160
B	9	125	205

229.6.2. When compacted in accordance with AASHTO T-312, the mixture shall meet the following criteria:

229.6.2.1. Air Voids (V_a).

Design Level Design Air Voids (Percent)
All levels.....4.0

229.6.2.2. Voids in the Mineral Aggregate (VMA).

Mixture VMA Minimum (Percent)
SP190.....13.0
SP125.....14.0
SP95.....15.0

229.6.2.3. Voids Filled With Asphalt (VFA).

Design Level	VFA (Percent)
F	70-80
E	65-78
B, C	65-75

Required Density (Percent of Theoretical Maximum Specific Gravity)			
Design Level	Less than $N_{initial}$	Equal to N_{design}	Less than $N_{maximum}$
F	91.5	All levels 96.0	All levels 98.0
E	90.5		
B, C	89.0		

Final in-place density shall be 94.5% ±2.5%. SMA mixes shall have a minimum in-place final density of 94.0%,

229.7. Other Criteria.

229.7.1. Dust to Binder Ratio. The ratio of the aggregate passing the No. 200 to effective asphalt binder (P_{be}) content shall be between 0.8 and 1.2 for aggregate gradations that pass above the boundaries of the restricted zone specified in Section 229.3. Aggregate

gradations that pass below the boundaries of the restricted zone shall have a ratio of the aggregate passing the No. 200 sieve to effective asphalt binder (P_{be}) content between 0.6 and 1.6.

229.7.2. Tensile Strength Ratio. The mixture shall have a tensile strength ratio (TSR) greater than 80 percent when tested in accordance with AASHTO T 283. Specimens for AASHTO T 283 shall be 6 inches in diameter and be compacted to a 3-3/4" height with 7 ± 0.5% air voids. If the strength ratio is less than 80%, remedial action, such as the use of anti-strip agents, is required to improve the moisture susceptibility of the mix. When remedial agents are used to modify the asphalt binder, retest the mix to assure compliance with a minimum TSR greater than 80%.

229.7.3. Blended Aggregate. The blended aggregate shall meet the grading for the specified SP mixture.

229.7.3.3. For Superpave mixtures, Recycled Asphaltic Pavement (RAP) and Recycled Asphalt Shingles (RAS) will be used in accordance with Section 221.4

229.7.3.4. Crushed gravel shall not exceed 20% by weight of the plus No. 8 mineral aggregate.

229.7.4. If difficulty is experienced in obtaining a satisfactory mixture with the aggregate combinations submitted, the Contractor will be advised and new types or sources of materials may be required by the Engineer. Additional aggregate, other than local stone or sand, may be required in order to modify the mixture for compliance.

229.7.5. The total aggregate for Asphaltic Concrete mixtures shall contain not less than 85% crushed material. Natural fine aggregate shall be limited to a maximum of 15% of the total aggregate in Asphaltic Concrete mixtures. The Engineer will adjust quantities of the various components of the mixture as necessary to obtain the required characteristics of the mixture.

229.8. Gradation Control.

229.8.1. In producing mixtures for the project, the plant shall be operated so that no intentional deviations from the job-mix formula are made. Mixtures as produced shall be subject to the following tolerances and controls:

1. The percent passing the first sieve size smaller than the nominal maximum size shall not exceed 92.0 percent,

2. The maximum variation from the approved job-mix formula shall be within the following tolerances:

Sieve (Percent Passing by Mass)	Max. Tolerance, Percent
No. 8	2.0
No. 200	Range of Table in Sec 229.3.1.1.

3. The quantity of asphalt cement introduced into the mixer shall be that quantity specified in the job-mix formula. No change may be made in the quantity of asphalt cement specified in the job-mix formula without written approval of the Engineer. The quantity of asphalt cement determined by calculation or tests on the final mixture shall not vary more than ±0.3 percentage point from the approved job-mix formula.

4. One of the aggregate bin sizes produced by the screening unit shall contain not more than 15% by weight retained on the No.8 sieve.

229.8.1.1. The gradation of the aggregates will be determined from samples taken from the hot bins on batch-type plants or from the composite cold feed belt on drum mix plants.

229.8.2. Preparation of Mixture. The asphalt cement shall be carefully heated, without damage by overheating, to a workable temperature as designated by the Engineer within the range established by Section 228. If asphalt is measured by volume, the temperature of the asphalt at the time of measuring shall not vary more than 15°F from that designated by the Engineer when the metering device was calibrated. The final mixture shall not exceed 350°F when discharged from the pug mill, and shall not vary more than 25°F from the temperature designated by the Engineer. The final mixture shall not be crusted over, contain lumps, or be contaminated with deleterious agents such as unburned fuel, objectionable fuel residue, or any other material not inherent to the job-mix formula. In cases of rejected material, the entire load shall be rejected.

229.8.3. The asphaltic concrete mixture, when sampled immediately behind the paver and tested in accordance with AASHTO Test Method T 110, shall not contain more than 0.5% moisture by weight of the mixture.

229.9. Recompacted Mixture. When the produced mixture is recompacted using the Superpave Gyratory Compactor, the mixture shall meet the following criteria:

229.9.1. Voids in the Mineral Aggregate. The Voids in the Mineral Aggregate (VMA) shall be within –0.5 and +2.0% of the minimum required for each type of mixture N_{design} gyrations. The VMA will be determined using the field determined bulk specific gravity's (AASHTO T 166) of the two Superpave gyratory compacted specimens, the field calculated percent aggregate, the job mix formula aggregate bulk specific gravity and the field measured percent asphalt as determined by one of the following methods: AASHTO T 287 Nuclear gauge method; AASHTO T 164 Quantitative Extraction of Bitumen from Bituminous Paving Mixtures; or by AASHTO T 308 Method A-Standard Test Method for Determining Asphalt Content of Hot Mix by the Ignition Method.

229.9.2. Air Voids. The air voids (V_a) shall be within ±1.0% of the approved job mix formula at N_{design} gyrations. The air voids will be calculated from the field determined maximum specific gravity's (AASHTO T 209) and the field determined bulk specific gravity's (AASHTO T 166).

229.9.3. Adjustments to $N_{initial}$ and $N_{maximum}$ shall be made as N_{design} changes. As the air voids (V_a) percentage increases above 4%, the difference should be deducted from both $N_{initial}$ and $N_{maximum}$. When the air voids (V_a) percentage decreases below 4%, the difference should be added to both $N_{initial}$ and $N_{maximum}$.

229.9.4. On each follow-up field test, two specimens will be compacted to N_{design}.

229.9.5. Should any of the mixture properties specified in Section 229.8, 229.9, or 229.17.4 be found to be outside of the prescribed tolerances, a second test shall be run immediately. Should the second test confirm the findings of the initial test, production of the asphaltic concrete mixture will be suspended until adjustments are made and passing test results have been achieved. Repeated instances of non-conformance may result in suspension of production and redesign of the asphaltic concrete mixture.

229.10. Field Adjustments of Job Mix Formulas.

229.10.1. When test results indicate the mixture produced does not meet the specification requirements the Contractor may field adjust the job mix formula as noted herein. Field adjustments may consist of changing the percentages of the aggregate fractions as listed on the approved job mix formula by no greater than a total of 5.0% and changing the percent binder as listed on the approved job mix by 0.3%. Additional fractions of materials or new materials will not be permitted as field adjustments. The Engineer shall be notified immediately when any change is made in the cold feed settings, the hot bin settings, and/or the binder content. When the aggregate percentages are adjusted by more than a total of 5.0% and/or the binder content is adjusted more than 0.3%, a new mix design shall be established.

229.10.2. When a field adjustment is allowed, the Contractor will be permitted to place not more than 750 tons of mixture, once the adjustment is made, to establish new volumetric properties of the mixture and to verify the mixture meets the specification requirements of Section 229.6.2. The field adjusted job mix formula combined gradation and combined aggregate bulk specific gravity (G_{sb}) shall be calculated accordingly to reflect any change in the percentages of the aggregate fractions. The maximum theoretical specific gravity of the mixture (G_{mm}), the bulk specific gravity of the compacted specimens at N_{design} (G_{mb}), the VMA, the percent filled (VFA), the dust proportioning ($-200/P_{be}$), and the percent asphalt binder targets will be established by sampling the material from the roadway after 100 tons have been produced.

229.10.3. A minimum of two (2) specimens will be compacted to N_{design} gyrations. The maximum theoretical specific gravity of the mix, percent asphalt binder of the mix and the cold feed gradations shall be determined. The volumetrics of the field adjusted mix shall be calculated from these test results. The average values of the volumetrics from the N_{design} gyratory compacted specimens will be used to establish the new volumetric targets of the mix.

229.10.4. The new volumetric targets of the mix shall be in compliance with all of the Superpave mix design requirements of Section 229.6.2. Mixture not meeting the

specification requirements shall be removed from the roadway at the Contractor's expense. After this procedure has established the field adjusted job mix formula that complies with Section 229.6.2 requirements, the Contractor may continue paving operations using the field adjusted job mix formula.

229.10.5. To keep accurate records, the original job mix formula will be labeled with a revision number consecutively numbered beginning with (R1) behind the last digit of the job mix formula number to signify that the job mix formula has been field adjusted.

229.10.6. Supporting data justifying the need and type of field adjustment shall be submitted to the Engineer. The Engineer will approve all field adjustments. The Contractor must notify the Engineer in writing of the adjustments made, new target values and any other information required for evaluation of the revised mix.

229.10.7. The Contractor shall submit the field adjusted job mix formula to the Engineer in writing within 24 hours.

229.10.8. Field Mix Redesign. When a new mix design is required, the Contractor will be permitted to establish the new mix design in the field. The mix shall be designed in accordance with Section 229.5 and shall meet the Superpave mix design requirements of Section 229.6 and 229.7. A representative sample of the mix shall be submitted with the new mix design to the Materials Laboratory for mixture verification. The amount of mix submitted for verification shall weigh at least 50 lb.

229.10.8.1. New mix designs established in the field will be approved by the Materials Laboratory. To keep records straight, the Materials Laboratory will assign a new mix number to the mixture.

229.10.8.2. No mix is to be placed on the project until the new field mix design is approved.

229.11. Test Strips.

229.11.1. Description. This work shall consist of constructing a test strip of Superpave asphaltic concrete pavement to determine the volumetric properties of the mixture and the compactive effort necessary to provide the specified density.

229.11.2. Construction Requirements. Test sections shall be constructed after approval of a job-mix formula and calibration of the hot mix asphalt (HMA) plant. Prime or tack coat, if specified, shall be applied to the roadbed section followed by the placement of no more than 400 tons of approved mix in a single lane within the project limits. The paver and rollers to be used on the project shall be used to put down the test strip. Separate test strips shall be provided for each mix design using the thickness specified on the typical section. Test strips for subsequent lifts, which incorporate a new mix design may, at the Contractor's option, be placed after completion of the previous lift.

229.11.2.1. Density will be determined in accordance with Section 229.20 of the standard specifications. If necessary, additional test strips shall be constructed until a rolling

pattern has been established which will provide the specified density. A new test strip shall also be required whenever a change in the job-mix formula occurs, the compaction method or the compaction equipment is changed or unacceptable results occur. Test strips, which do not have the specified density, shall be removed as directed by the Engineer. No additional mix shall be laid until a rolling pattern, acceptable to the Engineer, has been established on a test strip.

229.11.2.2. Volumetric properties will be determined in accordance with Section 229.9 of the standard specifications. If necessary, additional test strips shall be constructed until the acceptable voids, voids in mineral aggregate (VMA) and void filled with asphalt (VFA) have been meet. A new test strip shall also be required whenever a change in the job-mix formula occurs or unacceptable results occur.

229.11.3. Full production shall not start until an acceptable test strip meeting density, gradation, percent asphalt binder, and the volumetric requirements of the Contract has been obtained.

229.11.4. Test strips which do not meet specification requirements for density, air voids and voids in mineral aggregate shall be removed. The Engineer may determine that the above failed test strip be accepted in-place with no payment.

229.11.5. Accepted test strips meeting density and gradation requirements for the asphaltic mix will be paid for at the Contract unit price per test strip. No payment will be made for test strips required as a result of a Contractor initiated change in job mix formula, compaction method, compaction equipment, or if unacceptable results occur as determined by the Engineer.

229.11.6. No more than two (2) test strips per design job mix formula or field adjustment shall be made. Upon failure of the second test strip to meet specification requirements for density, air voids and voids in mineral aggregate, field and plant operations shall cease. The Contractor shall submit in writing, to the Engineer, the following request for additional testing strips that includes the following:

1. Reason(s) why the two (2) test strips failed that indicate either plant, mix design, material or field related reasons.
2. Corrective action by the Contractor that will prove any future mix successful that is placed as a test strip.
3. The requested re-start date and time that provides the department at least 24 hour notification of continued field and plant operations if this request is approved by the Engineer.

229.11.7. Basis of Payment. The materials in test strips approved by the Engineer will be paid for at the unit price bid for those materials as provided in the Contract. Unit price per test strip should be the cost above and beyond the unit bid price of the in-place material. All materials in unacceptable test strips removed by the Contractor shall become the property of the Contractor and will be disposed of by the Contractor at his expense.

229.12. Equipment.

229.12.1. Plant Calibration. Personnel, scales, and equipment necessary for calibrating the plant and for verifying the accuracy of proportions shall be furnished by the Contractor and shall be available at all times. If batch-type plants are used, the equipment shall include standard 50 lb. test weights equal to 20% of the net load capacity of the scales, to the nearest 50 lb. increment. However, not more than twenty 50 lb. weights will be required. Calibration by an approved commercial scale service will be required for batch-type plants, which have large capacity scales greater than 10,000 lb. or if scales do not meet calibration tolerances. If continuous mixing or drum-mix plants are used, scales conforming to the requirements of 229.12.1.1 shall be provided. Weights shall be calibrated by the governing state body of weights and measures in accordance to the requirements established by the U.S. Department of Agriculture. All equipment shall be calibrated by the Contractor in the presence of and subject to the approval of the Engineer. Plants shall be calibrated at least once each year, or as directed. Plant certification for calibration and verification will not be required, provided that this certification has been furnished to the State within a twelve (12) month period prior to the time certification is required by the City. A letter of certification to verify this will be required. This does not preclude interim checks by City forces.

229.12.1.1. Vehicle Scales. Vehicle scales shall be approved by the Engineer and shall conform to the requirements specified herein.

229.12.1.1.1. Basis of Acceptance. Scale acceptance shall be based on one of the following:

1. A valid certification or seal of approval by the Missouri Department of Agriculture, Division of Weights and Measures.
2. A valid certification or seal of approval by a State of Missouri duly appointed Sealer of Weights and Measures in cities or counties of 75,000 population or more.
3. Certification of calibration from a commercial scale service company showing that the scale meets the requirements of these specifications. The Contractor shall furnish the certification of calibration to the Engineer.
4. Calibration from zero weight through the maximum load to be applied by the application of standard weights in the presence of the Engineer by the Contractor's personnel. In lieu of starting the calibration at zero weight, the standard weights may be applied to an unloaded truck, the weight of which has been determined on a certified scale and the calibration continued through the maximum load to be applied. Regardless of the form of acceptance, the calibration shall be within the accuracy requirements specified below and the scales shall meet all requirements of these specifications.

229.12.1.1.2. Scale Calibration. Scales shall have been calibrated within the 12-month period immediately prior to any material being delivered or any time the Engineer has cause to question the accuracy of the scale. Scales shall be accurate within 0.4% of the net load applied regardless of the location of the load on the platform. The value of the smallest unit of graduation on a scale shall be not greater than 20 lb. Sensitivity requirements of scales not equipped with balance indicators shall be twice the value of the minimum graduated interval on the weigh beam, or 0.1% of the nominal capacity of the scale, whichever is less. For scales

equipped with balance indicators, the sensitivity requirement shall be the value of the minimum graduated interval on the weigh beam.

229.12.1.1.3. Verification of a vehicle scale may be required by the weighing of a hauling unit on another recently calibrated and certified scale.

229.12.1.1.4. If equipment to be weighed is of such length that all axles cannot be weighed simultaneously, a level area of concrete or bituminous pavement shall be provided permitting those axles not on the scale platform to be on the pavement during the weighing operation. The approach shall be at least as wide as the platform and of sufficient length to ensure the level positioning of vehicles during weight determinations. The weighing shall be performed with all brakes released. If equipment to be weighed is equipped with an air bag suspension unit on any axle, the equipment including semi- trailers or pup trailers shall be weighed on vehicle scales of sufficient size to weigh all axles of the combination simultaneously.

229.12.1.1.5. All costs incurred in obtaining a certification of calibration or verification shall be borne by the Contractor.

229.12.2. Equipment for Preparation of Asphalt Cement. An asphalt cement storage tank shall be provided at the proportioning and mixing plant. If more than one storage tank is used to deliver asphalt cement to the proportioning unit, piping and valve arrangements shall permit material to be used from any one of the tanks without using from another at the same time.

229.12.2.1. Tanks for storage of asphalt shall be equipped for heating the material, under effective and positive control at all times, to the temperature requirements set forth in Section 228. Heating shall be by steam or oil coils, electricity, or other means such that no flame shall come in contact with the heating tank.

229.12.2.2. A circulating system of adequate capacity shall provide proper and continuous circulation of the asphalt between storage tank and proportioning units during the entire operating period. The discharge end of the circulating pipe shall be maintained below the surface of the asphalt in the storage tank to prevent discharging into the open air. All pipe lines and fittings shall be steam or oil-jacketed or otherwise properly insulated to prevent heat loss.

229.12.2.3. The Contractor shall provide in the asphalt feed lines connecting the plant storage tanks to the weighing system or spray bar a sampling outlet, consisting of a valve installed in such a manner that samples may be withdrawn slowly at any time during plant operation. The sampling outlet shall be installed between the pump and the return line discharge in such location that it is readily accessible. A drainage receptacle shall be provided for flushing the outlet prior to sampling.

229.12.3. Feeder for Drier. The plant shall be provided with an accurate mechanical means for uniformly feeding the aggregates into the drier to provide uniform production and temperature. A synchronized method of proportioning the aggregates at the cold feeder shall be provided.

229.12.4. Drier. A drier of any satisfactory design for drying and heating the aggregate shall be provided. The drier shall be capable of drying and heating the aggregate to a temperature within the limits of the range specified in Section 228 for the grade of asphalt binder used, without leaving any visible unburned oil or objectionable carbon residue on the aggregate. The maximum temperature specified above for mineral aggregate fractions may be increased as necessary in recycled mix to obtain the specified temperature of the recycled mixture at the time of placement. Absorbed moisture in the aggregate shall be reduced to such a quantity that there is no objectionable segregation of asphalt resulting from escaping water vapor in the prepared mixture.

229.12.5. Screens. Plant screens shall have adequate capacity and size range to separate properly all of the aggregate into the sizes required for proportioning, so that they may be recombined consistently within the limits specified in Section 229.8. The screening unit shall separate the usable heated aggregate into at least three sizes.

229.12.6. Bins. The plant shall have hot bin storage of sufficient capacity to ensure uniform and continuous operation. Bins shall be divided into compartments arranged to ensure separate and adequate storage of appropriate fractions of the aggregate. Each compartment shall be provided with an overflow pipe of such size and at such locations as to prevent any backing up of material into other bins or into contact with the screen. The bins shall have a tailing pipe for rejections. The discharge points of overflow and tailing pipes shall be located so they will not create a hazard. Overflow pipes shall not return the material directly to the hot elevator.

229.12.6.1. If mineral filler or hydrated lime is required, adequate dry storage shall be provided, and provisions shall be made for accurate proportioning.

229.12.6.2. Surge Bins. Surge bins may be used in the production of bituminous mixtures, if approved by the Engineer. They shall be equipped with batchers, so located that the mixture is discharged vertically into the center of the bin. Surge bins, except those rated at 75 tons or less, shall be covered and insulated. They shall be equipped with heating devices, if necessary, to maintain the temperature of the mixture in accordance with the requirements in Section 229.16. Bins shall be equipped with automatic lights to indicate when the surface of the mixture has been drawn down to the top of the sloped portion of the bin. Mixture shall be transferred from the mixing plant to the surge bins by covered drag slat conveyors, skip hoists, or other methods approved by the Engineer. Mixture shall not be withdrawn below the level of the top of the sloped portion of the bin except at the end of each day's operation. Mixture, which the Engineer determines visually to be segregated, will be rejected. Material which is produced without inspection by the Engineer will be rejected. Mixture shall not be stored more than eight (8) hours.

229.12.7. Asphalt Control Unit. Satisfactory means, either by weighing or metering, shall be provided to obtain the proper quantity of asphalt. Metering pumps for asphalt shall deliver accurately to within plus or minus 2.0% of the required quantity when tested for accuracy. Asphalt scales shall conform to the requirement of Section 229.12.11.4. Where the quantity of asphalt is controlled by metering, provision shall be made whereby the delivery of the meter may be readily checked by actual weight.

229.12.7.1. If a continuous mixing plant is used, a continuously registering measurement meter and a pressure gauge shall be installed in the asphalt line at locations meeting the approval of the Engineer. The meter shall be cumulative with a nonsetback register, and have an accuracy within 2% by weight of the material actually being measured in any given period of time. The meter register shall indicate the quantity measured to the nearest 0.25 gal. or less. The pressure gauge shall have a range capable of registering all spraying pressures during plant operation and the dial shall have increments of not more than 1.0 psi. The meter and the pressure gauge shall be so located in the asphalt line that the meter will continuously register the asphalt discharge and the gauge will continuously register the discharge or spraying pressure, and also so that the discharge through both the meter and the gauge can be readily diverted to a container for measurement. During calibration and verification of the asphalt metering pump and the measurement meter, the discharge pressure shall be controlled by a valve or reduction unit to duplicate the plant's spraying pressure. The accuracy of the measurement meter shall be verified at periodic intervals as designated by the Engineer. In case of meter malfunction, plant operation will not be permitted beyond 24 hours after detection except by written approval of the Engineer.

229.12.8. Thermometric Equipment. A thermometer of suitable range shall be fixed in the asphalt feed line at a suitable location near the discharge at the mixer unit. An accurate registering pyrometer or other approved thermometric instrument shall be installed in the discharge chute of the drier in such manner that the temperature of the heated aggregate is automatically registered. This instrument shall be located where it is in clear view of the drier fireman and readily accessible to the inspector.

229.12.8.1. The plant shall be further equipped with approved recording thermometers, pyrometers, or other recording thermometric instruments placed in two of the hot aggregate bins to register and record automatically the temperature of the heated aggregate. One terminal shall be placed in the hot bin containing the smallest aggregate used in the mix and the other terminal shall be placed in the bin containing the largest aggregate. The terminals shall be located where the hot material will flow around them during the proportioning operation and shall not be located near the corners of the bins or at points where the material will collect or pack around them. The charts shall continuously record both time and temperature. The smallest interval of time shown shall be not more than 15 minutes and the temperature graduations shall be not more than 10°F. The charts shall be furnished to the Engineer at the end of each day's operations.

229.12.9. Control of Mixing Time. The plant shall be equipped with positive means to maintain a constant mixing time.

229.12.9.1. Batch Type Plants. The dry hot virgin aggregates, hydrated lime, RAP or RAS, mineral filler if needed, and asphalt cement shall be accurately proportioned in the quantities required by the job-mix formula. Aggregate shall be charged into the weigh hopper in a sequence that will avoid segregation. The mineral aggregate, RAP or RAS if needed, shall be mixed dry for not less than 15 seconds. For SP190 mixtures the dry mixing time may be reduced to 10 seconds. The dry mixing period shall start when all of the mineral aggregates have been charged into the mixer and end when introduction of the asphalt cement begins. After dry mixing, the asphalt cement shall be charged into the mixer in a manner that will uniformly distribute the asphalt over at least 3/4 the full length of the mixer. The time required to add the

asphalt shall not exceed 15 seconds. Wet mixing shall begin at the introduction of the asphalt cement and continue for at least 30 seconds, or longer if necessary to produce a complete and uniform coating of the particles and a thorough distribution of the asphalt cement throughout the aggregate. The wet mixing period shall end when the discharge gate is opened. The dry and wet mixing times shall be as directed by the Engineer.

229.12.9.2. Continuous Mixing Plants. Each size of hot aggregate, mineral filler or hydrated lime if needed, and the asphaltic cement shall be accurately proportioned in the quantities required by the job-mix formula. The mixing period shall be determined in accordance with Section 229.12.12.4.(b) and shall be not less than 35 seconds. The mixing time shall be directed by the Engineer, and may be increased above the minimum specified, if necessary, to produce a complete and uniform coating of the particles and a thorough distribution of the asphalt cement throughout the aggregate.

229.12.10. Safety Requirements. A conveniently located, easily opened gate or door shall be provided in the mixer cover for observation of the mixing operations. Adequate and safe stairways to the mixer platform and sampling points shall be provided, and guarded ladders to other plant units shall be placed at all points where accessibility to plant operations is required. Accessibility to the top of truck bodies shall be provided by a platform or other suitable device to enable the Engineer to obtain samples and mixture temperature data. All gears, pulleys, chains, sprockets, and other dangerous moving parts shall be thoroughly guarded and protected. Ample and unobstructed space shall be provided in and around the truck. This area shall be kept free from drippings from the mixing platform.

229.12.11. Batching Plants.

229.12.11.1. For all contracts having not more than 10,000 tons of asphaltic concrete mixture, standard manual batching methods, approved by the Engineer, will be permitted. For contracts having more than 10,000 tons of asphaltic concrete mixture, batching plants shall be equipped to operate automatically to the extent that the only manual operation required for the proportioning of all ingredients for one batch shall be a single actuation of a switch or starter. The equipment shall include devices capable of automatically proportioning each ingredient of the mixture in the selected sequence and quantity. Interlocks shall be provided which will hold or delay the automatic batch cycling whenever the batched quantity of any ingredient is not within the specified tolerance. The weight setting and timing controls shall be suitably equipped so they may be locked when directed by the Engineer. Manual operation will not be permitted beyond twenty-four (24) hours after breakdown in the automatic equipment, except by written approval of the Engineer.

229.12.11.2. Weigh Box or Hopper. The equipment shall include a means for accurately weighing aggregate of each bin into a weigh box or hopper, suspended on scales, and ample in size to hold a full batch without hand raking or running over. Weigh boxes shall be charged through only one gate opening for aggregate of each bin size. The weigh box or hopper shall be supported on fulcrums and knife edges so constructed that they will not easily be thrown out of alignment or adjustment. Gates on the bins and the hopper shall be so constructed as to prevent leakage when they are closed.

229.12.11.3. Aggregate Scales. Scales for weighing aggregate and mineral filler or hydrated lime may be of the springless dial, or the electronic digital type and shall be of standard make and design having tolerances on overregistration and underregistration not exceeding 0.4% of the indicated weight when tested for accuracy. Each aggregate fraction shall be measured within one (1) percent of the total batch weight of the mixture. Mineral filler or hydrated lime shall be measured within 0.5% of the total batch weight of the mixture. The total weight of the batch shall be within 2.0% of the desired batch weight. The change in load required to change the position of rest of the indicating element or elements of a non-automatic indicating scale an observable amount shall not be greater than 0.1% of the nominal scale capacity. Dial scales shall be equipped with adjustable pointers for marking the weight of each material to be weighed into the batch. Graduation intervals for all scales shall not be greater than 0.1% of the nominal scale capacity. Quantity indicators necessary for batching shall be in full view of the operator.

229.12.11.3.1. Automatic volumetric batch proportioning approved by the Engineer will be permitted and shall meet the tolerances specified in Section 229.12.11.2.

229.12.11.4. Asphalt Bucket. If a bucket is used for weighing the asphalt, it shall be of sufficient capacity to hold and weigh the quantity required for a batch in a single weighing. The filling system and bucket shall be of such design, size, and shape that asphalt will not overflow, splash, or spill outside the confines of the bucket during filling and weighing. The bucket shall be steam or oil-jacketed or equipped with properly insulated electric heating units.

229.12.11.5. Asphalt Scales. Scales for weighing asphalt shall conform to the requirements for aggregate scales, as specified in Section 229.12.11.2. Bituminous material shall be measured within 0.1% of the total batch weight of the mixture. Springless dial scales used for weighing asphalt shall have a tare beam, and a dial graduated in increments not to exceed 0.1% of the nominal scale capacity, and the maximum dial capacity shall be not more than 15% of the nominal capacity of the mixer.

229.12.11.6. Mixer Unit. The plant shall include an approved twin shaft pug mill mixer capable of producing a uniform mixture. The mixer shall be electrically heated or hot oil or steam jacketed and have a capacity of not less than one metric ton (one ton) per batch. The mixer shall be so constructed as to prevent leakage of the contents, and the mixer box shall be equipped with a hood to prevent loss of dust.

1. The mixer shall be designed to provide means of adjusting the clearance between the mixer blades and liner plates to ensure proper and efficient mixing. Not more than one pair of paddle tips on each mixer shaft shall be reversed with respect to the other paddle tips on the shaft, except that for mixers having forty paddles or more, two pair may be reversed on each shaft. The reversed paddle tips shall be located in diagonally opposite corners of the pug mill. The clearance of blades from all fixed and moving parts shall not exceed 3/4".

2. The mixer shall have an accurate time lock to control the operation of a complete mixing cycle by locking the weigh box gate after the charging of the mixer until the closing for the mixer gates at the completion of the cycle; it shall lock the asphalt bucket throughout the dry mixing period and shall lock the mixer gate throughout the dry and wet mixing periods.

3. A rating plate designating the manufacturer's rated capacity shall be attached to the mixer. The quantity of mixture produced per batch shall not exceed the manufacturer's rated capacity. The manufacturer's rated capacity will not be accepted unconditionally. If the mixer does not produce a satisfactory mixture, or if its production does not coordinate with other plant units, the right is reserved to reduce the size of the batch. The decision of the Engineer as to the permissible capacity of the mixer shall be final.

229.12.12. Drum Mix Plants.

229.12.12.1. The plant shall be specifically designed for drum mixing and be capable of satisfactorily heating, drying, and mixing the bituminous mixtures. The aggregate shall enter the drum from the same end the burner is located and travel parallel to the flame and exhaust air stream. The system shall be equipped with automatic burner controls, and heating shall be controlled to prevent damage to the aggregate or the asphalt cement. The temperature of the mixture when discharged from the mixer shall be within the range specified in Section 228 for the grade of asphalt cement being used. The rate of flow through the drum shall be controlled in order that the bituminous material and aggregate shall be mixed until a homogeneous mixture with all particles uniformly coated is obtained and in no case shall the quantity of mixture produced exceed the manufacturer's rated capacity.

229.12.12.2. Each feeding orifice shall have an adjustable gate with an indicator provided to reference the opening setting. On each of the aggregate feeders, a device shall be installed to indicate when the flow of material from the bin is below the point where accurate proportioning through the feeder gates can be accomplished. These indicators shall be positive in action and shall actuate a clearly visible or audible signal to the plant operator or stop the flow of materials to the drum when the level of material in the bin is too low for accurate proportioning. In addition, for those particular cold bins whose aggregate material tends to either bridge or lump together causing temporary interruptions in feeds, a vibrator or other suitable means shall be provided to ensure uniform flow. The order of aggregate feed onto the composite cold feed belt shall be from coarse to fine. When only one aggregate is furnished, two cold bins shall be used. A scalping screen mounted independent of other proportioning or weighing equipment shall be required if directed by the Engineer.

229.12.12.3. Asphalt cement shall be introduced through a continuously registering cumulative indicating meter by a pump specifically designed for dryer-drum plants. The meter shall be located in the asphalt line so that it will continuously register the asphalt discharge to the mixer and so that the discharge through the meter can be readily diverted into a container for measurement. The meter shall be equipped with a nonsetback register and shall have accuracy within 2% by weight of the material actually being measured in any given period of time. The accuracy of the pump and meter shall be verified at periodic intervals as designated by the Engineer.

229.12.12.4. If mineral filler or hydrated lime is specified, a separate bin and feeder shall be furnished. Mineral filler or hydrated lime shall be introduced and uniformly dispersed into the mixture without loss to the dust collection system. The delivery system shall be variable speed and interlocked with the aggregate weigh belt so that total dry aggregate weight, including

mineral filler or hydrated lime, is indicated to the asphalt proportioning system. A device shall be provided to indicate when the flow of filler into the delivery system stops, or drops below, or rises above the specified tolerance. The rate of flow of mineral filler or hydrated lime into the delivery system shall be accurate to 0.5%, by weight, of the total mix. Means shall be provided to readily divert the flow of mineral filler or hydrated lime into a container for measurement.

229.12.12.5. The aggregate feed system, including hydrated lime and mineral filler if specified, and the asphalt flow shall be interlocked by a blending system, which will automatically regulate the asphalt flow and cause immediate correction for variations in aggregate flow. The system shall provide positive weight measurement of the combined cold aggregate feed by use of belt scales. The combined cold aggregate feed shall be continuously recorded on a nonsetback register. The scale and the conveyor at the scale shall be protected from wind and weather effects. Feed of material to the belt scale shall be controlled to ensure at normal operation the combined aggregate flow is between 50% and 100% of the rated capacity of the scales. The plant shall be equipped so that the proportion of each aggregate can be individually varied. The plant shall also be equipped so that the total aggregate rate can be varied without affecting the proportions. The plant shall be equipped with a moisture-compensating device in the control panel to automatically correct for the moisture in the aggregate passing over the belt scale. Moisture determinations on the combined aggregate will be made periodically during each day's operations. The plant shall be equipped with a device in the control panel to automatically correct for the specific gravity of the asphalt. The plant shall also be equipped with a device to positively maintain the proportions of aggregates, mineral filler or hydrated lime, and asphalt cement throughout the full production range.

229.12.12.6. Safe, adequate and convenient facilities shall be provided for obtaining representative asphalt and aggregate samples. The plant shall be equipped with a sampling device capable of providing a sample of sufficient size from the full width of the combined aggregate cold feed flow. It shall be designed so that samples may be taken while the plant is operating at normal production rates. Safe, adequate and convenient facilities shall be provided for calibrating the asphalt flow, mineral filler or hydrated lime flow, and the aggregate flow. The manufacturer's recommendations shall be followed for calibration. To calibrate the aggregate flow system, means shall be provided to permit a positive and uniform diversion of the aggregate in sufficient quantity for accurate timed weight checks. To calibrate the asphalt metering system for proper proportioning, an asphalt distributor or other equipment approved by the Engineer shall be made available so that an accurate tare, gross and net weight may be obtained of the diverted asphalt discharge. If necessary, manual overrides of the electronic timing equipment shall be provided for testing and calibration. Electronic timing equipment shall be provided for testing and calibration purposes. The rate of flow of the total aggregate and asphalt flow shall not vary by more than 2.0% by weight from the required quantity of each.

229.12.12.7. Automatic Ticket Printer. The asphalt plant shall be equipped with an automatic ticket printer connected to the weighing system in such a manner that the printer automatically detects and prints the weight determined by the system. The printer shall store and recall the tare weight when the operator enters the vehicle identification. The weight shall be shown to at least the nearest 20 pounds or nearest one one-hundredth of a ton. The automatic printer shall be capable of keeping and printing cumulative totals for each project for each type of bituminous mixture. The automatic printer shall produce a ticket in triplicate to accompany

each load delivered to the project and shall be furnished to the Engineer showing the weight for each load that shows the following:

1. Gross, tare and net weights.
2. Identification of the vehicle.
3. Current date and time.
4. City job mix designation.
5. Job mix percent asphalt.
6. Unique ticket number. (May be preprinted on the ticket).
7. City Project No. and Federal Job No. if applicable.

When the net weight of bituminous mixture is determined by batch weights, the scales shall meet all requirements of this Section, including automatic ticket printing, except the gross and tare weights will not be required. When the net weight of bituminous mixture is determined by weighing in a vehicle, the vehicle shall be weighed empty for each load, weighed daily or weighed as the Engineer may direct, in order to establish the tare weight of each load.

At the end of each day's operation the Contractor shall furnish to the Engineer the total tonnage of mixture produced by the asphalt plant in sufficient detail to determine the amount of asphalt cement used in that day's operation.

In the event of automatic ticket printer failure, the Contractor may be allowed, with the Engineer's approval, to furnish manually written tickets to complete that day's operation.

229.12.13. Hauling Equipment. Trucks used for hauling bituminous mixtures shall have tight, clean, smooth, metal beds, which have been thinly coated with a minimum quantity of BR3600 by BioSpan Technologies, Inc. or equal, to prevent the mixture from adhering to the beds. Use of diesel fuel, fuel oil or other detrimental products as a bed coating will not be allowed. Each truck shall have a cover of canvas or other suitable material of such size as to protect the mixture from the weather. The cover shall be securely fastened over all sides of the truck bed. When necessary, so that the mixture will be delivered on the road at the specified temperature, truck beds shall be insulated. No loads shall be sent out so late in the day that spreading and compacting of the mixture cannot be completed during daylight, unless there is adequate lighting in the area of work.

229.12.14. Pavers. Bituminous pavers shall be self-contained units, rubber tired or trackmounted, provided with an activated screed or strike-off assembly, equipped with a vibratory system capable of consolidating the asphaltic material and a system capable of heating and maintaining the screed at a temperature which will provide for the spreading and finishing of asphaltic concrete in lane widths applicable to the specific typical section and thicknesses shown on the plans. The paver shall be equipped with a receiving hopper having sufficient capacity to produce a uniform spreading operation. The hopper shall be equipped with a distribution system of sufficient capacity and speed to place the mixture uniformly in front of the screed or strike-off. The use of auger extensions will be required when, in the opinion of the Engineer, they are necessary to properly distribute the mixture before the screed or strike-off. The screed or strike-off assembly shall be equipped with an automatic control device as required in Section 229.16.6, and shall effectively produce a consolidated finished surface of required evenness and texture without shadow lines, tearing, shoving, or gouging the mixture. When laying mixtures, the paver

shall be capable of operation at forward speeds, which will produce a uniform consolidated mat of asphaltic material. The use of all paving equipment will be subject to the approval of the Engineer.

229.12.14.1. When conditions dictate, the Engineer may disapprove the use of rubber tired pavers. Uniform tire pressure must be maintained in all pneumatic tires at all times.

229.12.14.2. The use of petroleum distillates to clean the paver or other equipment will not be allowed on any paved surface. The cleaning of handtools will be allowed inside of containers firmly attached to the paver, which have a sufficient volume to prevent spilling of petroleum distillates on to the surface to be paved. Any spillage on to the surface to be paved will be promptly cleaned up utilizing absorbent material and if necessary the surface will be retacked. If in the opinion of the Engineer, the container attached to the paver is insufficient in any way, it will be removed and handtools will be cleaned beyond the paving limits until a suitable container is provided. Petroleum distillates in sprayers or buckets will not be allowed within the boundaries of the area to be paved.

229.12.15. Automatic Screed Control. The use of automatic screed control devices will be required for all full depth construction except for paving small irregular areas, shoulders, entrances, and side road connections. The screed of the mechanical spreading and finishing machine shall be regulated by an automatically controlled grade leveling and slope control device approved by the Engineer. The device shall be of a standard commercial quality adapted to the type of paver used and shall provide control for producing a uniform surface to the established grade and a cross slope conforming to the requirements of the typical section. The device shall also be equipped with the necessary controls to permit the operator to adjust or vary the slope throughout superelevated curves.

1. Except as modified above or by the Contract, an established grade reference shall be used. The Engineer will establish the grade and will furnish variable thickness values at intervals along the centerline of the roadway for the use of the Contractor in setting a grade reference. The initial pass of the paver, when placing the first continuous layer, shall be made with the sensor following the established grade reference maintained true to grade. If the established grade reference is not required, the initial pass of the paver, when placing the first continuous layer, shall be made with the sensor following a traveling reference plane not less than 30 ft. in length, segmented, supported on pads parallel to the paver and mounted as an integral part of the paver. Regardless of the method used for placing the first continuous layer, other layers shall be placed by use of a shoe-type sensor or indicator, the traveling reference plane (walking beam), or by additional use of the established grade reference as follows:

a. If the current construction consists of only one bituminous or asphaltic layer, a shoe-type sensor or indicator resting on the adjacent surface shall be used for control of subsequent passes of the paver for that layer. When more than two adjacent passes of the paver are required to place the material the full width of the riding surface, additional use of the established grade reference or use of the traveling reference may be

required, if in the judgment of the Engineer, satisfactory grade control is not being obtained by the use of the shoe-type sensor.

b. If the current construction consists of two bituminous or asphaltic layers, subsequent passes of the paver for the first layer and the first pass of the paver for the second layer shall be made with the sensor following the traveling reference. The adjacent passes of the paver for the second layer shall be made with a shoe-type sensor or indicator resting on the previously placed second layer. When more than two adjacent passes of the paver are required to place the second layer the full width of the riding surface, additional use of the established grade reference or the traveling reference may be required, if in the judgment of the Engineer, satisfactory grade control is not obtained by the use of the shoe-type sensor resting on the adjacent surface.

c. If the current construction consists of three or more bituminous or asphaltic layers, subsequent passes of the paver for the same layer and each pass of the paver for all additional layers except the top layer, shall be made with the sensor following the traveling reference. When more than two adjacent passes of the paver are required to place the surfacing material, except for the top layer, the full width of the riding surface, additional use of the established grade reference may be required, if in the judgment of the Engineer, satisfactory grade control is not obtained by the use of the traveling reference. The automatic screed control device need not be used when placing the top layer if the current construction consists of three or more full layers of a bituminous or asphaltic mixture.

2. The spreading operation shall be discontinued in the event of failure of the automatic control device, except that placement will be permitted of mixtures already produced at the time of the failure. The use of the automatic control equipment does not preclude the need for manual control of the screed adjustment for wedging operations over small areas requiring more correction than the maximum thickness permitted for an individual layer of the type of material being placed.

3. For overlay of an established depth on a milled surface or wedged course, the use of the automatic screed control maybe eliminated if in the opinion of the Engineer the surface tolerances may be met. For safety of the motoring public, the automatic screed control may also be eliminated if such action is necessary due to width restrictions on the roadway.

229.12.16. Rollers. All rollers, vibrators, or other equipment used to compact the asphaltic mixture shall be in satisfactory working condition. All rollers shall be capable of reversing without backlash, and steel wheel rollers shall be equipped with scrapers, scouring pads, and a controlled flow watering system. Pneumatic tired rollers shall be self-propelled, of the oscillating type, and equipped with smooth tires of equal size, diameter, and ply rating, all maintained at the same inflation pressure. All rollers shall have a scouring pad and a system for moistening each wheel or roller. It will be the Contractor's responsibility to use the appropriate

number and types of rollers to achieve compaction. A minimum of (3) three 10 to 12 ton tandem axle vibratory rollers will be required. Vibratory frequency and pattern will be established by test strip and will not be altered unless field monitoring indicates compaction outside the acceptable range. It will be the Contractor's responsibility to establish and operate within these parameters. A maximum 3 ton vibratory roller will be required for intersections and commercial approaches to eliminate roller marks and indentations. Trench rollers, vibrators, and other special equipment used for compacting mixtures placed in areas inaccessible to the rollers specified shall be of a weight and design approved by the Engineer. The Contractor shall submit a certification of weight or other suitable documentation certifying compliance with specifications for each piece of compactive equipment proposed for use. Non-certified equipment will not be permitted to operate. No direct payment will be made for the cost of complying with this requirement.

229.12.16.1. After the asphaltic mixture has been spread, struck off, and surface irregularities adjusted, it shall be thoroughly and uniformly compacted by rolling. Rolling shall begin as soon after spreading the mixture as it will bear the weight of the roller without undue displacement. The number of rollers furnished shall be sufficient to obtain the required compaction while the mixture is in a workable condition. Except for projects involving small quantities of mixture, the compacting equipment requirements shall meet specifications set forth in Section 229.12.16. If equipment breaks down or rolling does not keep up with the spreader, all work will be stopped. The Engineer will have the option of rejecting any pavement not meeting the rolling or density requirements of Section 229.12.18.1.4. If pavement is designated to remain in place, penalties will be assessed for the affected material in accordance to Section 229.29.

229.12.16.1.1. Rollers shall move at a uniform speed with the drive roller or wheels nearest the paver. Rolling shall begin at the sides and proceed longitudinally parallel to the road centerline, each trip overlapping one half the roller width, gradually progressing to the crown of the road. When paving in echelon or abutting a previously placed lane, the longitudinal joint shall be rolled first followed by the regular rolling procedure. Where practical the longitudinal lane joints will be "pinched" by rolling from the existing portion of roadway and lapping over into the newly placed asphaltic material so as to tightly bond and compact the new asphalt to the existing asphalt. On superelevated curves the rolling shall begin at the low side and progress to the high side by overlapping of longitudinal trips parallel to the centerline. Alternate trips of the roller shall be terminated in steps to prevent the formation of surface irregularities. The alternate stops shall be spaced in such manner that any excess water will drain quickly. Lateral or diagonal rolling may be permitted to remove high spots, provided the rolling is done in such manner and at such time that shoving or cracking will not result. Rolling shall be continued until all roller marks are eliminated. Lateral or cross-rolling will be required at all butt or construction joints.

229.12.16.1.2. Any displacement occurring as a result of starting, stopping, or changing direction of a roller, or from other causes, shall be avoided. Areas of displacement shall be corrected at once by the use of rakes and addition of fresh mixture when required. Care shall be exercised in rolling not to displace the line and grade of the edges of the asphaltic concrete. If necessary to prevent adhesion of the mixture to the rollers, the wheels and rollers shall be kept properly moistened with water or water mixed with very small quantities of detergent or other approved material. Excess liquid will not be permitted. Along forms, curbs,

inlet sumps, headers, walls and other places not accessible to the rollers, the mixture shall be thoroughly compacted with hot hand tampers, smoothing irons, or with mechanical tampers. A trench roller shall be used on depressed areas inaccessible to regular width equipment. A one-ton roller or hand roller will be required to adequately compact tapered pavement edges.

229.12.16.1.3. Any mixture that becomes loose and broken, mixed with dirt, or is in any way defective shall be removed and replaced with fresh, hot mixture, which shall be compacted to conform with the surrounding area. Any area showing an excess or deficiency of asphalt cement shall be removed and replaced.

229.12.16.1.4. Rolling shall be continued until all roller marks are eliminated and before the un-modified mixture cools to 185°F or the modified mixture cools to 200°F, except as otherwise specified. The final density of the in-place mixture shall be between 92 and 96% of the field determined maximum specific gravity (AASHTO T 209). The applicable density will be determined by the Engineer to correspond with the mix design test method. Density will be determined by nuclear methods or by a specific gravity method.

229.12.16.1.5. Joint Density. The minimum density of all traveled way pavement within 6 inches of a longitudinal joint, including the pavement on the traveled way side of the shoulder joint, shall not be less than 2.0% below the specified density when unconfined. The density of the longitudinal joint when confined shall be included in the evaluation of the remainder of the mat.

229.13. Weather Limitations. Asphaltic concrete shall not be placed: (1) when either the air temperature or the temperature of the surface on which the mixture is to be placed is below 50°F for the surface course or below 40°F for subsurface courses, (2) on any wet or frozen surface, (3) when weather conditions prevent the proper handling or finishing of the mixture. With the approval of the Engineer, base course (asphaltic concrete or bituminous pavement) may be exposed through the winter months (November through March) with the following requirements.

1. The in place density shall be between 93 and 96%.
2. The Voids in Mineral Aggregate (VMA) shall not be lower than 13.

The Voids in Mineral Aggregate (VMA) will be determined in accordance with Section 229.9.1 and the in place densities in accordance with Section 229.12.16.1.4.

229.13.1. During critical temperature periods in the fall of the year, the Engineer may authorize the placement of surface course asphaltic concrete when the on-site ambient temperature is 45°F and rising with an anticipated high temperature of at least 50°F. No further deviation in weather restrictions or temperature limitations will be granted.

229.14. Subgrade Preparation. The subgrade upon which the Superpave mixture is to be placed shall be prepared in accordance with Section 201.

229.14.1. For widening work, the bottom of the trench shall be compacted until it is stable by use of a trench roller having a weight of not less than 300 lbs./in. of width of rear roller, or by mechanical tampers or other methods approved by the Engineer. Suitable excavated

material may be used in shouldering operations. All surplus excavated material shall be disposed of by the Contractor in areas to be secured by him beyond the right-of-way limits, and as specified in Section 203.

229.14.1.1. On the outside of curves, the design depth of trench at the beginning of the superelevation transition shall be varied gradually to the minimum depth at the end of the superelevation transition. Slight transitioning of the width of the base widening will be necessary to permit the indicated angle of repose or shear angle outside of the ultimate edge of surface. The bottom of the trench shall in no case be less than 3 in. below the surface of the existing pavement.

229.15. Application of Prime or Tack. The prime or tack coat, when specified, shall be applied as set forth in Section 223.

229.16. Spreading and Finishing. The base course, primed or tacked surface, or preceding course or layer shall be cleaned of all dirt, packed soil, or any other foreign material prior to spreading the asphalt mixture. The mixture, when delivered to the spreading and finishing machine, shall not exceed 350°F and be within 25°F of that designated by the Engineer. The paver shall be operated at a speed consistent with prevailing conditions that will give the best results. The rate of delivery of the mixture to the paver shall be coordinated so as to provide, where practical, a uniform rate of placement without intermittent operation of the paver.

229.16.1. The thickness of each course shall conform to the typical section in the Contract. The Contractor may construct each course in any number of layers he chooses; but the compacted thickness for SP95 shall be between 1 and 2 in., the compacted thickness for SP125 shall be between 1.5 and 3 in., the compacted thickness for SP190 shall be between 2 and 4 in. The Engineer may increase the compacted layer thickness for SP190 mixtures when used for full-depth base repair or in areas where the above specified layer thickness is not deemed practical. In these areas the approved compaction methods shall be performed at the proper intervals and duration until there is no further evidence of consolidation.

229.16.1.1. Unless specified otherwise, paver screed or strike off widths will reproduce the same lane configuration present when the reconstruction commenced. The use of specialized equipment to comply with this requirement will not be considered a cause for additional compensation. Any change in lane configuration will fall within the normal operating tolerance of a standard ten (10) foot screed or strike off paver and will be made prior to the commencement of paving operations.

229.16.2. For pavements having a width of 20 to 24 ft., inclusive, the asphaltic concrete pavement shall be laid in lanes approximately one half the full width of the completed pavement and the full width completed as soon as practical. Unless otherwise permitted, a single lane of any course shall not be constructed to a length which cannot be completed to full width of the pavement on the succeeding operating day unless otherwise permitted. For pavements greater than 24 ft. in width, single lane width construction shall be limited to one day's production and completion to full width shall be accomplished as soon as practical. For width less than 20 ft., a cut off plate or specialized paver will be required.

229.16.3. No segregation will be permitted in handling the mixture at the plant, from the truck, or during spreading operations on the roadway. Where only the top layer of the surfacing continues across a bridge, the bottom layers shall be ended at a vertical edge. Unless otherwise directed by the Engineer or shown on the plans, all lift edges shall be sloped or tapered and be extended to provide a smooth transition at side streets and driveways. Under all conditions, the final lift shall be tapered to a 3:1 slope unless adjacent to an aggregate shoulder.

229.16.4. The Contractor shall keep traffic off the asphaltic concrete until it has cooled sufficiently to prevent flushing of the asphalt to the surface, marking or distorting the surface, or breaking down the edges, and in any case until the temperature of the asphaltic concrete is 140°F or below. When the asphaltic concrete construction consists of more than a single layer, each layer shall be compacted as specified and allowed to cool to the ambient temperature before the next layer is placed. The final surface layer shall be laid in a continuous sequence over the entire project unless otherwise approved by the Engineer.

229.16.5. Spot Wedging and Leveling Course. The Engineer will determine the locations and thickness of spot wedging and the thickness of leveling course to obtain the smoothest possible riding surface. This procedure may result in spot wedging operations over small areas with feather-edging at high points and ends of wedge areas. Rigid control of the placement thickness of the leveling course will be required. A leveling course, consisting of a layer of asphaltic concrete of variable thickness used to superelevate curves and eliminate irregularities in the existing base, shall be spread uniformly to the desired profile grade and cross section. The use of an approved finishing machine with automatic screed control will be required on the spot wedge and the leveling course. Superpave SP125 mixture shall be used for spot wedging. The type of mixture to be used for the leveling course will be designated in the Contract. Surface grades will be established in advance of the Contractor's wedge and level operations to prevent unnecessary interruptions in the work.

229.16.5.1. At intersections between arterial and/or collector streets, the lane width of the pavement shall be completed for a minimum length of 100 ft. on either side of the intersection centerline and feathered at the edges in a single operating day so that a uniform, smooth riding surface is maintained across the intersection. When the asphaltic concrete construction consists of more than one layer and a vertical face remains at a cross street at the end of a work day, temporary asphaltic material shall be added along the edges to provide a smooth riding surface.

229.17. Placement of Temporary Pavement. Where conditions are such that the use of a finishing machine is not deemed practical by the Engineer for constructing the wedge and leveling course, the base course on the subgrade, narrow pavement widths or small irregularly shaped areas, the Engineer may allow the use of bladed motor equipment or box spreaders for this construction. The finish courses for temporary pavements shall be placed with a finishing machine.

229.17.1. In lieu of roller and density requirements, mixtures used for surfacing medians and similar areas, shoulders adjacent to rigid pavement, shoulders adjacent to resurfaced rigid pavement, and temporary by-passes to be maintained at the expense of the Contractor shall be thoroughly compacted by at least three complete coverages over the entire area, with a tandem-type steel wheel roller weighing not less than 10 tons. The rolling shall be performed at

the proper time intervals and shall be continued until there is no visible evidence of further consolidation.

229.18. Joints. Longitudinal and transverse joints shall be carefully made and well bonded.

229.18.1. Transverse Joints. Transverse joints shall be formed in accordance with standard drawings that will produce a dense, vertical section for use when laying is resumed. The joint formed when the fresh mixture is placed shall be dense, well sealed, and the grade, line, and surface texture of the succeeding surface shall conform to that of the joined surface. The vertical face of transverse joint shall be painted with a light coating of asphaltic material. Hand manipulation of the mixture shall be minimized to avoid unsightly texture.

229.18.2. Longitudinal Joints. Longitudinal joints shall be formed by the use of an edging plate fixed on both sides of the finishing machine. These plates shall be adjustable and the outside plate shall be set at an angle of approximately 45 degrees with the surface of the roadbed and in a position that will lightly compact the mixture. The inside plate, or that placing material for the longitudinal joint, shall be normal to the roadbed. When placing the first lane, if the mixture at the longitudinal joint tends to slump, it shall be set up to a vertical edge by light compaction with the back of the rake. Care shall be taken to obtain a well bonded and sealed longitudinal joint by placing the hot mixture in a manner ensuring maximum compaction at this joint. A light coating of asphaltic material shall be applied to the exposed edge before the joint is made. Irregularities in the outside edge alignment shall be corrected by removing or adding mixture before the surface is compacted. Irregularities in the outside edge alignment shall be corrected by removing or adding mixture before the surface is compacted. No additional payment beyond the unit prices bid for asphaltic materials will be made for compliance with this requirement.

229.18.2.1. The longitudinal joint in any layer shall offset that in the layer immediately below by approximately 6 in.; however, the joints in the completed surfacing shall be at the lane lines of the travel way, when field conditions permit.

229.18.3. Required Butt Joint. Butt joints shall be constructed in accordance with Section 222.

229.19. Surface Tolerance. The surface of each layer shall be substantially free from waves or irregularities. On arterial roadways and collector streets, the final surface (except on medians and similar areas, shoulders adjacent to rigid pavement, and temporary bypasses) shall not vary from a 10 ft. straightedge, applied parallel to the centerline, by more than 1/8 in. At transverse construction joints, surface tolerances shall not vary from the 10 ft. straightedge by more than 1/4 in.

229.19.1. Surface irregularities in the final lift shall be addressed immediately and corrected in the final rolling process. Should the Contractor fail to pave within the required tolerances, the operation will be halted. If surface irregularities still exist when the temperature of the asphalt drops below that which is required to roll the pavement in a workable state, the affected pavement shall be removed and replaced to a depth of 1 1/4 in. or treated by other methods as directed by the Engineer.

229.19.2. On residential streets, testing in accordance to Section 229.19 will be performed, except that surface variations exceeding 1/2 in. in 10 ft. will be marked for removal.

229.20. Testing Pavement. At least one in situ density test shall be conducted per 300 linear feet of street pavement, and four 4" diameter core samples shall be taken per 500 linear feet of street pavement for the determination of the average pavement thickness. The finished courses shall have the nominal thickness shown on the plans. Tests will be made to ensure that each course is being constructed of proper thickness, composition and density. The Contractor shall cut samples from any layer of the compacted mixture at locations designated by the Engineer. The samples shall be cut and delivered to an independent testing laboratory acceptable to the Engineer. If the sample is not cut and delivered as stated, the asphalt laydown operation shall be suspended until the samples are cut and delivered to the laboratory. Ice may be used to cool the pavement immediately prior to sawing or coring the samples. Samples may be obtained by either sawing with a power saw or by drilling 4 in. diameter cores. Each sawed sample shall consist of a single piece of the pavement of the size designated by the Engineer, but no larger than twelve (12) inches square. The samples (four cores or one sawed) shall be identified with the following information:

a. Project Name and Number
b. Mix Type and Street Name
c. Time and date sampled
d. Street Address or Station and Offset
e. Project Resident / Inspector Name

Test results shall be available within twenty-four (24) hours (one work day) of delivery to the laboratory.

229.20.1. Density Sample. If cores are used for density determination, a set of four cores are required. At least one set of samples will be taken for each day's production. All samples, whether sawed or cored, shall consist of an undisturbed portion of the compacted mixture. The cores shall consist of the full depth of the lift or layer to be tested. Density tests, either cores or nuclear reading, shall be taken in each lane being paved, every 300 ft. Cores used to establish a nuclear correction factor shall be taken in a number designated by the Engineer and each four cores or fraction thereof shall be considered a sample. The Contractor shall coordinate this work in a manner that traffic shall be prohibited from traveling on the pavement until after the nuclear test pattern has been performed and that area is cored and the pavement is repaired. Initial nuclear test results, without a correlation with cores, does not imply acceptance by the City. The nuclear gauge needs to be correlated to core densities that are taken from the same location as was the nuclear gauge tested. This should be done for each different mix that might be used.

229.20.2. The surface from which samples have been taken shall be restored by the Contractor with the mixture then being produced at the time the cores are taken. If paving has been completed, the Contractor shall immediately restore the surface from which samples have been taken with an approved commercial mixture acceptable to the Engineer.

229.20.3. Payment for coring and sawing shall be included in the Contractor's unit price for paving. Costs for Traffic Control while performing the coring and sawing operation shall be included in other items.

229.21. General Requirements.

229.21.1. Sequence of Operations. To reduce inconvenience to the traveling public during widening or surfacing, the Contractor will not be permitted to place any final surface course until the base widening, the leveling course, and the binder course have been completed throughout the entire combination of sections, unless otherwise authorized by the Engineer. The proper condition of the base widening, the leveling course, and the binder course, at the time of placing the surface course, shall be the Contractor's responsibility.

229.21.2. Traffic Striping. If the Contractor's work has obliterated the existing traffic striping on resurfacing projects open to through traffic, and the surface course has not been completed at the time work is suspended for any extended period, temporary striping will be placed by the Contractor when necessary in the judgment of the Engineer. Any temporary striping and residue shall be removed prior to placing the next lift.

229.22. Surfaced Approaches. At locations designated in the Contract or as directed by the Engineer, approaches are to be tacked in accordance with Section 223 and surfaced with bituminous pavement. The asphaltic surface shall be placed in accordance with details shown on the typical section or as directed by the Engineer. No direct payment will be made for any work required to condition and prepare the subgrade on the approaches.

229.23. Filling Drain Basins. If shown on the plans or designated by the Engineer, existing drain basins shall be filled to the top of the lip with plant mix bituminous base course from the pavement edge to the edge of the shoulder. No direct payment will be made for any difficulty or delay occasioned by this requirement.

229.24. Pavement Repairs (Blow-ups). A blow-up will be considered that area where excessive expansion has resulted in distress to the existing pavement. Blow-ups occurring prior to the application of the tack coat on the existing surface will generally be repaired by the City. Blow-ups occurring after the application of the tack coat shall be repaired by the Contractor by removing the distressed concrete and subgrade, and replacing with asphaltic concrete mixture full depth, thoroughly compacted.

229.25. Method of Measurement. The weight of the mixture will be determined from the batch weights when a batch-type plant is used; and will be determined by weighing each truck load when other types of plants are used.

229.26. Basis of Payment.

229.26.1. Due to possible variations in the specific gravity of the aggregates, the tonnage used may vary from the proposal quantities and no adjustment in Contract unit price will be made because of such variation.

229.26.2. Payment for Pavement Repairs (Blow-ups). Payment for removing and disposing of the broken concrete and for preparing subgrade will be made as provided in Contract bid items. Payment for furnishing, placing, and compacting the asphaltic concrete replacement material will be at the Contract unit bid price for the mixture used.

229.26.3. The accepted quantities of asphaltic concrete will be paid for at the unit bid price, to the nearest ton, for each of the pay items included in the Contract. The quantity of SP125 material used in the wedging or leveling course will not be paid for as a separate bid item, but will be paid for at the unit bid price for the pay item shown as SP125 asphaltic concrete.

229.26.4. Compensation for Thickness Deficiencies. In new construction, cores shall be cut to determine pavement thickness. The drilling of cores for thickness in irregular placement areas or thicknesses, or on projects involving less than 1000 tons of each SP mixture specified, may be waived by the Engineer. If any core measurement is less than the thickness indicated in the plans, penalties shall be assessed in accordance with the following schedule:

Deficiency in Thickness	Deduction, in Unit Price Per Ton
0.00 to 0.20 in.	None
Over 0.20 to 0.40 in.	20% Reduction
Over 0.40 to 0.60 in.	60% Reduction
Over 0.60 in.	100% Reduction

For privately built public roads, pavement with a thickness deficiency of over 0.25 in. shall be milled and overlaid to bring the pavement to the correct thickness. If the correct thickness cannot be achieved, the Engineer shall review the deficiency and determine a remedy. All core drilling and patching shall be the responsibility of the Contractor.

229.26.4.1. Pavement Thickness. Cores will be taken for each completed course. Lift thickness may be determined by the average thickness of cores taken for density measurements. For the purpose of determining the constructed thickness of full depth pavement, cores shall be taken at random intervals in each traffic lane at the rate of 1 core per 1000 feet or increment thereof, or at any other locations as may be determined by the Engineer and measured in accordance with AASHTO T 148. In addition, cores will be taken at all locations where thickness measurements taken during the course of construction indicate a thickness deficiency sufficient to justify a deduction from the Contract unit bid price, or at any other locations as may be determined by the Engineer. When the measurement of any core is deficient in excess of 0.20 in. from the plan thickness, additional cores will be taken at 500 ft. intervals parallel to centerline ahead and back of the affected location until the extent of the deficiency has been determined. The in-place unit weight of the core sample will be used to compute the tonnage of each SP mixture specified in the affected area subject to deduction.

229.26.5. Compensation for Density Deficiencies. Pavement shall be tested in accordance to Section 229.12.18.1.4 and/or 229.20.1. Density values for each lift of asphaltic concrete will be determined. Pavement, which is not compacted to the desired density requirement specified, shall be removed and replaced. If in the judgment of the Engineer the inadequately compacted pavement would not seriously impair traffic service, penalties may be

assessed for inadequate density results in lieu of the removal and replacement of pavement. Penalties will be assessed at the Engineer's option in accordance to Section 229.26.6.

229.26.6. Full Depth Superpave Asphaltic Concrete Construction and Asphaltic Overlays. At the Engineer's option, penalties for inadequate compaction will be assessed as follows:

Compaction Results (Percent of Field Determined Maximum Specific Gravity, *Gmm*)	Deduction in Unit Price per Ton
97.1% or above	100% Reduction or Remove and Replace
96.1 to 97.0%	25% Reduction
91.5 to 96.0%	No Deduction
90.6 to 91.4%	5% Reduction
89.5 to 90.5%	25% Reduction
89.4% and below	100% Reduction or Remove and Replace

Penalties will be assessed at 500 ft. intervals. These penalties may be waived for wedge and leveling courses if the Engineer determines that proper compaction may not be achieved due to irregular placement areas or thicknesses.

For privately built public roads, pavement with a density above 96.1% or below 90.5% shall be removed and replaced to bring the pavement to the correct density.

229.26.7. The quantities, complete in place and accepted, will be paid for at the applicable Contract unit price, which payment shall be full compensation for preparation of subgrade, furnishing, hauling and placing all materials, compaction, equipment, tools, labor and work incidental thereto. Payment will be made under:

Item No. 229.1. Test Strip, per ton or square yard.
Item No. 229.2. SP90 Asphaltic Concrete, per ton or square yard.
Item No. 229.3. SP125(LP)(LS) Asphaltic Concrete, per ton or square yard.
Item No. 229.4. SP190 Asphaltic Concrete, per ton or square yard.

SECTION 230

PORTLAND CEMENT CONCRETE

230.1. Description. Portland cement concrete shall consist of a mixture of Portland cement, fine aggregate, coarse aggregate, and water combined in the proportions specified for the various classes of concrete. Admixtures for the purpose of entraining air, retarding or accelerating the set, tinting and other purposes may be added as specifically required or permitted.

Section 230 addresses Portland cement concrete to be used for used for pavement, curb and gutter, sidewalk, steps, and driveways. Section 250 addresses Portland cement concrete used for drainage structures, retaining walls, and any special concrete structures.

230.2. Materials.

Portland cement concrete shall conform to the requirements of the current MoDOT's Missouri Standard Specifications for Highway Construction, Section 501 and all other sections as referenced in the MoDOT Standard Specifications for Highway Construction unless otherwise specified by the Engineer.

230.3. Mixing. The concrete may be mixed on the site as in case of a paving machine mixed, at a central mixing plant, or mixed in transit. In all cases the concrete shall be agitated and mixed until there is a uniform distribution of the materials and shall be discharged completely before the mixer is recharged.

230.3.1. In the case of ready-mix concrete, the concrete shall be discharged within sixty (60) minutes and the time required between start and completion of discharge shall not exceed fifteen (15) minutes. If the length of time is greater than sixty (60) minutes, the load of concrete shall be rejected at the expense of the Contractor. The ready-mix concrete shall be mixed and delivered in accordance with the requirements set forth in standard specification for ready-mix concrete ASTM C 94.

230.3.2. Ready-mix concrete shall be produced by a plant which has been approved by the Missouri Department of Transportation and the Engineer.

230.4. Inspection and Tests.

230.4.1. All materials shall be subject to inspection by the Engineer at all times.

230.4.2. The strength of the concrete shall be tested by either the standard compression test as designated by ASTM Specification C 39-49 or the concrete flexure test as designated by ASTM Specification C 78.

The City will take samples of the concrete delivered to the job for making concrete tests and the testing of the specimens will be done at the City's expense.

Slump tests will be made by the City in accordance with ASTM Specifications C 143. Slumps shall not exceed the maximum designated for the class and use of the concrete.

All equipment and tools which are used for material handling and performing all parts of the work must meet the approval of the Engineer. The equipment must be kept in full and good working order.

230.4. Protection from Vandals. It will be the Contractor's responsibility to protect fresh concrete from vandals during the curing process. Any concrete damaged by vandals will be inspected by the Engineer and subject to removal if the Engineer judges the damage to create a safety hazard, or would accelerate deterioration of the concrete surface, or if the damage area is unsightly and detracts from the overall aesthetics of the project.

SECTION 231

PORTLAND CEMENT CONCRETE PAVEMENT

231.1. Work Included. This work shall consist of the construction of Portland cement concrete placed with or without reinforcement on a prepared subgrade. The type and dimensions of the pavement will be indicated by the typical section on the construction plans.

231.2. Materials. Concrete used in the construction of Portland cement concrete pavement shall be MoDOT "Pavement" concrete, unless specified otherwise, and all materials, proportioning, air-entrainment, mixing, and transporting for Portland cement concrete shall be in accordance with MoDOT's Missouri Standard Specifications for Highway Construction and with Section 230, Portland Cement Concrete.

Reinforcing steel shall conform to Section 238, Reinforcement for Portland Cement Concrete.

Epoxy for bonding dowels shall be a two-part epoxy meeting the requirements of ASTM C881, Type IV and approved for below grade use. Product shall be Hilti HY150, Sikadur AnchorFix-3 or 4, or approved equal.

231.3. Subgrade and Base.

231.3.1. The subgrade shall be graded, compacted and rolled to ensure maximum density to the exact cross section and elevations and shall be tested with an approved template before concreting. High areas shall be reduced to grade and low areas raised to grade with approved material compacted in place, as directed. Subgrade shall be proof rolled per Section 205.

231.3.2. The base course shall be graded, compacted and rolled to ensure maximum density to the exact cross section and elevations and shall be tested with an approved template before concreting. High areas shall be reduced to grade and low areas raised to grade with approved material compacted in place, as directed. Base course shall be constructed per Section 212.

231.4. Forms shall be of steel or of wood two (2) inches thick, dressed on the top and inside. Built up, battered, bent, twisted, broken or dirty forms shall not be used. Flexible forms may be used for curves of radii less than one hundred (100) feet. Forms shall be cleaned and oiled before use and shall be securely staked and braced and have rigid, tight connections at joints. Face forms are required when forming integral curbs.

231.5. The concrete shall be placed with a minimum of rehandling to avoid segregation. No concrete that has partially hardened or has been contaminated by foreign material shall be deposited on the work, nor shall re-tempered concrete be used. All concrete shall be thoroughly compacted by spading or vibrating to eliminate the voids. Care shall be exercised particularly at and about form and joints to avoid formation of voids or honeycombs and to prevent damage to joint installations.

231.6. Expansion and contraction joints may be sawed or premoulded and shall be

installed as indicated, at right angles to the grade and length of the street unless shown otherwise on the plans. Sawed grooves shall have a depth of at least one-fourth (1/4) the thickness of the concrete and shall be filled with a bituminous joint sealing material.

231.6.1. Premoulded Expansion Joints. Premoulded expansion joints shall be either polychloroprene elastomeric and conform to AASHTO M220 (ASTM D2628) or preformed expansion joint filler per AASHTO M213 (ASTM D1751). One (1) inch premoulded filler shall be installed as noted on the plans, and at all connections with existing concrete structures. Expansion joint materials shall be cut to the full depth of the pavement and integral curb cross section. The top of the expansion joint shall be scraped free of mortar. Expansion joints shall be installed at intervals not to exceed 500 feet whether shown on the drawings or not.

231.6.2. Premoulded Contraction Joints. Premoulded contraction joints shall conform to AASHTO M213 (ASTM D1751). Contraction joints of one-eighth (1/8) inch pressed fiber material shall be installed at intervals of not more than twenty (20) feet.

231.6.3. Longitudinal Joints. Joints between construction lanes shall not be keyed. Joints shall be doweled

231.6.4. Construction Joints. Construction joints may be keyed or butt type and shall be located at the regular location of a contraction joint or not less than ten (10) feet from any other joint. Butt type joints shall have dowels on one (1) foot centers extending at least seven and a half (7.5) inches into and out of the concrete. Construction joints shall be placed at the end of the day's work or wherever concrete placement is suspended for more than thirty (30) minutes.

231.6.5. Transverse contraction joints of premoulded pressed fiber material, dimensions of which are shown on the drawings, shall be installed at intervals of not more than twenty (20) feet.

231.6.6. Dowel bars shall be used to transfer load across all expansion joints or in other locations as shown on the plans. The diameter and length of bars shall be as shown on the plans. Dowel bars shall be smooth round rail or billet steel bars placed as shown on the drawings, and shall be held in position exactly parallel to the surface and center line of the slab by a metal device that shall be left in the pavement. The use of stone, brick or other bulk material for supporting dowels or sleeves will not be permitted. One-half (1/2) of each bar shall be coated with basic lead sulphate, blue lead or red lead paint and with a heavy oil (not grease) to prevent bond. The painted and oiled end of the bar shall also be furnished with an approved paper or metal sleeve so designed as to provide a three-fourths (3/4) inch space at that end of the bar.

Deformed dowel bars which are placed after the concrete has been placed shall be stuck while the concrete is still plastic. Alternatively, the bars may be drilled and epoxied. Smooth bars must be drilled and epoxied if not in place before concrete is placed.

231.6.7. Sawed Joints. Sawed joints shall be provided at a maximum of twenty (20) foot intervals using a special concrete saw which has one or more circular blades at least one-eighth (1/8) inch thick. These may be reinforced abrasive blades or steel blades inlaid with

diamonds (or other types that meet with the approval of the Engineer). In either case the blades shall be cooled and lubricated abundantly with cold water. The joints must be cut within twelve (12) hours of placing concrete, before shrinkage stresses have caused the formation of early cracks.

231.6.8. Joint Filler. After the pavement has been properly cured, all open joints including expansion joints, construction joints, and longitudinal joints, shall be cleaned, primed with a light grade of cut-back asphalt, and poured full of an approved hot poured joint sealing compound. The joint sealing compound shall be either polymeric asphalt based (AASHTO M301, ASTM D3405) or elastomeric-type (AASHTO M282, ASTM D3406), heated and applied in strict accordance with instructions of the manufacturer. Joints must be thoroughly clean and dry immediately before seal is poured and sealing compound shall be poured so that the joint is filled to the level of the adjacent concrete surfaces.

231.7. If the Contractor desires to use a concrete paving machine, the paving machine must be checked and inspected by the Engineer before work begins. Paving machine shall be capable of consolidating and finishing the concrete. Hand finishing shall be provided as needed to provide a quality finished product meeting these specifications. The paving machine may at no time be operated on the finished concrete or on the base which is to be paved, unless permission is granted by the Engineer.

231.8. The temperature of the concrete shall be between sixty and ninety degrees Fahrenheit (60° - 90° F.) when placed in the forms.

231.9. Cold Weather Construction. Cold weather construction shall comply with ACI 306 – Cold Weather Concreting in addition to these specifications. Concreting shall be discontinued when the temperature falls below forty degrees Fahrenheit (40°F.) unless the aggregates or the water are heated to produce the temperatures in Section 231.8 above. However, the Engineer may require that no concrete be poured when in his opinion the concrete might become damaged from freezing due to subsequent falling of the temperature.

a. Mixing water shall be heated to a maximum of one hundred and fifty degrees Fahrenheit (150° F.).

b. Aggregates shall be heated until free of all ice and frost.

c. All covering and heating equipment shall be on hand and approved by the Engineer before any concrete is placed.

d. The use of a non-chloride accelerator shall be used only with the consent of the Engineer.

When the concrete is placed during cold weather there must be means to protect the concrete. This will be done by applying concrete blankets to protect the concrete from freezing, or other approved methods. Such protection shall be continued for at least seven (7) days unless directed otherwise by the Engineer.

In no case may the concrete be placed on a frozen subgrade. The pavement shall not be opened

to traffic or the Contractor's equipment until ordered by the Engineer. Concrete injured by frost action shall be removed and replaced at the Contractor's expense.

In no case may concrete be poured when the air temperature is thirty-two degrees Fahrenheit (32° F.) and below.

231.10. Hot Weather Construction. Hot weather concrete construction shall comply with ACI 305 – Hot Weather Concreting.

231.11. Placing and Finishing Concrete.

231.11.1. Concrete shall be placed in successive batches over the entire width between side forms. Do not place concrete around manholes or other structures until they are at proper grade, alignment, and cross slope. Concrete shall be consolidated by use of vibrating units operating in the concrete. Unless vibrating apparatus is such that the full width of concrete is consolidated in a single passage, a definite system or pattern shall be used in the operation of the vibrator so the full width of concrete in each linear foot of lane will receive adequate and uniform consolidation. The system and methods of vibrating shall be subject to approval of the Engineer. Vibrating equipment shall, under no circumstances, be used as a tool for moving concrete laterally on the grade. Care shall be taken in discharging concrete to avoid segregation. Concrete shall be thoroughly vibrated along the forms or sides and along expansion and key type longitudinal joints by means of a small approved hand-type mechanical vibrator. Care shall be taken that the vibrator does not penetrate the subgrade or dislodge or remove the joints. Concrete shall not extrude below forms. Mixers and trucks used for transport are permitted to discharge concrete by chute or dump directly onto subgrade or prepared base provided underlying material is not damaged or distorted. Honeycomb in concrete base, pavement edge, or curb may be cause for rejection of concrete.

231.11.2. The concrete shall be brought to the proper section by means of a mechanical finishing machine, a vibrating screed or by an approved type of strike-off board. If a strike-off board is used, it shall be constructed of a material that will not warp, shrink or sag and shall weigh not less than ten (10) pounds per lineal foot. The strike-off board shall be used as a tamping template, if other equipment is not provided for this purpose, with an up and down motion while being propelled forward manually. Any of the above devices, if used, shall be adjusted to the exact crown of the pavement. All surfaces shall be consolidated and floated after strike-off prior to final surface finish.

The surface shall be checked with a straight edge not less than ten (10) feet in length, mounted on long handles and any low spots filled in and high spots removed. All disturbed places shall be refloated. The pavement shall not vary more than one-eighth (1/8) inch from a ten (10) foot straight edge laid parallel to the center line. Contractor shall check the surface immediately behind paving operations to correct surface while concrete is still plastic.

The final finishing operation for streets shall be a broom finish, bridge decks shall be combed. The surface of the pavement shall be of uniform texture and to proper grade and cross section. If the Contractor has elected to use the mechanical brooming method and the results are not satisfactory, the Engineer may require that the hand brooming method be used.

a. Hand Brooming. After surface irregularities have been removed, the surface of the concrete shall be given a broom finish. Approved steel or fiber brooms of not less than eighteen (18) inches wide, shall be drawn across the surface from the center line towards each side, with the broom held perpendicular to the surface, one stroke of the broom per width of broom, slightly overlapping adjacent strokes. The corrugations resulting from the broom operation shall be uniform in appearance and not more than one-sixteenth (1/16) inch in depth. Brooming shall be completed before the concrete is in such condition that it will be torn or unduly roughened and before the concrete has obtained its initial set.

b. Mechanical Brooming. A machine capable of producing a finished surface similar to that required for hand brooming may be used for the final finishing of the pavement surface.

c. Combing. A wire comb shall be no less than 10 feet long with a single line of wires exposed to a length of approximately 4 inches. The wire shall be blue tempered and polished spring steel with nominal dimensions of 0.028 inch thick and 0.100 to 0.125 inch wide. The wires shall be spaced to provide 1/2-inch clear space between wires and securely mounted in a rigid head. Except for concrete finished by hand methods, the wire comb shall be mechanically operated and capable of covering the full width of slab in a single pass, at a uniform speed and at a uniform depth. Final approval of the wire comb will be based on satisfactory performance during actual use. Successive passes of the comb shall be overlapped the minimum necessary to attain a continuously textured surface. The surface texture produced shall have an average texture depth of approximately 0.125 inch. Small or irregular areas, or areas not suitable for machine texturing when adjacent surrounding concrete is ready for texturing, may be textured with a hand operated device producing a textured surface equivalent to that required for machine combing.

The Contractor will be held responsible for the correct alignment, grade and contour specified. Any spots higher than one-eighth (1/8) inch in ten (10) feet, for concrete pavement shall be ground to the required surface by the Contractor at his own expense.

All exposed edges of the concrete at joints, other than sawed joints, and back of curb shall be finished with an edging tool of one-fourth (1/4) inch radius.

231.12. Diamond Grinding. Grind the riding surface to reduce or eliminate the irregularities. Use a self-propelled grinding machine with diamond blades mounted on a multi-blade arbor. Avoid using equipment that causes excessive ravels, aggregate fractures, or spalls. Provide uniform texture the full width of the lane. Transverse grooving will not be required.

Use vacuum equipment or other continuous methods to remove grinding slurry and residue. Prevent the grinding slurry from flowing across lanes being used by traffic. After corrections have been made to the riding surface, test the pavement for smoothness using the same technique used to determine smoothness originally.

Where smoothness is determined through the use of a profilograph, run two traces in each

lane that has been corrected. Run one trace three feet (one meter) from the longitudinal joint between the lanes, and another trace three feet (one meter) from the shoulder or curb edge of the lane. Assure that the profilograph testing and evaluation is preformed by a trained and certified operator. Within two days after the corrections to the riding surface are made, furnish the Engineer with the profilogram and its evaluation.

Evaluate the profilogram of the corrected riding surface in 250 ft. sections per lane. The required profile index per trace is 15 inches per mile. Perform additional grinding as required to attain the required profile index. Correct all deviations (in excess of ½ inch in a length of 25 feet) within each section regardless of the profile index value.

231.13. Integral Curb. Integral curb shall be constructed at each side of the pavement conforming to the dimensions and design as shown on plans and shall be constructed of the same concrete as the pavement.

The curb shall be placed immediately after all pavement finishing operations but before the concrete has taken its initial set. The time elapsing between placing the pavement and placing the curb shall not be more than forty-five (45) minutes. A thorough bond shall be obtained between the pavement and curb; if necessary the pavement shall be roughened by a trowel or wire brush. After the concrete has been placed in the curb form, it shall be vibrated, spudded or tamped to ensure sufficient density to prevent honeycomb. When the concrete has sufficiently set, the face forms shall be removed and the curb finished to proper alignment, grade and cross section by troweling and floating with properly shaped tools. No plastering with grout will be permitted. The final finish shall be made by brushing transversely from bottom to top.

All transverse joints in the pavement shall be matched evenly and through the curb and shall conform to the shape of the curb. Finished surface of curb and gutter shall be checked for no more than ¼" deviation in 10 feet via straightedge and corrected as necessary. Gutter shall be checked with a 4' carpenter's level while concrete is still plastic.

231.14. Curing. After the concrete has been finally finished and the water has left the surface, the exposed surface shall be sprayed with a transparent membrane solution meeting the requirements of AASHTO M148 Type 2. The curing material shall be applied in strict accordance with the manufacturer's recommendations and as directed by the Engineer. If rain falls on the newly coated pavement before the film has dried sufficiently to resist damage, or if the film is damaged in any other way, the Contractor will be required to apply additional curing material to the affected portions. Application shall be by a pressure spray at a uniform rate not to exceed two hundred (200) square feet of surface per gallon of spray. If hairline cracking develops before the membrane can be applied, the concrete shall be initially cured with wet burlap before the membrane is applied. After the side forms are removed the sides shall be sprayed with the curing compound.

231.15. Backfilling Slab Edges and Curbs. A minimum of 24 hours shall elapse before forms are removed and 5 days shall elapse or the concrete must have attained 75% of its 28 day compressive strength before pavement is backfilled unless otherwise approved by the Engineer. Backfill shall be accomplished in accordance with Section 201 entitled "Excavation and Embankment." The Contractor shall be responsible for the repair of any existing street pavement damaged by the construction to the satisfaction of the Engineer. Before the pavement

is opened to traffic or the work accepted, the area outside the slab edge or back of the curb shall be backfilled with selected earth approved by the Engineer, thoroughly compacted in layers not exceeding six (6) inches in depth and neatly graded off flush with the slab or top of the curb or as shown on the plans.

231.16. Opening to Traffic. The concrete pavement may not be opened to low volume, light construction traffic until five (5) full days have passed since the concrete was placed unless otherwise directed by the Engineer. Base and pavement shall not be opened to all types of traffic until concrete has attained a compressive strength of 3,500 psi and all sawed joints that have opened more than ¼" are sealed. Pavement shall be broom clean prior to opening to traffic.

231.17. Protection. As soon as the placing of concrete begins, the Contractor shall provide means for completely protecting the pavement from any and all damage or marring of the surface. Protect the concrete from rain. Barricades, lights and signals shall be provided as needed. At all places where it is necessary to maintain public or private crossing over the pavement the Contractor shall at his own expense provide and maintain bridges or other devices that will prevent the damage or marring of the concrete.

231.18. Repairing Defects. Defects shall be repaired per Section 239.

231.19. Inspection and Testing. Inspection and testing shall be performed in accordance with Section 230.4. Concrete for pavement shall have a slump of two (2) to four (4) inches when using ready-mix concrete and one (1) to three (3) inches when using a concrete paving machine. Concrete used for paving shall have a minimum average compressive strength of 4,000 psi at twenty-eight (28) days and a minimum average flexural strength of 550 psi. At least one set of three (3) test cylinders for each 250 feet of street lane but not less than one set for any one day's operations shall be reserved for testing. The making, curing, and handling of each test specimen shall be in accordance with ASTM C31. Each set of concrete cylinders shall be tested as follows:

One cylinder shall be broken to determine 7-day strength
One cylinder shall be broken at 28-days to determine ultimate strength
One cylinder shall be held and not tested unless the 28-day average strength is below the specified strength or unless otherwise directed by the Engineer.

Unacceptable concrete shall be removed and replaced or repaired to the satisfaction of the Engineer at the Contractor's expense.

231.20. Basis of Payment. Portland cement concrete pavement will be paid for at the Contract price per square yard for Portland cement concrete pavement in place, which price includes preparation of subgrade, backfilling of curbs, all materials, all equipment, tools, labor and work incidental thereto. Payment will be retained for any pavement with defects. Defects shall be repaired per Section 239. Payment will be made under:

Item No. 231.1. Portland cement concrete pavement, per square yard

SECTION 232

CONCRETE CURB AND GUTTER

232.1. Description. Concrete curb and gutter shall consist of Portland cement concrete, placed with or without reinforcement on a prepared subgrade. The type and dimensions shall be as shown on the construction plans. Generally curbing is to be placed prior to final placement of pavement or sidewalk. See section 231 for integral concrete curb.

232.2. Materials. Concrete used in the construction of curb and gutter shall be MoDOT "Pavement" concrete, unless otherwise specified; and all materials, proportioning, air-entraining, mixing, and transporting for Portland cement concrete shall be in accordance with MoDOT's Missouri Standard Specifications for Highway Construction and with Section 230, Portland Cement Concrete. Reinforcing steel shall conform to Section 238, Reinforcement for Portland Cement Concrete.

232.3. Removals. Remove existing curbing to nearest contraction or expansion joint, or with approval of Engineer, curb may be sawn such that no free section is less than 5' long and curbing is sawed a minimum of 2" below any exposed surface or sufficiently to prevent disturbance of adjacent structures or slabs. The adjacent pavement shall be removed at least 18" wide for construction of new curb. The pavement may be sawed at the edge of the curb if the edge of pavement is not raveled by sawing and that when the curb is placed the transition from the pavement to curb is smooth, neat, and workmanlike.

232.3. Subgrade. The subgrade shall be graded, compacted and rolled to ensure maximum density to the exact cross section and elevations shown on the plans. The subgrade shall be moistened in advance of depositing concrete, but shall not be muddy or excessively wet.

232.4. Forms. The forms for this work shall be metal or wood of full depth of the concrete, straight, free from warp and of sufficient rigidity to prevent distortion due to the pressure of the concrete and other loads incidental to the construction operations. The forms shall be substantial and unyielding and shall be so designed that the finished concrete will conform to the proper dimensions and contours. Forms shall be set and maintained true to the line designated until the concrete is sufficiently hardened. Forms shall be designed to permit their removal without damage to the concrete. Forms shall not vary from true line and grade by more than 1/8" in 10'. Forms shall be thoroughly cleaned and oiled with a form release agent before concrete is placed. Forms shall be joined neatly and tightly for a distance of at least one hundred (100) feet in advance of the point of placing concrete. Face forms will be used with all curbs and are to have a height equal to or greater than the height of the curb face being formed.

A slip-form curb machine may be used in lieu of forms. The machine must be equipped with mechanical internal vibrators and be capable of placing curb to the correct cross section, line and grade within allowable tolerances.

232.5. Mixing, Handling and Placing, Finishing and Curing Concrete. The mixing, handling and placing, finishing and curing of concrete for curb and gutter shall be in accordance with the appropriate requirements as designated under Section 231, Portland Cement Concrete Pavement, unless otherwise specifically designated.

Concrete curb and gutter shall be constructed in sections having a uniform length of ten (10) feet maximum. The length of a single section may be reduced to a minimum of five (5) feet where necessary for closure. Expansion joints shall be provided at intervals of ninety (90) feet. All joints in concrete curb and gutter shall receive joint filler in accordance with Section 231.6.8 of these specifications. Expansion joints shall use 1" thick preformed joint filler in a single piece cut to the correct curb section. The face and top of the curb and gutter shall be floated smooth and the edges shall be tooled to a ¼" radius as shown in typical section. Joints shall be at a right angle to curbing and shall be true and plumb. Contraction joints for curbs on asphalt streets shall be spaced at intervals of not less than 10 feet or more than 15 feet. Contraction joints shall extend through the entire curb section from the top of curb to a depth 2 inches below pavement surface.

232.6. Backfill. After the concrete has set sufficiently, as determined by the Engineer, the back of curbs shall be back-filled to the required elevation with suitable material which shall be compacted in layers of not more than six (6) inches until firm and solid.

232.7. Inspection and Tests. Inspection and testing shall be performed in accordance with the requirements of Section 230.4, Concrete for Concrete Curb and Gutter, shall have a slump of two (2) to four (4) inches.

232.8. Basis of Payment. Excavation for concrete curb and gutter will be paid for at the Contract unit price per cubic yard for common excavation, under Section 201 Excavation and Embankment with the exception of backfill and will be measured to the pay lines indicated on the Contract drawings.

Concrete curb and gutter will be paid for at the Contract unit price per lineal foot for concrete curb and gutter complete in place, which price will include all materials, forms, equipment, tools, labor and work incidental thereto. Payment will be made under:

Item 232. Concrete curb and gutter, per linear foot.

SECTION 234

CONCRETE SIDEWALKS

234.1. Description. Concrete sidewalks shall be constructed to the line, grade and dimensions shown on the plans or as established by the Engineer. Unless otherwise specifically designated, concrete sidewalks shall have a width of five (5) feet and a depth of four (4) inches, except that at driveways or other points designated on the plans, the depth shall be increased to six (6) inches.

232.2. Concrete. Concrete used in the construction of sidewalks shall be MoDOT "Pavement" concrete as specified in MoDOT's Missouri Standard Specifications for Highway Construction and with Section 230, Portland Cement Concrete, with the additional requirement that the amount of chert in crushed limestone aggregate shall not exceed two percent (2%) by weight. All materials, proportioning, air-entraining, mixing, and transporting for concrete shall be in accordance with Section 230.

234.3. Detectable Warnings. Truncated Domes are required standardized surface features built in or applied to walking surfaces on sidewalks or ramps to warn visually impaired people of hazards on a circulation path. Those hazards include, but are not limited to interfaces between sidewalks and areas where moving vehicles may be present.

a. Dimensions. Detectable warnings shall consist of raised truncated domes with a 0.9 inch nominal diameter, a nominal 0.2 inch height, and a nominal center to center spacing between 1.6 in. and 2.4 in. They shall extend across the full walking surface of the walk or ramp, and shall be 2 feet long in the direction of pedestrian travel.

b. Materials. The material used to provide contrast shall be an integral part of the walking surface. Detectable warning plates are to be 24"x36", 24"x48", or 24"x60" and Colonial or Brick Red (Federal Color No. 20109) in color. Detectable Warning tile to be ADA Solutions Part number 2436REPBR, 2448REPBR, or 2460REPBR or approved equal. In situations that detectable warnings are to be placed around a radius the detectable warning tile to be ADA Solutions Part number 24RADREPBR or approved equal. Stamped concrete is not acceptable.

1. Detectable warnings are to meet ADA and State requirements and meet dynamic vehicle loading, AASHTO HS20-44 wheel load test requirements.

2. Detectable warning must be a minimum ½" thick or have a perimeter flange at least 5/8" thick.

3. Bolts shall be stainless steel, minimum 3/8" diameter and bolt caps shall be provided.

4. Embeds shall be galvanized steel, stainless steel or approved equal.

c. Installation.

1. The physical characteristics of the concrete shall be consistent with the Contract specifications while maintaining a slump range of 2-4 inches to permit solid placement of the cast in place detectable warning tiles. An overly wet mix will cause the tile to float. Under these conditions, suitable weights such as 2 concrete blocks or sandbags (25 lb) shall be placed on each tile.

2. A four foot long level, 25 lb. weights, and a large non-marring rubber mallet are specific to the installation of the cast in place tile system.

3. The factory-installed plastic sheeting must remain in place during the entire installation process to protect the finished surface of the tile.

4. When preparing to set the tile, it is important that no concrete be removed in the area to accept the tile. It is imperative that the installation technique eliminates any air voids under the tile. Holes in the tile perimeter allow air to escape during the installation process. Concrete will flow through the large holes in each embedment flange on the underside of the tile. This will lock the tile solidly into the cured concrete.

5. The concrete shall be poured and finished true and smooth to the required dimensions and slope prior to the tile placement. The tile shall be placed true and square to the curb edge in accordance with the Contract drawings. The cast in place detectable tile shall be tamped into the fresh concrete to ensure that the field level of the tile is flush to the adjacent concrete surface. The embedment process should not be accomplished by stepping on the tile as this may cause uneven setting which can result in air voids under the tile surface.

234.4. Construction.

a. Subgrade. Concrete sidewalks shall be constructed on a prepared smooth subgrade of uniform density. The subgrade shall be graded, compacted and rolled to ensure maximum density to the exact cross section and elevations and shall be tested with an approved template before concreting. Large boulders and ledge rock found in the subgrade shall be removed to a minimum depth of six (6) inches below the finished subgrade elevation and the space shall be backfilled with suitable material which shall be thoroughly compacted by rolling or tamping. The Contractor shall furnish a template and shall thoroughly check the subgrade prior to depositing concrete.

b. Forms. The forms shall be of either metal or wood and shall be straight, free from warp, of sufficient strength to resist springing during construction, and of a height equal to the full depth of the sidewalk to be constructed. Wood forms shall have a minimum nominal thickness of two (2) inches. Metal forms shall be of a type approved by the Engineer. Flexible or curved forms of proper radius shall be furnished on curves. The forms shall be thoroughly cleaned, well oiled, securely staked, braced, and held to the required line and grade before any concrete is deposited.

234.5. Depositing Concrete. The concrete shall be deposited between the forms on moistened subgrade and shall be struck off and compacted to the required thickness. Concrete shall be compacted by internal vibrating equipment.

234.6. Joints. Saw joints shall be spaced approximately at five (5) feet intervals, and shall be provided for the full width to a depth of one (1) to two (2) inches. Joints shall be sawn within twelve (12) hours of concrete placement after initial set and before shrinkage cracks occur. **Tooled joints are not acceptable.**

Premoulded expansion joint material, one-half (1/2) inch thick, shall be installed in the sidewalk for its full depth wherever it meets another sidewalk, driveway, building, curb, lighting standard, fireplug, or other rigid object with the exception of curb inlets and junction boxes. Expansion joints shall be placed on all four (4) sides of the square formed by the intersection of two (2) sidewalks. When the sidewalk fills the space between the curb and a building or wall, an expansion joint shall be placed between the sidewalk and the curb and between the sidewalk and the building or wall.

234.7. Finishing. After the concrete has been brought true to line and grade it shall be finished to a medium rough finish by use of a stiff broom or other approved method to produce an even, gritty texture. All edges shall be rounded with an edging tool to one-fourth (1/4) inch radius.

234.8. Curing. Immediately after finishing, the sidewalk shall be cured in the same manner as required under Section 231.

234.9. Hot and Cold Weather Concreting. Temperature of the concrete and hot and cold weather construction requirements shall be the same as specified in Section 231.

234.10. Backfilling. After the concrete has sufficiently set, the form shall be removed and the space on each side of the walk shall be backfilled. The earth shall be compacted and graded in a manner satisfactory to the Engineer.

234.11. Inspection and tests. Inspection and testing shall be performed in accordance with the requirements of Section 230.4. Concrete for concrete sidewalks shall have a slump of two (2) to four (4) inches.

234.12. Basis of payment. Concrete sidewalks, complete in place and accepted, will be paid for at the Contract unit price per square foot, which payment shall be full compensation for furnishing, hauling and placing all materials including detectable warnings, preparing subgrade, forms and all joints, backfilling, equipment, tools, labor, and work incidental thereto. Payment will be made under:

Item No. 234.1. 4" or 6" Concrete sidewalks, per square foot.

SECTION 235

CONCRETE STEPS

235.1. Description. Concrete steps shall be constructed where shown on the plans and in accordance with the design and instruction of the Engineer.

235.2. Materials. Concrete used in the construction of steps shall be MoDOT "Pavement" concrete, and all materials, proportioning, air-entraining, mixing, and transporting for concrete shall be in accordance with MoDOT's Missouri Standard Specifications for Highway Construction and with Section 230, Portland Cement Concrete. Reinforcing steel shall conform to Section 238, Reinforcement for Portland Cement Concrete.

235.3. Construction.

a. Subgrade. Concrete steps shall be constructed on a prepared smooth subgrade of uniform density. Large boulders and ledge rock found in the subgrade shall be removed to a minimum depth of six (6) inches below the finished subgrade elevation and the space shall be backfilled with suitable material which shall be thoroughly compacted by rolling or tamping. The Contractor shall furnish a template and shall thoroughly check the subgrade prior to depositing concrete.

b. Forms. The forms shall be of either metal or wood and shall be straight, free from warp, of sufficient strength to resist springing during construction, and of a height equal to the full depth of the steps to be constructed. Wood forms shall have a minimum thickness of two (2) inches. Metal form shall be of a type approved by the Engineer. Flexible or curved forms of proper radius shall be furnished on curves. The forms shall be thoroughly cleaned, well oiled, securely staked, braced, and held to the required line and grade before any concrete is deposited.

c. Dimensions. If steps are constructed without construction plans, the steps shall be laid out so that between landings treads shall be uniform width and rises shall be uniform height without any irregularity.

d. Hot and Cold Weather. Hot and cold weather placement shall be in conformance with Section 231.

235.4. Depositing concrete. The concrete shall be deposited between the forms on the moistened subgrade and shall be struck off and compacted to the required thickness. It shall be tamped sufficiently to bring the mortar to the top surface, and the surface shall then receive a final broom finish unless otherwise directed by the Engineer. All edges shall be rounded with an edging tool to one-fourth (1/4) inch radius.

Premoulded expansion joint material shall be installed for the full width and depth of the cross section where the steps abut sidewalks, curbs and other structures.

Immediately after finishing, the steps shall be cured in the same manner as required under Section 231, Curing of Portland Cement Concrete Pavement.

235.5. Backfilling. After the concrete has sufficiently set, the Contractor shall remove the forms and shall backfill the space on each side of the steps. The earth shall be compacted and graded in a manner satisfactory to the Engineer.

235.6. Inspection and Tests. Inspection and testing shall be performed in accordance with the requirements of Section 230.4. Concrete for steps shall have a slump of two (2) to four (4) inches.

235.7. Method of Measurement. Tread area of steps in square feet, measured to the nearest square foot.

235.8. Basis of Payment. Payment for concrete steps, including reinforcing steel as required, complete in place, including necessary excavation, all material, equipment, tools, labor and any work incidental thereto, will be considered as completely covered by the Contract price per square foot. Payment will be made under:

Item No. 235.1.R. Concrete steps (reinforced), per square foot.
Item No. 235.1.NR. Concrete steps (non-reinforced), per square foot.

SECTION 236

PATCHING PORTLAND CEMENT CONCRETE PAVEMENT

236.1. Description. Where noted on the plans, or as directed by the Engineer, the Contractor will be required to patch the existing Portland cement concrete pavement.

236.2. Construction. After all pavement in the patch area has been removed as required, the subgrade shall be excavated to provide an under-cut approximately two (2) inches wide and two (2) inches deep. Should the subgrade be unstable, such undesirable material as may be encountered shall be excavated to a minimum depth of twelve (12) inches below the top of the finished concrete patch. The subgrade shall then be constructed to proper elevation by filling with approved aggregate material and compacted until all subgrade weakness has been corrected.

The area shall then be paved with MoDOT "Pavement" concrete as specified in MoDOT's Missouri Standard Specifications for Highway Constructon and with Section 230, Portland Cement Concrete. All appropriate provisions of Sections 230 and 231 shall apply, except for the following items:

a. Hand finishing will be permitted.

b. Transparent membrane curing solution will not be permitted if the pavement is to be resurfaced.

Unless otherwise noted on the plans, material excavated from subgrade shall be disposed of away from the project at locations which are the sole responsibility of the Contractor.

236.3. Payment. Payment for the foregoing work complete in place shall include excavation, compacting the subgrade, furnishing all materials including those which may be required for subgrade stabilization, tools, equipment, labor and any work incidental thereto. Payment will be made under:

Item No. 236.1. Patching Portland cement concrete pavement, per square yard.

SECTION 237

CONCRETE DRIVEWAY PAVEMENT

237.1. Description. Where called for on the plans, or as directed by the Engineer, concrete driveway pavement shall be constructed to the line, grade and dimensions shown on plans.

237.2. Concrete used in the construction of driveway pavement shall be MoDOT "Pavement" concrete, and all materials, proportioning, air entrainment, mixing, and transporting for the concrete shall be in accordance MoDOT's Missouri Standard Specifications for Highway Construction and with Section 230, Portland Cement Concrete.

The mixing, handling and placing, finishing and curing of concrete for driveways shall be in accordance with the appropriate requirements of Section 231, Portland Cement Concrete Pavement.

237.3. Basis of Payment. Payment for concrete driveway pavement, complete in place, including the removal of existing driveway surfacing, all materials, all joints, equipment, tools, labor and work incidental thereto will be considered as completely covered by the Contract price to nearest one-tenth (1/10) of a square yard. Payment will be made under:

Item No. 237.1. 6" or 7" Concrete driveway pavement, per square yard.

SECTION 238

REINFORCEMENT FOR PORTLAND CEMENT CONCRETE

238.1. Description. This item shall include billet-steel bars, rail-steel bars, axle-steel bars, cold-drawn steel wire, fabricated steel bars or rod mats and welded steel wire fabric for concrete reinforcement.

238.2. Materials. All materials shall conform to the requirements of the American Society for Testing Materials as hereinafter designated. Only one grade of steel will be allowed on any one Contract, unless otherwise noted on the plans or in the special provisions. Rebar is to be ASTM A-615 Grade 60 unless otherwise specified. Rebar to be welded shall meet the requirements of ASTM A-706.

238.3. Order Lists. Before ordering material, all order lists and bending diagrams shall be furnished by the Contractor for the approval of the Engineer and no materials shall be ordered until such lists and bending diagrams have been approved. The approval of order lists and bending diagrams by the Engineer shall in no way relieve the Contractor of responsibility for the correctness of such lists and diagrams. Any expense incidental to the revision of material furnished in accordance with such lists and diagrams to make it comply with the design drawings shall be borne by the Contractor.

238.4. Protection of Material. Steel reinforcement shall be protected at all times from injury. When placed in the work, it shall be free from dirt, detrimental scale, paint, oil or other foreign substance. However, when steel has on its surface detrimental rust, loose scale and dust which is easily removable, it may be cleaned by a satisfactory method, if approved by the Engineer.

238.5. Fabrication. Bent bar reinforcement shall be cold bent to the shapes shown on the plans, and unless otherwise provided on the plans or by authorization, bends shall be made in accordance with the following requirements:

Stirrups and tie bars shall be bent around a pin having a diameter not less than two (2) times the minimum thickness of the bar. Bends for other bars shall be made around a pin having a diameter not less than six (6) times the minimum thickness except for bars larger than one (1) inch, in which case the bends shall be made around a pin of eight (8) bar diameters.

Bar reinforcement shall be shipped in standard bundles, tagged and marked in accordance with the *Code of Standard Practice of the Concrete Reinforcement Steel Institute.*

238.6. Bar Reinforcement. Bar reinforcement shall conform to the requirements of the ASTM Specifications Designation A 15-58T for billet-steel bars or ASTM Designation A 16-59T for rail steel bars, or the latest revision thereof.

All bars shall be of the deformed type conforming to ASTM Designation A 305-56T or the latest revision thereof, unless otherwise specified.

The use of twisted bars is not permitted. Steel for all bars shall be made by the open

hearth process, unless otherwise called for in the special provisions of the plans.

238.7. Wire and Wire Mesh. Wire shall conform to ASTM Designation A 82-58T for cold-drawn steel wire for concrete reinforcement, or the latest revision thereof.

Wire mesh, when used as reinforcement in concrete, shall conform to ASTM Designation A 185-58T Welded Steel Wire Fabric, or the latest revision thereof. Rolled fabric reinforcement is not acceptable. The type of mesh shall be approved by the Engineer.

238.8. Bar Mat Reinforcement. Bar mat reinforcement for concrete shall conform to ASTM Designation A 184-37 the specification for fabricated steel bar or rod mats, or the latest revision thereof.

238.9. Placing and Fastening. All steel reinforcement shall be accurately placed in the position shown on the plans and firmly held during the placing and setting of concrete. When placed in the work, it shall be free from dirt, detrimental rust, loose scale, paint, oil or other foreign material. Bars shall be tied at all intersections except where spacing is less than one (1) foot in each direction when alternate intersections shall be tied. Ends of all ties shall be bent facing away from the exposed surface.

Bar supports shall be placed at a distance such that under construction loading the bars remain in the correct position. In no case shall bar supports be placed at greater than a 5 foot spacing. Wire mesh shall be supported using continuous chairs and shall be placed at no greater than 2-foot on center.

Distances from the forms shall be maintained by means of stays, ties, hangers, bolsters, or other approved supports. Metal chairs which are in contact with the exterior surface of the concrete shall be plastic dipped. Layers of bars shall be separated by standees or by other equally suitable devices. The use of cement blocks, pebbles, pieces of broken stone or brick, metal pipe and wooden blocks shall not be permitted. The minimum spacing center to center of parallel bars shall be two and a half (2 1/2) times the diameter of round or three (3) times the side dimension of square bars, but in no case shall the clear distance between the bars be less than one and a half (1 1/2) times the maximum size of the coarse aggregate. Reinforcement in any number shall be placed and then inspected and approved by the Engineer before the placing of concrete begins. Concrete placed in violation of this provision may be rejected and removal required.

238.10. Splicing. All reinforcement shall be furnished in the full lengths indicated on the plans. Splicing of bars, except where shown on the plans, will not be permitted without the written approval of the Engineer. Splices shall be staggered as far as possible.

Unless otherwise shown on the plans, bars in the bottom of beams and girders, and in wall, columns and haunches shall be lapped twenty (20) diameters and bars near the top of beams and girders having more than twelve (12) inches of concrete under the bars shall be lapped forty (40) diameters, to make the splice. In lapped splices, the bars shall be placed in contact and wired together in such a manner as to maintain a clearance of not less than the minimum clear distance to other bars and the minimum distance to the surface of the concrete, as specified above under Section 238.9 - Placing and Fastening. Welding of reinforcement steel

shall be done only if detailed on the plans or if authorized by the Engineer in writing. Welding shall conform to the current specification for *Welded Highway and Railway Bridges* of the American Welding Society.

238.11. Lapping. Sheets of mesh or bar mat reinforcement shall overlap each other sufficiently to maintain a uniform strength and shall be securely fastened at the ends and edges. The edge lap shall not be less than one (1) mesh in width.

238.12. Substitutions. Substitution of different size bars will be permitted only with specific authorization by the Engineer. If steel is substituted, it shall have an area equivalent to the design area, or larger.

238.14. Payment. There will be no direct payment for furnishing and installing reinforcement but the whole cost and expense of such work to the Contractor must be included by him in the price bid in items that are to be reinforced.

SECTION 239

REPAIR OF CONCRETE PAVEMENT

239.1. Description. Portland Cement Concrete Pavement shall be repaired in accordance with this section. Contractor shall submit a schedule of repairs to the Engineer prior to commencing with repairs.

239.2 Schedule of repairs. Assess the defects in the streets and prepare a plan conforming with the chart below.

Defect Type	Defect Direction	Defect Location	Description	Repair Procedure	Alternate Procedure
Plastic Shrinkage Crack	Any	Anywhere	Only partially Penetrates Depth	Do nothing	Fill with HMWM[2]
Uncontrolled Crack	Transverse	Mid-slab	Full-depth	Saw and seal Crack	LTR[3]
Uncontrolled Crack	Transverse	Crosses or ends at Transverse joint	Full-depth	Saw and seal the Crack; Epoxy Uncracked joint	
Uncontrolled Crack	Transverse	Relatively parallel and Within 5 ft of joint	Full-depth	Saw and seal the Crack; Seal joint	FDR[4] to replace Crack and joint
Saw cut or Uncontrolled Crack	Transverse	Anywhere	Spalled	Repair spall by PDR[5] if crack not removed	
Uncontrolled Crack	Longitudinal	Relatively parallel & within 1 ft. of joint; may cross or end at longitudinal joint	Full-depth	Saw and seal the Crack; Epoxy Uncracked joint	Cross-stitch[1] crack
Uncontrolled Crack	Longitudinal	Relatively parallel & in wheel path 1-4.5 ft from joint	Full-depth	Remove and replace slab	Cross-stitch[1] crack
Uncontrolled Crack	Longitudinal	Relatively parallel and further than 4.5 ft from a long. joint or edge	Full-depth	Cross-stitch[1] crack; Seal longitudinal joint	
Saw cut or uncontrolled crack	Longitudinal	Anywhere	Spalled	Repair spall by PDR[5] if crack not removed	
Uncontrolled crack	Diagonal	Anywhere	Full-depth	FDR[4]	
Uncontrolled crack	Multiple per slab	Anywhere	Two cracks dividing slab into 3 or more pieces	Remove and replace slab	

[1]Cross-stitching; for longitudinal cracks only, drill ¾" holes at 35° angle, alternating from each side of joint on 30-36 in. spacing. Epoxy #5 epoxy coated deformed steel tiebars into hole.

[2]HMWM = High molecular weight methacrylate poured over surface and sprinkled with sand for skid resistance.
[3]LTR = load-transfer restoration; 3 dowel bars per wheel path grouted into slots sawed across the crack; Slots must be parallel to each other and the longitudinal joint.
[4]FDR = full-depth repair; 10 ft long by one lane wide. Extend to nearest transverse contraction joint if 10 ft repair would leave a segment of pavement less than 10 ft long.
[5]PDR = partial-depth repair; Saw around spall leaving 2 in. between spall and 2 in. deep perimeter saw. Chip concrete free, then clean and apply bonding agent to patch area. Place a separating medium along any abutting joint or crack. Fill area with patching mixture.

239.3. Basis of Payment: There will be no additional payment for repair of defects. Payment for pavement work will be retained until defects are corrected.

SECTION 240

COLD MILLING

240.1. Description. This section includes cold milling pavement surfaces.

240.2. Equipment. Milling the surface of pavements shall be completed by the use of a milling machine conforming to the following:

a. Machine. The cold milling machine shall be self-propelled and shall have in combination the means of milling and cutting, without softening the old surface and blading the cuttings into a single windrow, or depositing them directly into a truck.

b. Air Pollution. The machine shall be equipped with a dust suppression system including water storage tanks and high pressure spray bars.

c. Operating Width. It is desirable that the cutting width be greater than 6 feet. In the event the cutting width is less than 6 feet a system of electronic grade control for consecutive passes will be required.

d. Cutting Drum. The cutting drum shall be totally enclosed to prevent discharge of any loosened material on adjacent work areas.

e. Warning Light. The milling machine shall be equipped with a flashing warning light visible from 360 degrees. The light shall be mounted near the rear of the machine, at least 2 feet above the highest part of the milling machine, and shall be used whenever the machine is being used or moved upon the City streets.

240.3. Construction Details.

240.3.1. Methods of Operations for Milling:

1. Operator. The milling machine shall be operated by an experienced and capable operator.

2. Utilities. Street surfaces adjacent to manholes, water valves and other utility extensions, shall be completely removed to the full depth of cut specified for the street unless otherwise specified by the Engineer. Any damages are to be repaired by Contractor at Contractor's expense. After removal, place temporary wedge of bituminous around appurtenance to allow safe transition by through traffic.

3. Material Disposal. The material windrowed by the machine shall be removed immediately from the surface of the pavement and properly disposed of by the Contractor.

4. Surface Conditions. The drum lacing patterns shall produce a smooth surface finish after milling, with groove depths not to exceed 1/4 inch and groove spacing not to exceed 1 inch unless otherwise approved by the Engineer.

240.3.2. Types of Cuts to be made by Milling:

1. Leveling. Sufficient passes shall be made such that all irregularities or high spots are eliminated, and that 100% of the surface is milled.

2. Average Depth. Sufficient passes, or cuts, shall be made in order to remove a specified depth over the entire street section. These depths will be designated in the Contract Documents.

3. Curb Cut. Sufficient passes or cuts shall be made in order to remove a specified depth at the curb for a specified width. The depth at the width furthest from the curb is 0. These dimensions will be designated in the Contract Documents.

4. Bridge Deck Milling. Sufficient passes, or cuts, shall be made in order to remove the material as specified on-the plans or in the Contract Documents.

240.3.3. Cleanup. All loose asphalt and debris shall be removed from the street surface and curb and gutter. Any material and debris that adheres to the curb and gutter shall be removed.

240.4. Method of measurement. Cold milling will be measured per square yard to the nearest tenth for the specified depth.

240.5. Basis of payment. Cold milling will be paid for by one of the following:

Item No. 240.1. Contract unit bid price, per square yard.
Item No. 240.2. Contract lump sum bid price.

SECTION 241

MAINTENANCE OF TRAFFIC

241.1 Description. This section governs the furnishing of all labor, equipment and tools, and for the performance of all work necessary to provide Maintenance of Traffic as specified herein, on the plans or within the Contract Documents.

241.2 General. The Contractor is required to maintain access to all properties served by the streets within the construction site limits. Convenient access to driveways, houses and buildings along the line of the work shall be maintained at least each morning and evening and temporary approaches to crossings or intersecting roads or streets shall be provided and kept in good condition.

241.3 Public Convenience. Unless otherwise provided in the Technical Specifications, all public traffic shall be permitted to pass through the work, and the Contractor shall so conduct his operations as to offer the least possible obstruction and inconvenience to the public. He shall have under construction no greater length or amount of work than can be prosecuted properly with due regard to the rights of the public, and the Engineer shall be the sole judge of the length or amount of work which will afford proper convenience to the public. The Contractor shall erect warning and directional signs as may be necessary in the opinion of the Engineer, for expediting the passage of public traffic through or around the work. All such signs and traffic maintenance shall be subject to the approval of the Engineer and he shall be notified twenty-four (24) hours in advance of any disturbance of existing traffic patterns.

Where pipelines to be installed under the Contract across certain designated streets or highways, the Contractor shall be required to open the trench for only one-half (1/2) the width of the pavement at any one time so that one-way traffic may be maintained, unless specified otherwise in the Technical Specifications.

241.4 Public Safety. The Contractor shall furnish, erect, and maintain such warning lights, barricades, bridges, and other devices as are necessary to prevent accidents and avoid damage or injury to the public and as directed by the Engineer. The adequacy of warning and protective measures for public safety is the responsibility of the Contractor. No action or inaction by the Engineer shall relieve or abrogate the Contractor's obligation to furnish and pay for these devices.

The Contractor shall notify the City Joint Communication Office of all road closures in advance, and keep them notified of all changes so that emergency vehicles will know, at all times, of appropriate response routes.

Forty-eight (48) hours in advance of beginning any work, the Contractor shall notify the Engineer in writing of the name, location, and twenty-four (24) hour per day telephone number of the person designated to be responsible for the barricade and warning devices for the project. Said persons must be approved by the Engineer and must be available on a twenty-four (24) hour basis for maintaining, placing, and replacing barricades and warning devices.

241.5 Traffic Maintenance and Warning Devices. The Contractor will be responsible for arranging for installation of the necessary traffic control devices (with the exception of the barricades and other channelizing devices) a minimum of 48 hours prior to beginning the project so that inspection can be conducted by the Engineer.

The Contractor shall furnish all construction signs to be used on the job site and on the approaches to the job site unless otherwise provided in the Technical Specifications. All signs and traffic control devices used for the detouring or routing of traffic in, around, and through the construction area shall conform to the standards of the City of Columbia as set forth in the attached standard detail sheets or according to the latest edition of the Manual of Uniform Traffic Control Devices (MUTCD). The approximate quantity of traffic control devices is listed in the traffic control plan. The actual quantities of traffic control devices will vary depending on the construction sequence. No itemized list of actual quantities or additional payment will be made for devices needed in excess of the approximate quantity shown.

241.6 Flashers and other traffic control devices. All traffic control devices shall be maintained in acceptable condition as defined by the latest American Traffic Safety Services Association (ATSSA) "Quality Standards for Work Zone Traffic Control Devices." Devices in unacceptable or marginal condition as determined above shall be removed from the job site and replaced with devices in acceptable condition.

The Contractor will be advised by the Engineer as to which road signs are to remain in use during construction and shall make necessary relocations to avoid interference with construction operations. Signs that are to be removed from the site during construction will be picked up, stored, and re-installed by the City. The Contractor will be required to pay the cost of replacing or repairing any signs damaged by reason of his operations or lost while in his custody, and upon his failing to pay such costs, they will be deducted and retained from any sums due under the Contract.

241.7 Method of Measurement. Maintenance of Traffic will be measured per each device per day listed in the proposal and as adjusted by the Engineer during construction. The device must be set for at least one-half of a calendar day for it to be measured for payment.

241.8 Basis of Payment. Maintenance of Traffic will be paid for by one of the following:

Item No. 241.1. Contract unit bid price.
Item No. 241.2. Contract lump sum bid price.

SECTION 242

PAVEMENT MARKINGS

242.1. Summary. This section governs the furnishing of labor, equipment, and materials and for the performance of work necessary to furnish and install white and yellow permanent or temporary retro–reflectorized pavement marking materials.

242.2. General. The permanent pavement markings shall be installed immediately after the roadway surface is complete unless prior approval is received by the Engineer. The installation of the yellow markings (as required) is the first priority. If the permanent markings cannot be installed and thus the roadway would be unmarked overnight, temporary removable markings shall be installed and remain until the permanent markings can be installed. The Contractor shall make every possible effort to remove the temporary pavement markings and install permanent pavement markings within 48 hours. Only under extreme circumstances and at the approval of the Engineer, will the duration of the temporary pavement markings be extended. Under no circumstance should the temporary pavement markings be in place for more than 2 weeks. If permanent markings cannot be installed within the specified time then semi–permanent markings shall be installed following the guide lines as set forth in the latest edition of the Manual on Uniform Traffic Control Devices (MUTCD) Part VI, Sections F6 and G6. The temporary removable markings shall be removed prior to installation of the permanent markings. In situations where markings conflict with the traffic routing, such as a lane closure or a lane diversion, conflicting markings shall be removed prior to application of the next set of markings.

242.3. Striping Applicability Chart.

Roadway Surface	**Permanent Marking**	**Temporary Marking**
New asphalt	Thermoplastic	Temporary Tape (I or II)
Old asphalt	Aggressive bond thermoplastic	Temporary Tape (I or II)
Slurry or microsurface	Thermoplastic	Temporary Tape (I or II)
Milled concrete or asphalt	Not applicable	Paint
Asphalt to be milled	Not applicable	Paint
Base asphalt	Not applicable	Paint, Temporary Tape (Type II)
New or old concrete	Aggressive bond thermo, Epoxy	Paint
Diamond ground	Epoxy	Paint

Note: Old asphalt is asphalt which is more than 6 months old, or which has been open to traffic.

242.4. Symbol Applicability Charts.

Roadway Surface	Symbols	Temporary Symbols
New asphalt	Pre-formed thermoplastic, thermoplastic	Temporary Tape (I or II), paint
Old asphalt	Pre-formed thermoplastic thermoplastic	Temporary Tape (I or II), paint
Slurry or microsurface	Thermoplastic	Temporary Tape (I or II), paint
Milled concrete or asphalt	Not applicable	Paint
Asphalt to be milled	Not applicable	Paint
Base asphalt	Not applicable	Paint
New or old concrete	Aggressive bond thermo, inlaid cold plastic	Temporary Tape (I or II), paint
Diamond ground concrete	Inlaid cold plastic	Temporary Tape (I or II),paint

242.5. Materials

a. Pre–Mix Glass Spheres. Pre–mix glass spheres shall be uncoated and conform to AASHTO M247 Type 1. The glass spheres used in the formulation shall be lustrous, free from film, scratches, and pits. The glass spheres shall also meet the following requirements:

1. Roundness. The roundness of the spheres shall be minimum of 70% when tested in accordance with ASTM D1155.

2. Gradation. The gradation when tested in accordance with the method provided in ASTM D1214 shall be:

Size of Sieve	% Passing (by weight)
No. 18	80-100
No. 50	20-50
No. 80	0-10

3. Refractive Index. When tested by a liquid immersion method at 77°F, the refractive index of the spheres shall be a minimum of 1.50.

b. Drop–On Glass Spheres. The spheres shall be manufactured from glass of a composition designed to be highly resistant to traffic wear and to the effects of weathering. The particles shall be spherical in shape, containing not more than thirty percent (30%) of irregularly shaped particles. They shall be essentially free of sharp angular particles, and particles showing milkiness or surface scoring or scratching. They shall meet the requirements of AASHTO M247 Type 1.

1. Gradation. The gradation when tested in accordance with the method provided in ASTM D1214 shall be:

Size of Sieve	% Passing (by Weight)
No. 20	100
No. 30	80-100
No. 50	18-35
No. 80	0-10
No. 100	0-2

2. Refractive Index. When tested by a liquid immersion method at 77°F, the refractive index of the spheres shall be within the range of 1.50 to 1.60.

3. Moisture Proof Requirements. The spheres shall show no tendency to absorb moisture in storage and shall remain free of clusters and hard lumps. The spheres shall flow freely from dispensing equipment at any time when surface and atmospheric conditions are satisfactory for application.

c. Thermoplastic Pavement Markings. This specification covers a white and yellow thermoplastic reflectorized pavement marking material of a type that is applied to asphalt road surfaces in a molten state by mechanical means to receive a surface application of glass spheres, and which upon cooling to normal pavement temperature, produces an adherent reflectorized stripe of specified thickness and width and is capable of resisting deformation.

1. Characteristics. The material shall not exude fumes that are toxic, obnoxious or injurious to person or property, when it is heated to the temperature range specified by the manufacturer for application. It shall remain stable when held for 4 hours at this temperature, or when subject to 3 reheatings after cooling to ambient temperature. The temperature–viscosity characteristics of the plastic material shall remain constant throughout repeated reheatings, and shall show like characteristics from batch to batch. There shall be no obvious change in color of the material either as a result of repeated reheatings or from batch to batch. The thermoplastic material shall easily extrude from the equipment to produce a cross–section of line 90 to 125 mil thick, which shall be continuous and uniform in shape, and have clear and sharp dimensions.

2. Serviceability. The compound shall resist deterioration by contact with sodium chloride, calcium chloride or other chemicals used to prevent roadway ice, or because of the oil content of pavement materials or from oil droppings or other effects of traffic. The markings shall remain intact under normal traffic conditions at temperatures below 140°F.

3. Specific Gravity. The material's specific gravity shall not be less than 1.8 nor exceed 2.3 referred to water at 77°F when determined by a water displacement method at 77°F.

4. Set Time. When applied at the specified temperature and thickness, the material shall set to bear traffic in not more than 2 minutes when the air temperature is 50°F and not more than 10 minutes when the air temperature is 90°F.

5. Composition. The thermoplastic pavement marking material shall be homogeneously composed of pigment, filler, resin binder and glass reflectorizing spheres. The solid resin shall be a "maleic–modified glycerol ester resin" (alkyd binder) comprising at least one–third of the binder compositions and be no less than eight (8) percent by weight of the entire material formulation. The alkyd binder shall consist of a mixture of synthetic resins (at least one of which is solid at room temperature), and high boiling point plasticizers. The material shall not contain any petroleum derived ingredients. Yellow pigment shall be heat stabilized encapsulated lead chromate. The thermoplastic pavement marking material shall contain the following ingredients:

	Percent by Weight	
Ingredient	**White**	**Yellow**
Binder (See Note A below)	18.0 min	18.0 min
Titanium Dioxide	10.0 min	
Glass Spheres	20-50	20-50
Lead Chromate		2.0-4.5
Inert Fillers	42 max	50 max

The material shall be thoroughly mixed and furnished in a free flowing granular form. The material shall meet the requirements of this specification for a period of one year. The material shall readily melt in a uniform mixture. The material shall be free from all skins, dirt, and foreign objects. It shall be of such composition that it will not bleed, stain or discolor when applied to bituminous pavement. The manufacturer shall replace material not meeting the above requirements.

6. Color. The color of the thermoplastic material after heating for 4 hours ± 5 minutes at 425 ± 3°F shall conform to the following when tested by Federal Test Method Standard 141 Method 4252:

White: Federal Color Chip No. 37875 (Fed. Std. No. 595)
Yellow: Federal Color Chip No. 13538 (Fed. Std. No. 595)

7. Reflectance. The daylight luminous reflectance of the white material shall be not less than 75% when tested according to ASTM E1347. The yellow shall have a minimum brightness of 45% relative to magnesium oxide, and shall be within the green and red tolerance of the "Standard Color Chips for Highway Signs (January 1939)" obtainable from the United States Bureau of Public Roads, Washington, D.C. (TT–P–115a).

8. Softening Point. After heating the thermoplastic material for 4 hours ± 5 minutes at 425 ± 3°F and testing in accordance with ASTM D36, the material shall have a softening point 215 ± 15°F.

9. Flowability. After heating the thermoplastic material for 4 hours ± 5 minutes at 425 ± 3°F and testing for flowability, the white thermoplastic shall have a maximum percent residue of 18 percent and the yellow thermoplastic shall have a maximum residue of 21 percent.

After heating the thermoplastic material for 8.5 hours ± 5 minutes at 425 ± 3°F and testing for flowability, the thermoplastic shall have a maximum percent residue of 28 percent.

10. Indentation Resistance. Hardness shall be measured by a Shore Durometer, Type A2, as described in ASTM D2240, except that the Durometer and the panel shall be at 77°F, and a 4.4 lb load applied. After 15 seconds, the reading shall be not less than 55.

11. Abrasion Resistance. The material shall not show a maximum loss of 0.02 ounces subjected to 200 revolutions on a Taber Abraser at 77°F, using H–22 calibrate wheels, weighted to 17.6 ounces. The wearing surface should be kept wet with distilled water throughout the test. The panel for this test shall be prepared by forming a representative lot of material at a thickness of 125 mil on a 4 inch square panel (thickness 0.050 ± 0.001 inch) on which a suitable primer has been previously applied.

12. Low Temperature Impact Resistance. The materials shall not fracture when subjected to an impact of 64 inch pounds at –4°F for at least 3 hours. The panel is then placed in an instrument also maintained at –4°F, consisting of a 10.5 pound freely falling weight controlled to drop vertically for 6 inches onto the surface of the panel, which it strikes with a hemispherical indentor having a radius of 0.28 inches.

13. Water Absorption. Materials shall have a maximum of 0.5 percent by weight of retained water when tested by ASTM D570, procedure (A).

14. Yellowness Index. The white thermoplastic material shall not exceed a yellowness index of 0.15.

15. Flash Point. The thermoplastic material shall have a flash point not less than 475°F when tested in accordance with ASTM D92.

16. Cracking Resistance. After heating the thermoplastic material for 4 hours ± 5 minutes at 425 ± 3°F; applying to concrete blocks, and cooling 15 ± 3°F, the material shall show no cracks. Properly applied, the material shall show less than six stress cracks per ten lineal feet of markings independent of pavement fracturing and faulting, for at least six months.

d. Aggressive Bond Thermoplastic Pavement Markings. This specification covers a white and yellow adhesive thermoplastic reflectorized pavement marking material that is applied to road surfaces, including Portland Cement Concrete (PCC) and aged asphalt without need of a primer/sealer. The material is applied to the road surface in a molten state by mechanical means with surface application of glass beads. Upon cooling to normal pavement temperature, it produces an adherent reflectorized stripe of specified thickness and width with limited thermal/seasonal deformation. In order to qualify as a non–sealer thermoplastic that can be applied to concrete surfaces without a sealer, the material must meet or exceed the requirements listed below.

1. Characteristics. The thermoplastic material shall be homogeneously composed of pigments, resins, polymers (adhesive constituent), glass reflectorizing spheres and other fillers.

The thermoplastic material shall be available in a variety of surface delineation colors from the same manufacturer. The manufacturer shall have the option of formulating the material according to their own specifications. However, certain physical and chemical requirements specified must be satisfied in order to qualify as a non–primed striping application for PCC and aged asphalt surfaces.

The material shall not exude fumes which are toxic, or injurious to persons or properties upon heating to application temperature.

2. Specific Gravity. The specific gravity of the white and yellow thermoplastic pavement marking material shall not exceed 2.15.

3. Composition. The pigment, intermix reflectorizing spheres, and fillers shall be uniformly dispersed in the resin and polymer upon heating to application temperature. The material shall be free of dirt and foreign matter and must meet or exceed the compositional requirements (percentage by weight) indicated below. The total resin/binder content must be 22% min – 26% max (weight) of total product ingredients.

Test Component	White	Yellow (Lead Chromate)	Yellow (Heavy Metal Free)
Glass Beads	30% min	30% min	30% min
Pigment- Ti02	10% min	N/A	N/A
Yellow (PbCr03)	N/A	2% min	N/A
Organic Yellow	N/A	N/A	Federal Color
Resin/Binder Content	22% min	22% min	22% min
Inert Fillers	42.0 max	50.0 max	At manufacturer's discretion

4. Color. The thermoplastic material after heating for four hours ±5 min. at 425 ±3°F and cooled to 77 ±3°F shall meet the following:

White: Daylight reflectance at 45 degrees – 0 degrees – 80% min.
Yellow: Daylight reflectance at 45 degrees – 0 degrees – 45% min.

Yellow color shall match Federal Test Standard Number 5958 – Color 13538 and lie within the following ranges:

X	0.485-0.510
Y	0.445-0.470

The chromaticities and luminance factors of ordinary colors of retroreflecting material shall be determined under an angle of illumination of 45 degrees; direction of view perpendicular to surface; and illumination CIE standard illuminant D65.

5. Bond Strength. After heating the thermoplastic material for four hours ±5 minutes at 425 ±3°F, the bond strength to Portland Cement Concrete (PCC) shall equal or exceed 275 psi (ASTM D4796 or ASTM C321). Failures of type described in Section 6.1 of ASTM D4796 bond test, must be repeated to obtain a quantifiable number. Failure of types 6.2, 6.3, and 6.4 of ASTM D4796 bond test, must exceed the specified thermoplastic – cement brick separation.

6. Low Temperatures Cracking (Stress) Resistance for Extended Period. The material shall be tested according to AASHTO T 250 Section 7 with Section 7.2.3. modified for an extended cold temperature of 15 ±3°F exposure period of 72 hours. Any cracking shall constitute failure of the material to qualify as a non–sealer aggressive bonding material for PCC road surfaces.

7. Impact Resistance (Gardner Falling Weight). Perform the testing procedure according to ASTM D5420 Section 11. Record and report the type of failure as (a) crack or cracks on the surface, (b) cracks that penetrate the entire thickness, (c) brittle shatter (the test specimen in several pieces after impact), or (d) ductile failure (the specimen is penetrated by a blunt tear).

Both the yellow and white non–sealer materials shall have minimum impact resistance of 80 inch pounds with no visible surface cracks.

8. Impact Resistance (Notched Izod). After heating the material for four hours ±5 minutes at 425 ±3°F and forming test specimens according to AASHTO T 250 Section 8, both the yellow and white samples shall be a minimum notched impact resistance of 11.0 ±0.3 inch pounds. The specimens shall be tested both at room temperature 73.4 ±3°F and low temperature of 15 ±3°F in accordance with ASTM D256 test method A.

9. Oil and Grease Resistance. The thermoplastic material shall show no signs of deterioration or solubility after motor oil is rubbed vigorously into a sample for 2 minutes and allowed to penetrate for 5 minutes.

10. Set Time. When applied at a temperature range of 412.5 ±12.5°F and thickness of 90 to 125 mil the material shall set to bear traffic in not more than 2

minutes when the air temperature is 50 ±3°F and not more than ten minutes when the air temperature is 90 ±3°F.

11. Flash Point. The thermoplastic material shall have a flash point of not less than 500°F when tested in accordance with ASTM D92 .

12. Storage Life. The material shall maintain the requirements of this specification for a minimum period of one year. The thermoplastic material must melt uniformly with no evidence of skins or unmelted particles for this one year time period. Any material failing to do so shall be replaced by the manufacturer at their expense.

13. Packaging and Marking. The thermoplastic material shall be packaged in suitable containers to which it will not adhere during shipment and storage. The container of thermoplastic material shall weigh approximately 50 lb. Each container shall designate user information, manufacturer's name and address, batch number and date of manufacture. Each batch manufactured shall have its own separate number. The label shall carry appropriate user warnings and instructions.

14. NTPEP Test Program. The material must have been applied, without surface primer, on two NTPEP Decks (PCC) and evaluated for a period of at least one year. A minimum of 90% of the original pavement striping must be intact on the PCC decks after a one–year review period. The percent retention is calculated based on the measured test area square footage (square meter) (neglecting mil thickness wear down) minus the road surface areas that are exposed due to cracking and chipping away of thermoplastic from the concrete surface caused by product bond failure to the substrate.

e. Preformed Thermoplastic Pavement Markings. This specification is for the furnishing of retroreflective preformed thermoplastic pavement marking materials that can be adhered to asphalt, concrete and Portland cement concrete pavements by means of heat fusion. The applied markings shall be very durable, oil and grease impervious and provide immediate and continuing retroreflectivity.

1. Characteristics. The preformed marking material shall consist of a resilient white and yellow polymer thermoplastic with uniformly distributed glass beads throughout its entire cross section.

Preformed words and symbols shall conform to the applicable shapes and sizes as prescribed in the latest revision of the Manual on Uniform Traffic Control Devices.

The preformed markings shall be fusible to asphalt concrete and Portland cement concrete pavements by means of the normal heat of a propane type of torch. Adhesives, primers or sealers shall not be used prior to the preformed marking application on asphalt concrete and Portland cement concrete pavements.

The preformed markings shall conform to pavement contours, breaks and faults through the action of traffic at normal pavement temperatures. The markings shall have resealing characteristics and be capable of fusing to itself and previously applied worn hydrocarbon and/or alkyd thermoplastic pavement markings.

The preformed markings shall be capable of application on new, dense and open graded asphalt concrete wearing courses during the paving operation in accordance with the manufacturer's instructions. After application, the markings shall be immediately ready for traffic. The preformed markings shall be suitable for use for one year after the date of receipt when stored in accordance with the manufacturer's recommendations.

The preformed markings shall be capable of application on new, dense and open graded asphalt concrete wearing courses during the paving operation in accordance with the manufacturer's instructions. After application, the markings shall be immediately ready for traffic. The preformed markings shall be suitable for use for one year after the date of receipt when stored in accordance with the manufacturer's recommendations.

The preformed thermoplastic markings shall not be brittle and must be sufficiently cohesive and flexible at temperatures exceeding 50°F for one person to carry without the danger of fracturing the material prior to application.

2. Composition. The retroreflective pliant polymer thermoplastic pavement markings shall consist of a homogeneous mixture of high quality polymeric thermoplastic binders, pigments, fillers and glass beads. The thermoplastic material must conform to AASHTO designation M 249 with the exception of the relevant differences due to the material being supplied in a preformed state.

3. Glass Beads. The markings shall contain 30% glass spheres which shall conform to AASHTO M 247 Type 1, except that glass spheres shall have a minimum of 70% true spheres on each sieve and 80% true spheres overall. The glass beads must be homogeneously blended throughout the material with a securely bonded protruding exposed layer of beads that provide immediate and continuous retroreflectivity; no additional glass beads shall be dropped on the material during application. Curved arrows must be available without protruding glass beads if reversibility is needed.

4. Retroreflectivity. The preformed marking shall upon application exhibit uniform adequate nighttime retroreflectivity. At 86 degree 30 minutes incidence angle and 1 degree 30 minutes divergence angle, the markings shall have average minimum intensities of 350 millicandelas for white and 175 millicandelas for yellow as measured with a Mirolux retroreflectometer. Using a Taber Abraser with an H–18 wheel and a 4.4 ounce load, the sample shall be inspected at 200 cycles, under a microscope, to observe the extent and type of bead failure. No more that 15% of the beads shall be lost due to popout and the predominant mode of failure shall be "wear down" of the beads.

5. Color Characteristics. The thermoplastic material without glass beads shall meet the following:

White: Daylight reflectance at 45–degree/ 0 degree of 80% minimum
Yellow: Daylight reflectance at 45–degree/ 0 degree of 45% minimum.

The daylight reflectance shall not change significantly when the preformed thermoplastic is properly applied to the roadway surface. For highway use, the white markings shall contain a minimum of 8% by weight of Titanium Dioxide pigment to ensure a color similar to Federal Highway White, Color No. 17886 Standard 595. Yellow color shall reasonably match color chip Number 13538 of Federal Standard number 595 and be lead free.

6. Skid Resistance. The surface of the preformed thermoplastic markings shall provide a minimum skid resistance value of 45 BPN when tested according to ASTM E303.

7. Thickness. The width of the supplied material shall have a minimum average thickness of 90 mils.

8. Flexibility. The preformed thermoplastic marking material shall have flexibility at 50°F such that no cracking occurs in the test sample when a 1 inch by 6 inches sample is bent through an arc of 90 degrees at a uniform rate in 10 seconds (9 seconds per degree) over a one inch mandrel. The sample must be conditioned prior to testing at 50 ± 2°F for a minimum of four hours. At least two specimens tested must meet the flexibility requirements at 50°F for a passing result.

9. Environmental Resistance. The applied markings shall be resistant to deterioration due to exposure to sunlight, water, oil, diesel fuels, gasoline, pavement oil content, salt and adverse weather conditions.

10. Effective Performance Life. When properly applied, in accordance with the manufacturer's instructions, the pavement markings shall be neat and durable. The markings shall remain retroreflective and show no fading, lifting, shrinkage, tearing, roll back or other signs of poor adhesion.

f. Cold Plastic Pavement Markings. This specification covers a white and yellow pre–formed cold plastic reflectorized pavement marking material of a type that is applied to a road surface by an inlaid, pre–coated pressure sensitive adhesive that produces an adherent reflectorized stripe of specified thickness and width and is capable of resisting deformation.

1. Characteristics. The material shall be manufactured without the use of lead–chromate pigments or other, similar, lead–containing chemicals. Glass beads shall be incorporated to provide immediate and continuing retroreflection.

Ceramic skid particles shall be bonded to the top layer to provide a skid–resistant surface.

Preformed word and symbol markings shall conform to the applicable shapes and sizes as outlined in the Manual on Uniform Traffic Control Devices. The preformed markings shall be capable of being adhered to pavements by an inlaid, pre–coated pressure sensitive adhesive. A surface preparation adhesive may be used to precondition the inlay pavement surface.

The preformed marking film shall mold itself to pavement contours by the action of traffic. Following proper inlay application and tamping, the markings shall be immediately ready for traffic.

2. Composition. The retroreflective pavement marking film shall consist of a mixture of high quality polymeric materials, pigments and glass beads distributed throughout its base cross sectional area. A reflective layer of glass beads and a layer of skid resistant ceramic particles shall be bonded to the top urethane wearing surface. The urethane wear surface shall have a nominal thickness of 0.005 inches. The film shall have a pre-coated, shear resistant, pressure sensitive adhesive.

3. Color. The daytime color of the white film shall provide a minimum initial luminance factor, Y, of 80 and shall conform to the following chromaticity requirements:

White		Yellow	
X Values	Y Values	X Values	Y Values
0.290	0.315	0.474	0.455
0.310	0.295	0.491	0.435
0.330	0.360	0.512	0.486
0.350	0.340	0.536	0.463

The daytime color of the yellow film shall provide an initial luminance factor, Y, in a range of 36 to 59 and shall conform to the above chromaticity requirements:

Measurements shall be made in accordance with ASTM E1349, using illuminant "C" and 0/45 (45/0) geometry. Calculations shall be in accordance with ASTM E308 for the 2–degree observer.

4. Reflectance. The white and yellow films shall have the following initial minimum reflectance values as measured in accordance with the testing procedures of ASTM D4061. The photometric quantity to be measured shall be coefficient of retroreflected luminance (RL) and shall be expressed as millicandelas per square foot per foot–candle.

	White			Yellow		
Entrance Angle	86.0°	86.0°	86.5°	86.0°	86.0°	86.5°
Observation Angle	0.2°	0.5°	1.0°	0.2°	0.5°	1.0°
Retroreflected Luminance R_L (mcd–ft–2–fc–1)	700	500	400	410	250	175

5. Skid Resistance. The surface of the retroreflective films shall provide an initial minimum skid resistance value of 55 BPN as measured by the British Portable Skid Tester in accordance with ASTM E303.

The surface of the retroreflective film shall retain an average skid resistance value of 45 BPN, when tested in accordance with ASTM E303, for a period of one year when installed in non–snow removal areas. The 45 BPN minimum value shall be an average of several readings taken in both the wheel track and non–wheel track areas.

6. Tensile Strength and Elongation. The film shall have a minimum tensile strength of 150 lbs. per square inch of cross–section when measured in the direction of the length of the roll and tested in accordance to ASTM D638, except that a sample 6 inch x 1 inch shall be tested at a temperature between 70°F and 80°F using a jaw speed of 10 to 12 inches per minute. The sample shall have a maximum elongation of 50% at break when tested by this method.

7. Reflectivity Retention. The glass beads must be strongly bonded and not be easily removed by traffic wear. Using a Taber Abraser with an H–18 wheel and a 4.4 ounce load, the sample shall be inspected at 200 cycles, under a microscope, to observe the extent and type of bead failure. No more that 15% of the beads shall be lost due to popout and the predominant mode of failure shall be "wear down" of the beads.

8. Glass Beads. The size, quality and refractive index of the glass beads shall be such that the performance requirements for the markings shall be met. The bead adhesion shall be such that beads are not easily removed when the material surface is scratched.

The film shall have glass bead retention qualities such that when a 2 inches by 6 inches sample is bent over a 1/2 inch diameter mandrel, with the 2 inch dimension perpendicular to the mandrel axis, microscopic examination of the area on the mandrel shall show no more than 10% of the beads with entrapment by the binder of less than 40%.

9. Thickness. The film, without adhesive, shall have a minimum thickness of 60 mil.

g. Lead–Free, Water–Borne Emulsion Based White and Yellow Traffic Paint. The pavement marking paint shall be a rapid dry. The traffic paint shall provide optimum adhesion for glass spheres when both binder and glass spheres are applied in the recommended quantities.

1. Drying Time. When applied at a wet film thickness of 15 mils with a top dressing of 6–10 pounds of glass spheres per gallon of paint and when the pavement temperature is between 50°F and 120°F and the relative humidity doesn't exceed 80%, the binder shall dry to a no–tracking condition in a minimum of 20 seconds and a maximum of 60 seconds. These dry times shall not be exceeded when the paint is applied with specialized equipment so as to have the pigmented binder at a temperature of 150°F to 170°F at the spray gun.

The no–tracking condition shall be determined by passing over the applied line in a simulated passing maneuver with a passenger car traveling 35 MPH. There shall be no visual deposition of the paint to the pavement surface when viewed from a distance of 50 feet. Furthermore, the pigmented binder, without glass spheres, shall dry to no–tracking condition in 180 seconds or less when tested in accordance with ASTM D711.

2. Directional Reflectance. The daylight directional reflectance of white pigmented binder (without glass spheres) shall be not less than 85% relative to magnesium oxide when tested in accordance with Federal Test Method Standard No. 141a, Method 6121. If yellow, after drying shall suitably match color 33538 of Federal Standard 595.

The paint for the pavement markings shall contain no lead and/or chromium and shall have volatile organic content conforming to the latest Environmental Protection Agency regulation.

The paint shall show no cracking, flaking, blistering, appreciable loss of adhesion, softening, coagulation, discoloration, and have a minimum bleeding ratio of 0.97 when tested in accordance with Federal Specification TT–P–1952B.

The paint shall be capable of dilution with water at all levels without curdling or precipitation such that the wet paint can be readily cleaned up with water only.

The minimum contrast ratio shall be 0.96 when drawing down with a 0.005 bird film applicator on a 2A Leneta Chart or equal and air–dried for 24 hours. Contrast Ratio = Black/White.

h. Temporary Tape. This specification covers pavement marking tape of two colors, white and yellow, and of two types, Type I and Type II:

Type I–Regular (This type is not required to be easily removable intact.)

Type II–Removable (This type is to be readily removable intact, either manually or with a roll–up device after having been in place through the construction season.)

1. General. This material shall be a pavement striping tape designed to provide reflective delineation under both dry and moderate rainfall conditions. The tape shall consist of glass spheres tightly embedded to a binder; on a conformable backing pre-coated with a pressure sensitive adhesive. The striping material shall be thin, flexible, formable and following application shall remain conformed to the texture of the pavement surface. The tape shall be furnished in the color and type designated on the Plans or in the Contract. The markings shall be pre-coated with a pressure sensitive adhesive and shall be capable of being adhered to asphalt concrete or Portland cement concrete in accordance with manufacturer's instructions without the use of heat, solvents or other additional adhesive means, and shall be immediately ready for traffic after application. The adhesive shall not require a liner or release paper. The striping material shall have a uniform appearance, free from cracks and the edges shall be true, straight and unbroken. The material shall be weather resistant and show no appreciable fading, lifting or shrinkage when applied in accordance with the manufacturer's recommendations.

2. Color and Daylight Reflectance. The daylight reflectance (ASTM E1347) of white shall be not less than 70%. The color of yellow shall be within the red and green tolerance limits of the Highway Yellow Color Tolerance Chart issued by the U.S. Department of Transportation.

3. Dimensions. The width and length shall be as shown on the Plans or in the Contract. The material shall be available in rolls and there shall be no more than three splices per 50 yards of length.

4. Packaging. The material shall be packaged in accordance with accepted commercial standards and when stored under normal conditions, shall be suitable for use for a period of at least one year after purchase.

5. Adhesion. The material shall adhere to asphalt and concrete surfaces when applied according to manufacturer's recommendations at surface temperatures above 50°F and shall be immediately ready for traffic following application.

6. Removability. Type II tape shall be removable from asphalt and Portland cement concrete intact or in large pieces, either manually or with a roll–up device, at temperatures above 40°F without use of heat, solvents, grinding or blasting.

7. Reflection. The white and yellow material shall be retroreflective, reflecting white or yellow respectively and shall be readily visible at night when viewed with automobile headlamps using high beams from a distance of at least 300 feet.

8. Durability. Type II material shall maintain adhesion, show no alligatoring, show no signs of pulling apart, and shall suffer no more than a 25% loss of beads, sand and grit when subjected to 30,000 revolutions on a small–wheel circular track as described in ASTM E660, with the following variations or exceptions:

i. Two opposite wheels mounted with Goodyear 3.40–5 NHS Industrial Rib tires shall be used with a total load of 51.5 pounds on each tire. Tire air pressure shall be maintained at 25 psi. The wheels shall be mounted perpendicular to the specimens and toed out 2° to produce a slight abrading action.

ii. Specimens shall be applied to 6 inch diameter dense graded bituminous concrete surface which has been compacted at 3000 psi for two minutes. After application, the specimens shall be allowed to cure at least 16 hours before beginning the test.

i. Epoxy. This specification is for the application of epoxy resin and glass beads as reflective pavement markings on Portland cement concrete or bituminous pavements. The epoxy resin material shall be toxic heavy metal free, two–component, 100% solids, and shall be formulated and tested to perform as a pavement marking material with glass spheres applied to the surface. The two components are an epoxy resin and an amine curing agent. The Contractor shall provide complete manufacturer's specifications and material safety data sheets to the Engineer for all material furnished.

1. Characteristics. The material shall not exude toxic fumes when heated to application temperature. The material which, when mixed in the proper ratio and applied at 14 mil wet film thickness at 74.8°F with the proper saturation of glass beads, has a no–tracking time of less than 40 minutes for slow curing material and less than 10 minutes for rapid curing material. The material shall be capable of fully curing under a constant surface temperature of 32°F or above.

2. Properties of Cured Material.

i. Color. Provide white which complies with Federal Standard 595 17875. Provide yellow which matches the standard shade within the red and green tolerance limits when compared with the Highway Yellow Color Tolerance chart available from the U.S. Department of Transportation (Federal Standard 595 13538).

ii. Abrasion Resistance. 0.0028 ounces maximum loss when tested at 30 ± 1.5 mils and a 72 hour cure and with a CS–17 wheel under a load of 2.2 lbs. for 1000 cycles.

iii. Hardness. Shore D hardness of 75 minimum.

iv. Adhesion to Concrete. When catalyzed, has such a high degree of adhesion to the specified concrete surface that there is a 100% concrete

failure. Apply the material at a film thickness of 15 ± 1.5 mils to concrete with a minimum compressive strength of 4,000 psi. Allow the material to cure for 72 hours at 77°F before the test is performed.

v. Yellowness Index. White only. Value after 72 hours in QUV – 30 maximum when tested at 15 ± 1.0 mils and a 72 hour cure.

vi. Field Evaluation. Field test materials at AASHTO NTPEP regional test facilities, which include both hot and cold weather conditions and are a minimum of six months in duration.

3. Glass Beads For Drop–On Application (double drop system):

i. For the first drop, furnish large beads, which are compatible with the epoxy system, and comply with AASHTO M 247 except with the following gradation (FP–96, Type 4):

Sieve Size	Percent Passing
No. 10	100
No. 12	95-100
No. 14	80-95
No. 16	10-40
No. 18	0-5
No. 20	0-2

ii. For the second drop, furnish regular beads which are specifically manufactured to be compatible with the epoxy system, and which comply with the requirements of AASHTO M247, Type 1.

iii. Both types of beads are to be coated with a moisture resistant coating and an adhesion promoting coating which is compatible with the epoxy system.

4. Test Methods.

a. Adhesion to Concrete ACI 503, Appendix A.1.

b. Hardness ASTM D2240.

c. Abrasion Resistance ASTM C501.

242.6. Method of Installation. The proposed permanent markings shall be laid out by the Contractor in advance of the marking installation. Markings shall not be applied until the layout and conditions of the surface have been approved by the Engineer. If a paint line is used for layout purposes (in lieu of a chalk line or string line) the paint line shall not be wider than 1/2 inch in width. If wider, the paint shall be removed following the application of the final permanent marking. New markings shall match existing markings as applicable in areas abutting

existing road surfaces. The surface shall be dry and all dust, debris, oil, grease, dirt, temporary markings and other foreign matter shall be removed from the road surface prior to the application of the permanent marking material.

The Contractor shall be responsible for keeping traffic off freshly applied markings until they have set sufficiently to bear traffic. Traffic control is the responsibility of the Contractor and shall conform to the MUTCD. Failure to comply with traffic control guidelines will result in the Pavement Marking Contractor being directed to stop operations and leave the site until proper and approved traffic control has arrived and put in place on site.

Temporary pavement markings shall be installed the same day that the existing pavement markings are damaged, removed or covered up prior to lane opening. Temporary pavement markings shall be installed using the same cycle length as the permanent markings and be at least 2 feet long. Double yellow markings shall be used for temporary centerline and single white markings shall be used for temporary lane lines on four lane roadways. Single yellow markings shall be used for temporary centerline on two lane roadways as directed by the Engineer.

Half–cycle lengths with a minimum of 2 foot stripe and 10 foot gap should be used on roadways with severe curvature.

a. Glass Spheres. The drop on glass beads shall be applied at a rate of eight to ten pounds per 100 square feet.

b. Thermoplastic Pavement Markings. Thermoplastic material shall readily apply to the pavement at temperatures of 400 – 425°F from approved equipment to produce an extruded line that shall be continuous and uniform in shape having clear and sharp dimensions. Application temperatures shall not exceed 450°F.

Thermoplastic may be used for cross walks and stop bars as specified under the conditions described herein. The thermoplastic markings shall be applied to the pavement surface in a molten state by mechanical means with surface application of glass spheres, and upon cooling to normal pavement temperature, produce an adherent retro–reflectorized stripe of specified thickness and width and capable of resisting deformation.

1. Equipment. The equipment used to install the thermoplastic shall be as follows:

i. A self–propelled machine is required in order to fulfill the timing needs of the marking installation for longitudinal lines.

ii. If thermoplastic is used for transverse lines, i.e., crosswalks and stop lines, a push cart shall be used according to the following requirements:

Only one pass with the thermoplastic pavement marking equipment shall be allowed in order to provide the required line width according to the plans. Multiple passes of narrower lines with overlaps to provide the required width shall not be allowed unless otherwise approved

by the inspector after review of a test strip installation. If approved, the Contractor shall be required to heat the seam with a torch and feather the overlapped material with a putty knife. Liquid thermoplastic shall not be used for word or symbol markings.

iii. Constructed to provide mixing and agitation of the materials. Conveying parts between the main material reservoir and the shaping die shall be constructed as to prevent accumulation and clogging.

iv. Constructed so that mixing and conveying parts up to and including the shaping die will maintain the materials at a temperature not less than 400 – 450°F. To assure that the material does not fall below the minimum temperature, the shaping die shall be heated by means of a gas–fired infrared heater or a heated, oil– jacketed system.

v. Constructed as to ensure continuous uniformity in the dimensions of the stripe. The applicator shall provide a means for cleanly cutting off square stripe ends and shall provide a method of applying "skip" lines. The equipment shall be constructed to be able to provide for varying die widths and to produce varying widths of traffic markings. The use of pans, aprons, or similar appliances with die overruns will not be permitted.

vi. All conditions apply as stated above for material temperatures, line definition and workmanship when a hand pushcart is used for cross walks. The Inspector will verify measurement.

vii. Equipped with a special kettle for melting and heating the material shall be provided. The kettle shall be equipped with a thermostat so that heating can be done by controlled heat transfer liquid rather than by direct flame so as to provide positive temperature control and prevent overheating of the material.

viii. Constructed for a nominal application of 90 – 125 mil thickness.

ix. The heater and applicator shall be so equipped and arranged as to meet the requirements of the National Board of Fire Underwriters of the National Fire Protection Association, of the state, and of the local authorities.

x. Equipped with an automatic glass bead dispenser attached to the striping machine in such a manner that the beads are dispensed almost instantaneously upon the installed line. The glass bead dispenser shall be equipped with an automatic cut–off control synchronized with the cut–off of the thermoplastic material.

xi. The equipment shall be arranged as to permit preheating of the pavement immediately prior to application of the thermoplastic material, if preheating is recommended by the thermoplastic manufacturer.

xii. The applicator shall be capable of containing a minimum of 1000 pounds of molten material (not applicable for hand–liner use).

xiii. The applicator shall be mobile and maneuverable to the extent that straight lines can be followed and normal curves can be made in a true arc.

xiv. The Contractor's striper shall be equipped with electrical foot counters. The counters shall individually tabulate the length of line applied by each gun whether solid or dashed. The Contractor shall determine the accuracy of the foot counters and establish an adjustment factor as required to determine the pay item quantities. The foot counters shall be periodically checked to assure accurate measurements. No thermoplastic shall be applied without the accurate operation of the foot counters. The Contractor shall provide the Engineer with a certified document on these calibrations.

2. Application Over Existing Markings.

i. Existing thermoplastic markings on asphalt road surfaces may be over laid with thermoplastic material providing that the existing markings (thermoplastic) are less than 30 mils thick, and are securely bonded to the substrate. If the thermoplastic is greater than 30 mils, or not securely bonded to the substrate, then it shall be ground to 30 mils, or removed completely if not securely bonded to the road.

ii. Existing solvent based paint on asphalt road surfaces may be over laid with thermoplastic provided that more than 75% of the road surface is exposed, and there is no more than a single coat of paint on the remaining unexposed area. If more than one layer of paint exists, the paint is not securely anchored to the substrate, or there is less than 75% of the road surface exposed, then the paint must be thoroughly removed.

iii. All existing polyester, epoxy, or other type pavement marking paints on asphalt or concrete road surfaces must be completely removed from all road surfaces prior to the installation of thermoplastic material.

3. Application Temperatures. To ensure optimum adhesion, the pavement and ambient air temperature shall be 50°F and rising. The thermoplastic material shall be applied in a melted state at a temperature of 400 – 425°F. The temperature of the material within the shaping dies shall be maintained at the manufacturer's recommendations for application temperatures, but in no case shall the temperature fall below 400°F or exceed 450°F.

Where manufacturer's application temperatures differ from those as specified, the manufacturer's temperatures shall apply upon approval of the Engineer.

4. Line Quality. The finished lines shall have well defined edges and be free of waviness. Pavement marking lines shall be straight or of uniform curvature and shall conform with the tangents, curves, and transitions as specified in the pavement marking standards and/or as directed by the Inspector.

5. Line Thickness. The minimum thickness of the lines as viewed from a lateral cross section shall be not less than 90 mil near the edges, or less than 125 mil at the center. Drop–on glass beads shall not be included in the measurement, or if so, then appropriate allowances shall be made for the added mil thickness. A device for gauging the installed material thickness shall be furnished to the Engineer as requested for use on the project. The gauge shall be easy to read and shall readily indicate excessive variations.

6. Clean Up. The Contractor shall be responsible for removing all pavement markings material spilled upon the roadway surface or adjoining area. The Contractor shall use methods acceptable to the Engineer for removing the spilled material.

7. Line Repair. Any pavement marking which is crossed by a vehicle and tracked shall be replaced and any subsequent marking made by the vehicle shall be removed by methods acceptable to the Engineer at no additional cost to the City.

c. Preformed Thermoplastic Pavement Markings. The markings shall be applied in accordance with the manufacturer's recommendations on clean and dry surfaces.

1. Asphalt. The materials shall be applied using the propane torch method recommended by the manufacturer. The material must be able to be applied at ambient and road temperatures down to 32°F without any preheating of the pavement to a specific temperature. The pavement shall be clean, dry and free of debris and oil or grease residue.

i. At temperatures below 50°F, the preformed thermoplastic pavement markings shall be kept as warm as possible to maintain flexibility.

ii. Remove pavement surface moisture by holding a propane torch approximately 6 inches above the section of asphalt using a continuous circular motion.

iii. Heat the pavement with the torch upon placing the material to a temperature of 200°F for 90 mil, and up to 300°F for 125 mil materials.

iv. Immediately after the road surface has been properly preheated, position the material with exposed bead side up and heat.

v. Position the torch approximately 12 inches over the marking so the flame is extended and heat is evenly applied moving the torch in a circular

motion across the marking. When the correct temperature of the marking has been reached, it will turn slightly darker or pale yellow if the material is white. Over heated or burned material shall be removed.

vi. After the entire material section has been heated and bonded to the pavement, re–heat the perimeter of the marking and the road surface to bond the edges.

vii. If installing reversible arrows, which do not contain a top coating of glass beads, the glass spheres shall be hand applied on the molten material.

viii. Feather the leading edge of the pavement marking with a putty knife or bevel with the torch. Leading edges are any edge that would be susceptible to snow plow blades approaching from the direction of normal travel.

ix. After cooling, use a putty knife to attempt to remove a portion of the material. The material shall not pry off without asphalt embedded to the underside.

2. Concrete. New concrete surfaces must be sandblasted to entirely remove curing compound. The same application procedure shall be used as described for asphalt pavements. However, a compatible primer sealer may be applied before application to assure proper adhesion.

3. Chip Seal Surfaces. The same application procedure shall be used as described for asphalt pavements. However, exposed aggregate should be removed where the preformed thermoplastic pavement marking is to be applied.

d. Cold Plastic Pavement Markings. The Contractor shall furnish and install white and yellow permanent retro–reflectorized cold preformed plastic pavement marking material at the location shown on the plans, in conformance with the details and material specifications included herein.

The cold plastic markings shall consist of a homogeneous, extruded, prefabricated material of specified thickness and width which shall contain reflective glass spheres uniformly distributed throughout the cross section, and shall be applied only to concrete pavement surfaces by means of an approved inlaid grinding process with pre–coated adhesive and pressure.

1. Contractor's Personnel. It is important that the Contractor's personnel be completely knowledgeable of all application requirements and procedures prior to product application. It is the responsibility of the Contractor to contact the supplier of the cold plastic material if questions regarding application procedures or conditions arise.

2. Procedure. This procedure explains how to apply tape to concrete surfaces only. Apply the tape according to manufacturer's instruction in conjunction with an approved inlaid grinding method.

3. Road Conditions. It is recommended that the tape be installed as soon as practical following tape manufacturer instructions.

i. Cold plastic pavement markings shall be inlaid by an approved grooving process into concrete pavement surfaces. Cold plastic will not be allowed on asphalt pavement surfaces whether inlaid into hot asphalt or existing asphalt surfaces. Grooving the pavement surface allows preformed pavement marking tape to better adhere by creating a fresh surface. Grooving also produces a lower profile marking by embedding the tape into the pavement surface, which helps protect the tape from snowplow damage.

ii. The cutting head shall consist of diamond tipped cutting blades "gang stacked" 0.25 inches to 0.50 inches wide. The spacers between each blade must be such that there is less than a 10 mil raise in the finished groove between the blades. Water–cooling the blades may be necessary for long line grooving.

iii. The groove width shall be equal to the tape width plus 1 inch ±1/8 inch. The depth of the groove shall be 75% of the tape thickness ± 15%. For series 420, 60 mil tapes, the groove shall be 45 mils ± 10 mils or 0.05 inch ± 0.01 inch. The bottom of the groove should have a smooth, flat surface. If a coarse tooth pattern is present, increase the number of blades and decrease the thickness of the spacers between the blades on the cutting head. If water–cooling is used, flush the groove immediately after grooving to clean the surface.

iv. Clean the surface of the road and the groove using a broom and/or high–pressure air blower. If either of these methods fail to clean the road surface, then high–pressure water wash shall be used. Road surface, including the surface of the groove must be dry and all dust, dirt, debris, oil, grease and foreign material removed before applying tape. If using water–cooling to groove, the groove must be completely dry prior to tape application.

4. Tape Application. If there is a crack in the pavement, or if the tape is to be applied over a bridge expansion joint, manhole or utility box, lay the tape over the crack joint or fitting, then cut the tape 1 inch away from the crack or joint on each side. Apply the required surface preparation adhesive and allow to dry completely (5–10 minutes at 70°F, but not over 30 minutes).

5. Tamping. Tamp the tape thoroughly with a tamping cart with a minimum 200 pound load, three times back and forth (six passes) over each part of the tape.

Start in the center of the marking and work out to the edges removing any trapped air.

6. Do not twist or turn the tamper cart on the tape.

7. Make six passes (three passes back and forth) over each part of the tape (tamping is very important).

8. Make sure all edges are firmly adhered.

9. Application Conditions.

i. Air temperature 60°F and rising.

ii. Surface temperature 70°F and rising.

iii. Overnight air temperature 40°F the night before tape application.

iv. Pavement surface must be clean and dry. No rainfall should occur within 24 hours prior to application.

v. Butt splices must be used; do not overlap tape ends.

vi. Traffic must be kept off of pavement surfaces coated with a surface preparation adhesive prior to tape application (follow manufacturer's instruction regarding the use of surface preparation adhesive).

10. Surface moisture. Cold preformed plastic tapes will not adhere if moisture is present. Therefore, road surfaces must be dry and above the minimum required temperature for application of all tapes. If rainfall occurs within 24 hours prior to application, a surface moisture test (plastic wrap or roofing paper method as approved by the Engineer) must be performed and approval obtained from the Engineer. The groove must be visibly dry for a minimum of two hours prior to application. A moisture test shall be completed after the two–hour drying time to ensure no presence of moisture.

e. Pavement Marking Paint. The Contractor shall furnish and install white and yellow retro–reflectorized pavement marking paint material at the location shown on the plans, in conformance with the details and material specifications included herein.

1. The wet thickness and dry thickness of the pavement marking paint shall not be less than 15 mils and 12 mils, respectively without glass beads.

2. Glass beads shall be applied uniformly over the entire length of line at the rate of 6 to 10 lbs. per gallon of paint.

3. The gun tip shall be oriented perpendicular to the centerline to ensure that the beginning and ends of all lines are perpendicular to the centerline and not skewed.

4. The equipment shall be maintained such that the needle can be fully closed when shut as to ensure square cut lines at the beginning and ends.

f. Epoxy Pavement Marking. The Contractor shall furnish and install white and yellow epoxy markings at the location shown on the plans, in conformance with the details and material specifications included herein.

1. Equipment.

i. Use equipment that is capable of spraying both yellow and white epoxy in the manufacturer's recommended proportions. Provide equipment that call place stripes on the left and right sides, and place two lines simultaneously with either line in a solid or intermittent pattern in yellow or white. All guns must be in full view of operators at all times. If words, symbols, crosswalks, cross-hatching and stop bars are to be of epoxy resin material, equip the truck with a hand spray wand for such application. Mount the equipment on a truck of sufficient size and stability, and with an adequate power source, to produce lines of uniform dimension and prevent application failure. Provide equipment with metering devices to register the accumulated volume dispensed for each material, each day. Additionally, provide individual pressure gauges, clearly visible to the operator, for each pump used.

ii. Provide equipment with two glass bead dispensers (double drop system) that uniformly distributes the glass beads to the surface of the epoxy pavement marking at a rate of at least 25 pounds per gallon. Glass beads may be applied by a pressure gun or controlled free fall.

2. Surface Preparation:

i. On existing pavements, remove the existing pavement markings. Remove the existing markings and prepare the surface according to the manufacturer's recommendations (for the type of markings being installed).

ii. On new Portland cement concrete pavement (PCCP), use shot blasting to remove curing compounds and laitance from the surfaces to which the pavement marking will be applied. Prepare the surfaces of new concrete bridge decks the same as new PCCP.

iii. On all pavements, thoroughly remove all dirt, grit, grease, grime, vegetable matter, residue of prior pavement marking application (including such adhesives or primers that may have been used in their

application), and any other foreign matter from the roadway surface prior to the application of epoxy pavement markings.

3. Alignment. All layout required in the construction of the pavement marking is the responsibility of the Contractor. Lay out the pavement marking as detailed on the Plans. When the Plans do not provide details, submit a layout plan (conforming to the requirements of the Manual on Uniform Traffic Control Devices (MUTCD)) for the pavement markings to the Engineer for approval. Normally locate longitudinal pavement marking stripes 2 inches from existing longitudinal joints. Provide adequate guide marks (approximately 2 inches by 6 inches at approximately 30 to 50 ft. intervals) for the application of the pavement markings.

4. Pavement Marking Application.

i. When no traffic is present, and for edgelines under any condition of traffic, a slower curing epoxy material (40 minutes) may be used. When the application is taking place under traffic, use a fast setting (10 minutes) epoxy material for center lines and skip lines.

ii. Apply the epoxy material closely behind the cleaning procedure.

iii. Provide the Project Engineer with a copy of the manufacturer's application instructions. Apply the epoxy pavement markings in accordance with the manufacturer's recommendations. In the absence of manufacturer's recommendations, apply the markings when the ambient and pavement surface temperatures are 50°F and rising. Cease pavement marking operations when the ambient or the pavement surface temperature drops to 50°F.

iv. Before mixing the components of the pavement marking material, heat the individual components to the temperature ranges recommended by the manufacturer of the material. Avoid exceeding the maximum recommended temperature at any time.

v. Apply the epoxy pavement marking material at a thickness of 20 mils ± 0.2 mils on asphalt and PCCP. Immediately apply the glass beads to the epoxy pavement marking at the rate of 25 pounds per gallon of epoxy, equally divided between the large and regular bead gradations. Apply the large beads on the first drop, and the regular beads on the second.

242.7. Method of Removal. Temporary pavement markings on milled surfaces scheduled to be overlaid do not have to be removed prior to performing the overlay. Permanent pavement markings installed on new asphalt surfaces shall be removed without structurally damaging the pavement or scarring the surface. The method of pavement marking tape removal shall be by a high pressure water blast method, a low pressure water and sand blast method, a

steel shot blast method, or burning method. Grinding or black paint covering shall not be allowed on new pavement surfaces.

242.8. Performance Measures

a. Thermoplastic and Aggressive Bond Thermoplastic Performance Measures.

1. Lack of Specified Thickness. The full unit price bid per foot shall be withheld if lack of thickness is found more than three (3) times per 1 mile, or project if less than 1 mile in length. Each line shall be checked a minimum of six (6) times per 1 mile, or project if less than 1 mile in length.

2. Lack of Specified Width. Payment shall be made with penalty being equal to 25% of the unit price bid per foot for each 1/4 inch of width lacking not to exceed 100% of the unit price bid per foot for the length of the line less than specified width. Penalty shall be imposed upon the first occurrence and every occurrence thereafter.

3. Lack of Specified Length/Cycle. Payment shall be made with penalty being equal to 25% of the unit price bid per foot for each 1 inch of length lacking or exceeding the specified length for broken lane line and/or broken center line not to exceed 100% of the unit price bid per foot for the length of the line less than specified length. Penalty shall be imposed upon the first occurrence and every occurrence thereafter.

4. Lack/Excess of Surface Beads or Improper Application. The full unit price bid per foot shall be withheld for each lineal foot of material with inappropriate application rate of the surface glass beads. The same penalty shall apply if the beads are not evenly disbursed across and along a line or if the beads imbed improperly. This penalty shall be imposed for each instance that the Contractor fails to take corrective action after one warning by the Engineer.

5. Bell Ends. The full unit price bid per foot shall be withheld for wide "bell" ends greater in length than 2 inches. This penalty shall be for the full 6 feet of a lane line or broken centerline or for no more than 6 feet of a long line.

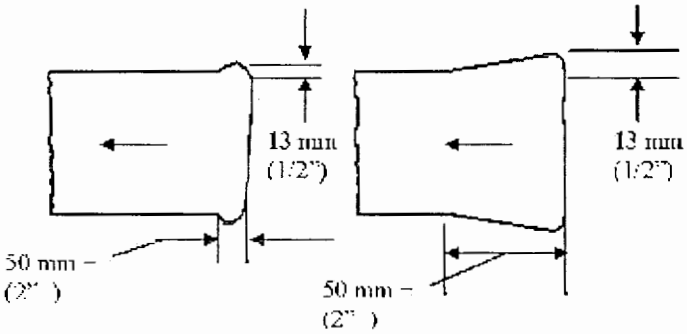

6. Lack of Adhesion. The full unit price bid per foot shall be withheld for 3 feet for each occurrence if found more than three (3) times per 1 mile, or project if less than 1 mile in length.

7. Line Deviation. A line that in the judgment of the Engineer deviates from the specified layout by an unreasonable amount shall be replaced. The Contractor shall be responsible for removal of the deviated marking material/repair of the pavement as designated by, and to the satisfaction of, the Engineer at no additional compensation.

8. Pitted Line. The full unit price bid per foot shall be withheld for each pit greater than 10 feet in length.

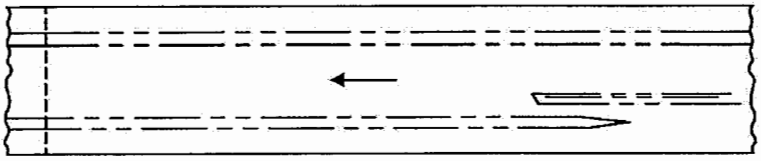

9. Gaps in Line or Crumbly Edges. The full unit price bid per foot shall be withheld for the entire length of the portion of any line receiving less than the required amount of thermoplastic material. This penalty shall be imposed when the Contractor fails to correct line quality after the first warning within 1 mile, or project if less than 1 mile in length.

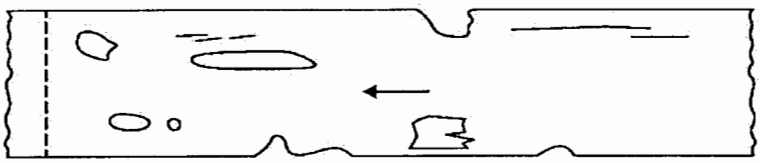

10. Rough Line Surface. The full unit price bid per foot shall be withheld for the entire length of the portion of any line with a rough or "burlap" surface. Penalty shall be imposed upon the first occurrence and every occurrence thereafter.

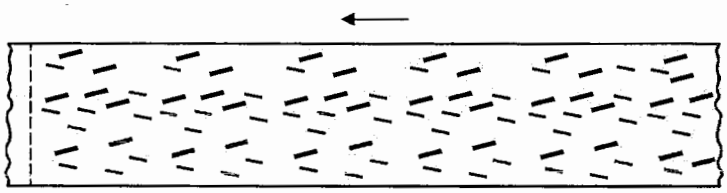

11. Excessive Dripping between Lines. The full unit price bid per foot shall be penalized for the length of any dribbled open space between broken lines that is not removed to the satisfaction of the Engineer before leaving the project site that work day. Penalty shall be imposed upon the first occurrence and every occurrence thereafter.

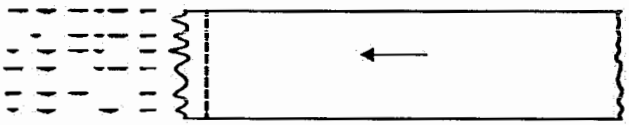

12. Swollen Line of Excessive Width. The full unit price bid per foot shall be penalized for swollen lines in excess of the specified width.

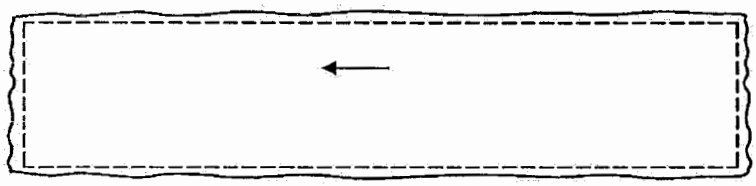

13. Smeared Line Edges. Fifty (50) percent of the unit price bid per foot shall be penalized for each occurrence of a length greater than 15 feet.

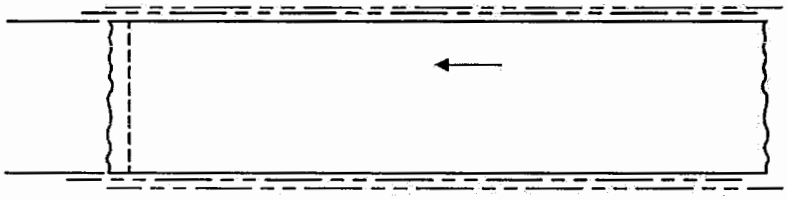

14. Wavy Line. The full unit price bid per foot shall be withheld for the entire length of waviness in a line caused by poor operation by the driver/operator of the application equipment. Penalty shall be imposed from the first occurrence.

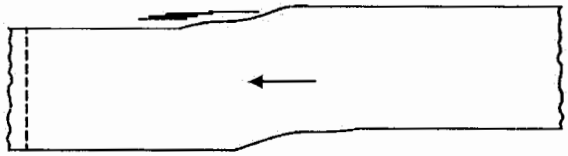

15. Work Outside the Scope/Limits of Project: Payment for all pavement marking work performed shall be withheld in full until the Contractor (a) removes all pavement marking material placed outside the scope/limits of the project, and

(b) repairs the pavement surface as directed by and to the satisfaction of the Engineer.

b. Preformed Thermoplastic Installation Performance Measures

1. Lack/Excess of Surface Beads or Improper Application. The full unit price bid per foot shall be withheld for each lineal foot of material or per each for symbol markings with inappropriate application rate of the surface glass beads. The same penalty shall apply if the beads are not evenly disbursed across and along a line or if the beads imbed improperly. This penalty shall be imposed for each instance that the Contractor fails to take corrective action after one warning by the Engineer.

2. Lack of Adhesion. The full unit price bid per foot or per each for symbol markings shall be withheld for 3 feet for each occurrence if found more than three (3) times per 1 mile, or project if less than 1 mile in length.

3. Line Deviation. A line that deviates from the specified layout by an unreasonable amount shall be replaced. The Contractor shall be responsible for removal of the deviated marking material/repair of the pavement as designated by, and to the satisfaction of, the Engineer at no additional compensation.

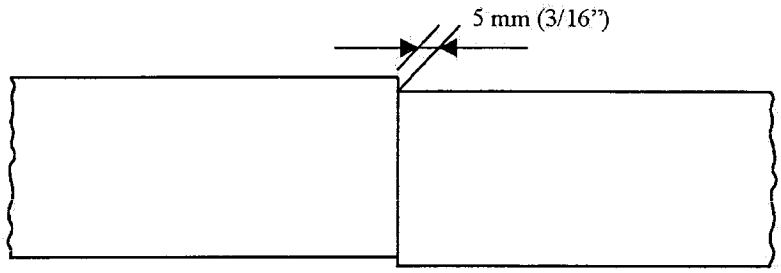

4. Wavy Line. The full unit price bid per foot shall be withheld for the entire length of waviness in a line caused by poor workmanship and/or application procedures. Penalty shall be imposed from the first occurrence.

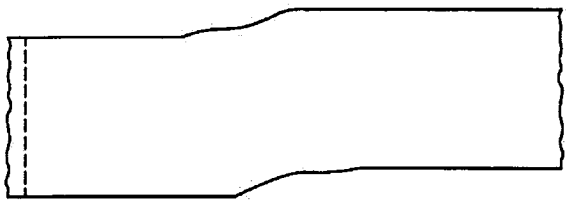

5. Gaps Between Successive Lines. Successively placed lines that contain gaps as specified by an unreasonable amount shall be replaced. The Contractor shall be responsible for removal of the deviated marking material/repair of the pavement as designated by, and to the satisfaction of, the Engineer at no additional compensation.

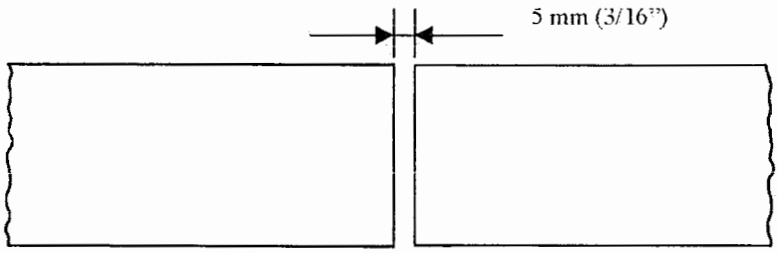

6. Burned or Discolored Markings. Fifty (50) percent of the full unit price bid per foot (meter) shall be withheld for each lineal foot of material or per each for symbol markings which shows signs of burning or discoloration due to prolonged application of the torch. This penalty shall be imposed for each instance that the Contractor fails to take corrective action after one warning by the Engineer.

7. Work Outside the Scope/Limits of Project. Payment for all pavement marking work performed shall be withheld in full until the Contractor (a) removes all pavement marking material placed outside the scope/limits of the project, and (b) repairs the pavement surface as directed by and to the satisfaction of the Engineer.

c. Cold Plastic Installation Performance Measures.

1. Lack of Adhesion. The full unit price bid per foot shall be withheld for 3 foot for each occurrence if found more than three (3) times per 1 mile, or project if less than 1 mile in length.

2. Line Deviation. A line that in the judgment of the Engineer deviates from the specified layout by an unreasonable amount shall be replaced. The Contractor shall be responsible for removal of the deviated marking material/repair of the pavement as designated by, and to the satisfaction of, the Engineer at no additional compensation.

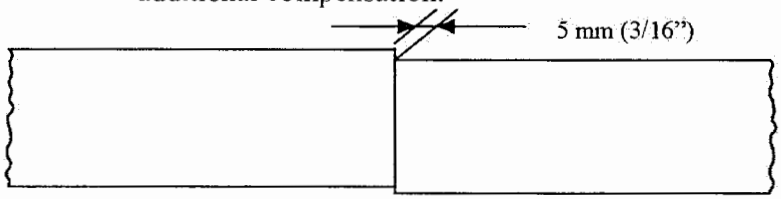

3. Gaps Between Successive Lines. Successively placed lines that contain gaps as specified by an unreasonable amount shall be replaced. The Contractor shall be responsible for removal of the deviated marking material/repair of the pavement as designated by, and to the satisfaction of, the Engineer at no additional compensation.

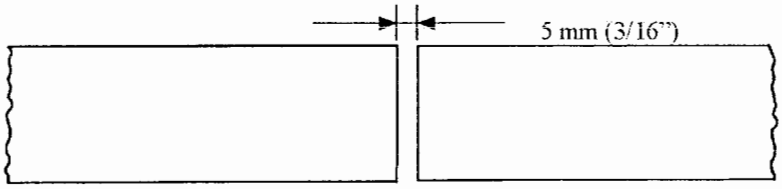

4. Inlaid Groove Quality. The full unit price bid per foot shall be withheld for the entire length of line that does not meet the requirements for depth of the inlaid material or for a groove that displays a coarse tooth pattern bottom that is not conducive to complete adhesion of the marking material. Penalty shall be imposed from the first occurrence.

5. Wavy or Misaligned Line. The full unit price bid per foot shall be withheld for the entire length of waviness caused by poor operation by the driver/operator of the grooving/installation equipment or for any misalignment in the material installed within the inlaid groove. Penalty shall be imposed from the first occurrence.

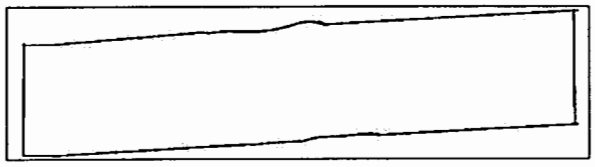

6. Work Outside the Scope/Limits of Project. Payment for all pavement marking work performed shall be withheld in full until the Contractor (a) removes all pavement marking material placed outside the scope/limits of the project, and (b) repairs the pavement surface as directed by and to the satisfaction of the Engineer.

d. Pavement Marking Paint and Epoxy Installation Performance Measures.

1. Lack of Specified Thickness. The full unit price bid per foot shall be withheld if lack of thickness is found more than three (3) times per 1 mile, or project if less than 1 mile in length. Each line shall be checked a minimum of six (6) times per 1 mile, or project if less than 1 mile in length.

2. Lack of Specified Width. Payment shall be made with penalty being equal to 25% of the unit price bid per foot for each 1/4 inch of width lacking not to exceed 100% of the unit price bid per foot for the length of the line less than specified width. Penalty shall be imposed upon the first occurrence and every occurrence thereafter.

3. Lack of Specified Length/Cycle. Payment shall be made with penalty being equal to 25% of the unit price bid per foot for each 1 inch of length lacking or exceeding the specified length for broken lane line and/or broken center line not to exceed 100% of the unit price bid per foot for the length of the line less

than specified length. Penalty shall be imposed upon the first occurrence and every occurrence thereafter.

4. Lack/Excess of Surface Beads or Improper Application. The full unit price bid per foot shall be withheld for each lineal foot of material with inappropriate application rate of the surface glass beads. The same penalty shall apply if the beads are not evenly disbursed across and along a line or if the beads imbed improperly. This penalty shall be imposed for each instance that the Contractor fails to take corrective action after one warning by the Engineer.

5. Pointed Ends. The full unit price bid per foot shall be withheld for pointed ends. This penalty shall be for the full 6 feet of a lane line or broken centerline or for no more than 6 feet of a long line.

6. Skewed Ends. The full unit price bid per foot shall be withheld for skewed ends. This penalty shall be for the full 6 feet of a lane line or broken centerline or for no more than 6 feet of a long line.

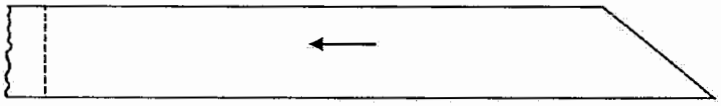

7. Line Deviation. A line that in the judgment of the Engineer deviates from the specified layout by an unreasonable amount shall be replaced. The Contractor shall be responsible for removal of the deviated marking material/repair of the pavement as designated by, and to the satisfaction of, the Engineer at no additional compensation.

8. Excessive Dripping between Lines. The full unit price bid per foot shall be penalized for the length of any dribbled open space between broken lines that is not removed to the satisfaction of the Engineer before leaving the project site that work day. Penalty shall be imposed upon the first occurrence and every occurrence thereafter.

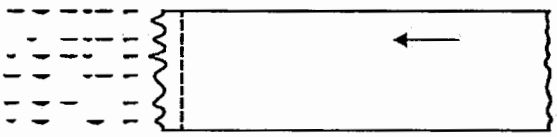

9. Wavy Line. The full unit price bid per foot shall be withheld for the entire length of waviness in a line caused by poor operation by the driver/operator of the application equipment. Penalty shall be imposed from the first occurrence.

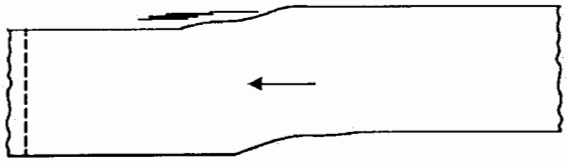

10. Non–Uniform Thickness. The line shall be uniform thickness across the entire cross section of the line with well–defined edges. Heavy inner thickness and thin edges or vice–versa will not be accepted. The full unit price bid per foot shall be withheld for lines that are not of uniform thickness. Penalty shall be imposed from the first occurrence.

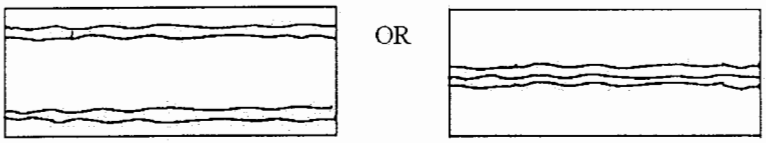

11. Work Outside the Scope/Limits of Project. Payment for all pavement marking work performed shall be withheld in full until the Contractor (a) removes all pavement marking material placed outside the scope/limits of the project, and (b) repairs the pavement surface as directed by and to the satisfaction of the Engineer.

242.9. Method of Measurement. Pavement Markings will be measured by one of the following:

a. Per linear foot of line. Skip lines are paid based upon length of marked section, 1 foot of a dual line is paid for at two unit feet bid.

b. Per each symbol.

242.10. Basis of Payment. Pavement Markings will be paid for by one of the following:

a. Contract unit bid price

b. Contract lump sum bid price

242.11. Measurement and Payments. This section governs the method of measurement and the basis of payment for furnishing all labor, equipment, tools, and materials and for the performance of all related work necessary to complete any construction covered in Section 242.

242.12. General. Unless specifically altered by the Special Provisions, the methods of measurement and payment shall be as specified in each section herein, and as listed in the Proposal.

242.13. Measurement. The Engineer will measure the work for payment. The method of measurement and computations used in determination of quantities of work performed will be those methods generally recognized as conforming to good engineering practice.

242.14. Items Not Listed in the Proposal. There shall be no measurement or separate payment for any item of work not specifically identified and listed in the Proposal and all costs pertaining thereto shall be included in the Contract unit prices for other items which are listed in the Proposal.

Item No. 242.1. Maintenance of Traffic, per device per day or lump sum.
Item No. 242.2. Striping - Temporary Tape, per lineal foot, or lump sum.
Item No. 242.3. Striping - Paint, per lineal foot, or lump sum.
Item No. 242.4. Striping - Epoxy, per lineal foot, or lump sum.
Item No. 242.5. Striping - Thermoplastic, per lineal foot, or lump sum.
Item No. 242.6. Striping – Aggressive Bond Thermoplastic, per lineal foot or lump sum.

SECTION 243

AUDIBLE PEDESTRIAN PUSH BUTTONS

243.1. General.

a. Audible Pedestrian Signal Push Button Station work shall include, but is not limited to, removal of improvements (if renovating existing station) and installation of push button and wiring as needed to make equipment operational. Removals shall include, but are not limited to, the existing push button detector, existing push button signs, and any ancillary wiring as necessary.

b. If renovation of existing push button stations, the existing push button detectors and existing push button signs shall be salvaged to the City

c. All work on the signals shall be completed so that the signals shall be operational during non-working hours.

243.2. Products and Materials.

Audible Pedestrian Signal Push Button Station (APS):

a. The APS pedestrian push button station (housing and sign frame) shall be Polara EZ Communicator Navigator 2 Wire Push Button Station (EN2 PBS) or approved equal and shall be yellow in color.

b. The APS unit shall be connected to a power and control unit mounted inside its associated pedestrian signal housing using a 2-wire cable.

c. The sign plate shall generally conform to the MUTCD Sign Code R10-3b, and shall have the street name in Braille.

d. The APS unit shall have special voice message capabilities.

e. The button itself shall have the following characteristics: made from cast aluminum and hard nickel plated; vandal resistant; ADA compliant; vibro-tactile with a raised directional arrow; and diameter of at least 2".

f. A red LED indication shall stay on until the walk cycle to indicate the push button has been activated by a pedestrian.

g. The station shall be provided with a weather-proof speaker for which all sounds and tones will emanate from, and the speaker shall be protected by a vandal resistant screen.

h. The button shall emit a brief "tick" each time the push button is operated. In addition, the station shall have the capability of emitting the following tone/sounds:

   1. Locating tone at 880 Hz plus harmonic, 0.1 second duration, 1 second interval during pedestrian clearance and don't walk interval.
   2. Cuckoo sound at 1250 Hz and 1000 Hz, 0.6 second duration, 1.8 second interval, during walk intervals only.

3. Chirp sound from 2700 Hz to 1700 Hz, 0.2 second duration, 1 second interval, during walk intervals only.

MPS Extension Bracket:

a. The APS unit shall use an extension bracket where specified and shall conform to the following criteria:
b. The extension bracket shall extend the push button no more than 18" and be yellow in color.
c. A mounting adapter plate shall be used where necessary to fasten the bracket securely to the pole.
d. The extension bracket plates and extension tubes shall be machined from 6061 T6 Al.
e. All mounting hardware shall be stainless steel.
f. MPS extension brackets shall be powder coated.

243.3 Programming. The various settings of the APS unit shall be programmable using a hand-held configurator. The programmable settings shall include, but is not limited to:

a. locator tone minimum and maximum volume
b. standard WALK minimum and maximum volume
c. extended push message minimum and maximum volume
d. volume over ambient
e. WALK mode, selecting the sound played during the WALK phase among the following 9 choices: none, cuckoo, chirp, standard message, custom message, cuckoo + standard, cuckoo + custom, chirp + standard, and chirp + custom
f. WALK sound pause
g. WALK sound trigger
h. clearance phase sound, selecting the sound played during the clearance phase among a few standard clearance sounds, a customer specified tone or verbal clearance countdown
i. DON'T WALK phase sound, selecting the sound played during the DON'T WALK phase among a few standard locate sounds or a customer specified tone.

The hand-held configurator shall be contractor furnished, City retained.

243.4 Customization. The APS unit shall provide the following custom message and sound options. Audible messages shall be fully customizable in multiple languages (up to three).

a. Custom Locate Sound – plays a sound at a selectable interval to assist a blind pedestrian in locating the push button station.

b. Custom Location Message – plays a custom message to state the street being crossed and cross street names, and other vital information to help pedestrian with location and direction.

c. Custom Walk Message – plays a custom message to alert pedestrians that the WALK interval has begun and name of street being crossed.

243.5 Maintenance and Warranty.

a. Functional responsibility for new traffic signal equipment installed will become the responsibility of the contractor until successful completion of a 15 day Acceptance Test Period. Contractor responsibility for operation and maintenance for newly installed signal material at the intersection begins from the first day of construction activity at the intersection, including modification of existing equipment due to construction activity, until Final Acceptance of the traffic signal.

b. The contractor shall provide manufacturer's warranties or guarantees on electrical, electronic, or mechanical equipment furnished, except city-supplied equipment and ensure that warranties and/or guarantees are consistent with those provided as customary trade and industry standard practices; or as otherwise specified in the plans, standard specifications, or special provisions. Upon final acceptance, transfer the manufacturer and contractor warranties or guarantees to the Engineer. The Contractor shall ensure that warranties are continuous and state that they are subject to transfer.

c. Acceptance or approval of the Work does not waiver warranties or guarantees where required by the specifications. Final acceptance will not be granted until all warranties and guarantees are received.

d. The Contractor shall repair and/or replace all equipment and material supplied which has been determined by the Engineer to not meet specifications. The Engineer reserves the sole right to determine suitability or unsuitability of the supplied equipment and material. The Contractor shall bear the total cost of delivery and transportation related to the repair and replacement of equipment and material unless otherwise approved by the Engineer.

243.6 Basis of Payment. No direct payment shall be made for all materials, equipment, labor, tools, and incidentals necessary to complete the work according to the plans and specifications. Payment for all work and materials under this section will be considered as completely covered by the Contract price per each. Payment will be made under:

Item No. 243.1 Audible pedestrian push button, per each

SECTION 244

COLORED IMPRINTED CONCRETE

244.1 General. The work shall consist of placement of decorative imprinted cast-in-place concrete slab, having integral color, with powder antique release agent, and imprinted with a pattern replicating that of a brick surface following a running bond pattern. The concrete system shall be constructed of an approved product system in compliance with the specifications of a Solomon product or approved equal. The work includes the following:

a. Set grades, prepare subgrades, construct forms, and place reinforcement.
b. Place colored concrete and finish.
c. Place powder antique release agent.
d. Imprint with running bond pattern.
e. Remove excess release agent.
f. Apply curing and sealing products.
g. Saw-cut joints.

The work shall be performed on the job site by trained and experienced workmen approved and licensed by the product manufacturer, and in accordance with the product manufacturer's specifications and recommendations.

244.2 Quality Assurance. All imprinted concrete shall be installed by a licensed product contractor. The imprinted concrete contractor shall provide a qualified foreman or supervisor who has a minimum of three years of experience with imprinted and textured concrete, and who has successfully completed at least five imprinted concrete installations of high quality and similar in scope to that specified herein. Evidence that the contractor is qualified to complete the project in a workmanlike manner as specified herein shall be submitted to, and approved by the Engineer.

244.3 Products and Materials.

a. Concrete. Concrete shall conform to Section 230, Type "A" of the City Standard Specifications.
b. Integral Color. The color of the concrete shall be approved by the Engineer and meet ASTM C979. The color shall be added to the concrete at the batch plant. The color shall be "Solomon 306 Toffee" or approved equal.
c. Powder Antique Release Agent. The release agent shall be LITHOCHROME Antiquing Release "A-21 Deep Charcoal", or approved equal. A release agent is required when stamping concrete.
d. Pattern. The pattern shall match a running bond brick pattern and shall be approved by the Engineer prior to production. All imprinting tools used in the execution of this product shall be approved by the product manufacturer.
e. Cure and Sealant. All imprinted concrete slabs shall be cured and sealed in accordance with the product manufacturer's recommendations and specifications.

244.4 Execution.

a. The area to receive imprinted concrete shall have the subgrade prepared and compacted conforming to Section 234.4 of the City Standard Specifications.
b. Formwork, reinforcement, control joints, and/or expansion joints shall be provided in accordance with the plans and Section 234 of the City of Columbia Standard Specifications. The concrete shall be placed and screeded to the finished grade, and floated to uniform surface using standard finishing techniques.
c. Powdered antiquing release agent shall be applied evenly to the surface of the fresh concrete using a minimum of four pounds per 100 square feet, or as required per the manufacturer's recommendations. Care shall be taken to ensure the powder does not stain any surrounding areas.
d. While the concrete is still in its plastic stage of set, the imprinting tools shall be applied to the surface.
e. When the concrete has cured to the point where it is walkable and not altered by the chosen excess removal technique, the excess antique release agent shall be removed to achieve the desired artistic effect. All loose powder shall be removed that may interfere with subsequent cure and sealer.
f. Immediately after completing the excess release agent removal process, approved curing and sealing methods shall be applied in accordance with the manufacturer's recommendations.

244.5 Measurement and Payment. Payment for the Work complete in place shall include necessary excavation, compacting the subgrade, materials, equipment, and labor, and any work incidental thereto. Payment will be made under:

Item No. 244.1. Colored imprinted concrete, per square foot.

SECTION 250

CONCRETE STRUCTURES

250.1. Description. Concrete structures shall include drainage structures such as reinforced concrete boxes, culverts, junction boxes, curb inlets, manholes, side opening inlets, paved channels, etc., also retaining walls and any special concrete structures. Circular junction boxes, side opening inlets, and manhole structures are acceptable in addition to the rectangular structures shown in the details.

250.2. Materials.

250.2.1. Concrete.

All materials, proportioning, slump, and air-entertainment for Portland cement concrete shall conform to requirements of the current MoDOT's Standard Specifications for Highway Construction (MSSHC), Section 501, for Class B-1 air-entrained concrete and all other sections as referenced in the MoDOT MSSHC unless otherwise specified by the Engineer.

Sampling and testing of concrete and materials shall be made under the direction of the Engineer, who shall have access to all places where concrete materials are stored, proportioned, mixed or placed. A recognized testing laboratory, selected by the Contractor and approved by the Engineer, shall be employed by the Contractor to test cement and aggregates proposed for inclusion in the work, to design the concrete mix, and to test all concrete cylinders. The Contractor shall furnish the laboratory with adequate samples of aggregates and cement to permit required testing.

The tests listed below shall be performed by the laboratory with certified test results submitted to the Engineer for his approval. Materials to be tested and testing shall be according to the following:

a. Cement shall be sampled and tested according to ASTM C 150 and C 175.

b. Coarse and fine aggregates shall be sampled and tested as follows:

Sampling	ASTM D 75
Gradation	ASTM C 136 and C 117
Impurities	ASTM C 40 (Sand), C 123, C 142 and AASHTO-T10
Soundness	ASTM C 88, if required

c. The determination of slump of concrete shall conform to ASTM C 143.

d. Concrete test cylinders shall be cast and tested in accordance with ASTM C 31 and C 39. The Contractor shall make three (3) job cylinders for each 50 cubic yards or fraction thereof of contract, but not less than one set for any one day's operations, and not less than one set of (3) cylinders for each 5000 square feet of surface area for walls and slabs shall be taken. Surface area shall be considered the area of one face of wall or slab. All cylinders shall be cured under the same

conditions as job concrete. Job cylinders shall be identified at the time cast as to which pour is represented.

The Contractor shall ship or deliver two (2) cylinders to the laboratory on the fourth day, one of which is to be tested on the seventh day, the other to be laboratory cured and tested on the twenty-eighth day. One (1) cylinder shall be shipped on the twenty-fourth day and tested on the twenty-eighth day.

The Contractor shall furnish the City three (3) copies of test reports for concrete test cylinders. Unsatisfactory tests of job cylinders shall make the concrete concerned subject to rejection, with consequent removal and replacement by the Contractor at his expense.

Cold Weather Requirements. Placing of concrete in cold weather shall conform to ACI 306 – Cold Weather Concreting in addition to the following specifications. No concrete shall be placed on iced or frozen subgrade or when temperature is below thirty-two degrees Fahrenheit (32° F.). Concreting shall not be continued when the air temperature is below forty degrees Fahrenheit (40°F.) unless the following conditions are attained:

a. Mixing water shall be heated to a maximum of one hundred fifty degrees Fahrenheit (150°F.).

b. Aggregates shall be heated until free of all ice and frost.

c. The concrete temperature after mixing shall be between fifty degrees Fahrenheit (50°F.) and seventy degrees Fahrenheit (70°F.) if the air temperature is twenty degrees Fahrenheit (20°F.) to forty-five degrees Fahrenheit (45°F.).

d. After the concrete is placed, it shall be covered, protected, and heated so as to maintain a maximum of seventy degrees Fahrenheit (70°F.) air temperature for the first twenty-four (24) hours and fifty degrees Fahrenheit (50°F.) air temperature for the next six (6) days.

e. Moist conditions shall be maintained during the heating period.

f. All covering, heating equipment, etc., shall be on hand and approved by the Engineer before any concrete is placed.

Admixtures shall be used only with the approval of the Engineer. Calcium chloride is not an acceptable admixture.

Hot Weather Requirements. Placing of concrete in hot weather shall conform to ACI 305 – Hot Weather Concreting in addition to the following specifications. No exposed concrete is to be placed in air temperatures above one hundred degrees Fahrenheit (100°F.). Cover, protect and cool work as required to maintain the temperature of the concrete below one hundred degrees Fahrenheit (100°F.). The concrete temperature, after mixing shall not be greater than eighty-five degrees Fahrenheit (85°F.). Spray and/or shade aggregate piles and cool mixing water is required.

250.2.2. Reinforcing steel shall conform to the requirements of Section 238 of these specifications

250.3. Construction

250.3.1. Forms for Concrete Structures. Forms shall conform to the shape, lines and dimensions of members called for on plans, and shall be sufficiently rigid and tight to prevent leakage of mortar. They shall be properly braced or tied together to maintain their position and shape when concrete is tamped or vibrated. Forms may be constructed of:

a. Lumber, No. 2 or better, with a minimum thickness of one (1) inch, and containing no holes or loose knots. Ship lap may be used where so specified on the plans. Form liners shall be one-fourth (1/4) inch plywood or approved fiber board on one (1) inch solid backing.

b. Plywood forming material may be used if three-fourths (3/4) inch plywood forms have studs on sixteen (16) inch centers or five-eighths (5/8) inch plywood forms have studs on twelve (12) inch centers.

c. Steel forms may be used if of a reputable manufacturer and in first class order, free from dents, etc.

All exposed corners and edges shall be provided with three-fourths (3/4) inch chamfer. Cleanouts shall be provided as required to remove sawdust and debris. All contact surfaces shall be oiled sparingly.

Wall form ties shall be steel of the loop or snap type with one and a half (1 1/2) inch breakback and with a cone the full depth and not larger than one (1) inch diameter. For other forms use pencil rods and cut back inside the concrete.

The Engineer's approval of forms shall be required before any concrete is placed.

250.3.2. Placing Reinforcing Steel. All reinforcing shall be free from scale, rust or coatings which will reduce the bond on the concrete. Bars shall be accurately bent and placed as indicated on the shop drawings and securely supported and tied with #16 annealed iron tie wire at all intersections to prevent movement during the placement of concrete.

Lap and tie the reinforcing steel together at splices. Splices shall be staggered as shown on the plans.

Reinforcing steel shall be placed for minimum concrete coverage as follows:

a. Three (3) inch for bottom steel in footings and slabs poured on subgrade

b. Two (2) inch from surface to be exposed to water or earth backfill

c. One and a half (1 1/2) inch for walls, beams and columns above ground

d. One (1) inch from top of slabs

Consult the plans for any exception to the above.

The Engineer's approval is required at the completion of placing reinforcing steel prior to the placing of any concrete.

250.3.3. Placing Concrete. Prior to placing concrete, all water shall be removed from excavations; no concrete shall be placed under water; subgrade for slabs less than twelve (12) inches thick shall be dampened. All debris shall be removed from the forms.

Wall concrete shall be placed continuously in horizontal layers of eighteen (18) inch lifts. Placing locations shall not be more than ten (10) feet apart. Tremies are required when the concrete has to be dropped farther than five (5) feet. Surface water shall be drained off and mixing water shall be reduced as required in the top layers of deep pours.

The working face of the concrete shall be kept plastic and "alive." High frequency vibrators shall be used at all times, supplementing as required with hand tamping, slicing, etc. Avoid vibrator contact against finished face forms of reinforcing steel adjacent to partially set concrete. Vibrators shall not be used to move or push the concrete laterally. Avoid over-vibrating.

Concrete shall be protected against rain or immersion under water for at least twelve (12) hours.

250.3.4. Construction Joints. Construction joints shall be made only at points shown or noted on the Plans, except when otherwise approved by the Engineer. Vertical construction joints in the reinforced concrete boxes shall be spaced at a maximum of thirty (30) feet on center. Reinforcing shall be carried continuously through all construction joints. Construction joints shall be formed straight and true with finished edges.

Where a joint is to be made, the surface of the concrete shall be thoroughly cleaned and all laitance removed. The joint shall be thoroughly wetted and slushed with a coat of cement grout immediately before placing of new concrete. Grout shall be mixed using a ratio of one (1) to two and a half (2 1/2) parts of cement to sand.

250.3.5. Removing Forms. Remove forms only after concrete has safe and sufficient strength and only with approval of the Engineer.

250.3.6. Concrete Finish. Immediately after the removal of forms, the Engineer will examine the exposed concrete. Any concrete not conforming to the lines and grades shown on the Plans, or which shows poor joints, voids, stone pockets, honeycomb and otherwise defective areas shall be considered as not conforming with these specifications, and shall be replaced by the Contractor at his expense, except in cases where the Engineer approves patching the defective parts of the structures. Permission to patch any defective parts of the structure shall not waive the Engineer's right to require the replacement of defective parts if the patching does not, in his opinion, satisfactorily restore the quality and appearance of these defective parts.

Specific concrete finishes required will be as follows:

a. Top of drainage structure to slab: sand float.

b. Inside of drainage structure top slab and walls: form-finish with rough spots as well as honeycombing removed; ties to be broken and tie holes grouted.

c. Drainage structure floor slab: sand float.

d. Outside of structure wall: ties to be broken and tie holes grouted with honeycombing removed.

e. Exposed structural concrete surfaces: hand rubbed to a smooth finish with a carborundum brick until form prints are removed.

250.3.7. Curing of concrete shall be maintained continuously for seven (7) days after placing the concrete. Concrete temperature is to be maintained between fifty degrees Fahrenheit (50°F.). and one hundred degrees Fahrenheit (100°F.). Moisture is to be retained in the concrete by the following means:

Walls and Structures

a. Cover with tarps and leave form on seven (7) days, or

b. Cover with cotton batts continuously wet seven (7) days, or

c. Spray approved membrane, one (1) gallon to two hundred (200) square feet for unfinished surfaces only.

Slabs

a. Pond, or wet cotton batts, or two (2) inch wet sand blanket, or curing paper with sealed edges. Apply immediately after finishing.

250.3.8. Welding. All welding shall be shielded arc, fusion welding, made in conformity with the requirements of the "Specification for the Design, Fabrication and Erection of Structural Steel for Buildings" of the A.I.S.C. and the "Code for Arc and Gas Welding in Building Construction" of the American Welding Society, as amended to date. Methods employed and technique shall be subject to the approval of the Engineer.

250.3.9. Maintenance of Storm Sewers During Construction. All storm sewers, drain lines, and appurtenances installed under this Contract must be kept reasonably clean during construction. The Contractor shall at all times maintain the storm sewers and appurtenances so as to prevent obstructing surface water.

250.3.10. Protection from Vandals. It will be the Contractor's responsibility to protect fresh concrete from vandals during the curing process. Any concrete work damaged by vandals will be inspected by the Engineer and subject to removal if the Engineer judge the damage to

create a safety hazard, or would accelerate deterioration of the concrete surface, or if the damage area is unsightly and detracts from the overall aesthetics of the project.

250.4. Basis of Payment. Unless provided otherwise, all concrete structures, complete in place, will be paid for at the Contract unit price per cubic yard, measured to the nearest one-tenth (1/10) cubic yard, which payment shall be full compensation for furnishing and installing all concrete and reinforcing steel, all forming, all excavation and backfill required as set forth in these specifications, and all other labor and incidental items necessary to complete the structures in accordance with the detailed drawings and these specifications. Payment will be made under:

Item No. 250.1. Structural concrete, per cubic yard.

SECTION 260

STORM SEWERS

260.1. Description. Storm sewer construction shall consist of furnishing all labor, materials and equipment for the complete installation of sewers and appurtenances in accordance with the standards, drawings, general conditions, and detail specifications. Unless indicated otherwise in these specifications, the word "Sewer" shall refer to pipe sewers, box culvert sewers, or paved channels.

260.2. Standards. Whenever any reference is made to ASCE, ASTM, AASHTO, AWWA, and ASA Standard Specifications, the specification referred to shall be understood to mean the latest revision of said specifications or standards as amended to date of letting of Contract. RCP, HP, HDPE, and CMP shall be the only pipe material used in the right of way. Only RCP and HP shall be used under arterials, collectors, and cul-de-sacs.

	Acceptable location		
Pipe	Arterials, collectors, cul-de-sacs	Right of Way (other than arterials, collectors, or cul-de-sacs)	Easements
RCP	X	X	X
HP	X	X	X
HDPE		X	X
VCP			X
DIP			
CMP		X	X

260.3. Materials.

260.3.1. Concrete. Concrete used in the construction of concrete storm sewers and drainage structures and appurtenances shall conform to Section 250 - Concrete Structures.

260.3.2. Reinforced Concrete Pipe (RCP). All reinforced concrete pipe shall conform to ASTM Designation C 76-62T. RCP shall be Class III with a D-load of 1350. This specification covers reinforced concrete pipe of twelve (12) to one hundred eight (108) inches, depths of fill of up to 13 feet above pipe, and is intended for use in conveyance of storm water and for the construction of culverts. All other installations shall be approved by the Engineer.

The interior surfaces of the pipe shall be a smooth true cylindrical surface free from undulations or corrugations. Each pipe shall be marked by the manufacturer with a "Q Cast" stamp to certify the pipe was produced by an American Concrete Pipe Association (ACPA) certified plant. The following additional information shall be clearly marked on the inside of each section of pipe by indenting on the pipe section or by painting thereon with waterproof paint:

a. Pipe class.
b. Date of manufacture.
c. Name or trade-mark of the manufacturer.

260.3.3. High Density Poly Ethylene Pipe (HDPE). All HDPE pipe shall conform to AASHTO M294. HDPE pipe to be ADS N-12 WT IB (water tight, integral bell) smooth interior, dual wall or approved equal. For 48" diameter pipe and smaller, minimum cover shall be one foot. For 54" and 60" diameter pipe, minimum cover shall be two feet. All HDPE pipe shall contain a minimum content of 2% carbon black as required by ASTM D3350. Pipe shall be furnished with an integral reinforced bell with a bell tolerance device and elastomeric gasket to meet ASTM D477 and ASTM D3212.

260.3.4. Cast Iron Pipe and Castings.

a. Cast Iron Pipe: All cast iron pipe shall conform to ASA A21.6 or A21.8 and shall be furnished with standardized mechanical joints and accessories conforming to ASA A21.11.

b. Cast Iron: All iron castings used in connection with storm sewers and their appurtenance structures (manhole and catch basin rings and covers, catch basin castings, inlet plates and grating, manhole steps or ladder irons, etc.) shall be made from tough, gray iron of even grain and tensile strength of not less than 35,000 pounds per square inch, conforming to ASTM Designation A 48, Class No. 35B. The castings shall conform to the shapes and dimensions shown on the standard drawings, be clean and whole, and without blow or sand holes or other defects, and all parting fins and pouring gates shall have been removed. No plugging or filling in of holes will be permitted and all such castings, except the buried portion of manhole steps or ladder rungs shall be cleaned and painted with one (1) coat of coal tar before being delivered to the site.

260.3.5. Vitrified Clay Pipe (VCP). All VCP shall conform to AASHTO M65. Provide extra strength pipe under roadways.

260.3.6. Corrugated Metal Pipe (CMP). Wherever shown on the plans and profiles, or required by the Engineer, corrugated metal storm sewer culvert pipe, complete with connecting bands, elbows, and fittings, may be used.

CMP shall be aluminized type 2 (AASHTO M36 & M274) or polymeric precoated (AASHTO M36, M245 & M246) galvanized (AASHTO M36 & M218) sheet or coils. Polymeric coating shall be Dow "TRENCHCOAT" or approved equal, 10 mils thick on both inside and outside of pipe.

Corrugated metal culvert pipe gage requirements shall conform to the specifications of the following table unless otherwise specified by the plans and specifications or by the Engineer.

Where zinc coated sheets and coils (M218) are to be used, the gage requirements of the following tables shall be increased to the next heaviest gauge.

Circular Culvert Pipe

Diameter	Gage	Diameter	Gage
12"	16	42"	14
15"	16	48"	14
18"	16	54"	12
24"	16	60"	12
30"	16	72"	10 up to 16 feet
36"	16		

Arch Culvert Pipe

Equivalent Diameter	Gage	Span	Rise
15"	16	18"	11"
18"	16	22"	13"
21"	16	25"	16"
24"	14	29"	18"
30"	14	36"	22"
36"	14	43"	27"
42"	12	50"	31"
48"	12	58"	36"
54"	12	65"	40"

Wherever corrugated metal culverts are installed on railroad property which is occupied by tracks or which may be occupied by tracks at any time in the future, then it shall conform to the A.R.E.A. "Specifications for Corrugated Metal Culverts."

Diameter of Pipe	Minimum Gage of Metal
12" to 18"	14
20" to 24"	12
26" to 36"	10
38" to 60"	8

Pipes larger than sixty (60) inches require special considerations and special specifications.

Corrugated metal storm sewer pipe shall be handled in such a manner that it is not chipped, dented or bent. If in handling the culvert the base metal is exposed in any way then it shall be rejected or repaired to the satisfaction of the Engineer.

260.3.7. High Performance Polypropylene Pipe (HP). HP pipe shall have a smooth interior and an annular corrugated exterior. Twelve (12)-inch through thirty (30)-inch HP pipe shall meet or exceed ASTM F2736 and AASHTO M330. Thirty-six (36)-inch through sixty (60)-inch HP pipe shall meet or exceed ASTM F2881 and AASHTO M330. The HP pipe is intended for use in conveyance of storm water and for the construction of culverts.

The minimum depth of fill above the pipe shall be one foot for twelve (12)-inch through forty-eight (48)-inch HP pipe. The minimum depth of fill above the pipe shall be two feet for sixty (60)-inch HP pipe. The maximum depth of fill above pipe shall be 9 feet. Backfill for minimum and maximum applications shall meet manufacture's specifications. All other installations shall be approved by the Engineer.

Polypropylene compound for pipe and fitting production shall be impact modified copolymer meeting the material requirements of ASTM F2736, Section 4.

All drainage structures used with HP pipe, including inlets, junction boxes, and flared end sections, shall be precast concrete, as specified for RCP pipe.

260.3.8. Encasement Pipe. When circular corrugated iron lineal plate or structural plate pipes or tunnels are installed on railroad property which is occupied by tracks or by tracks at any time in the future, then it shall conform to A.R.E.A. "Specifications for Corrugated, Structural, Plate Culverts and Arches." The minimum gage of the metal shall be as follows:

Neutral Axis Diameter	Minimum Gage
48"	8
60"	8
62"	7
72"	7
74"	5
84"	5

260.4. Joints for Reinforced Concrete Pipe.

260.4.1. Flexible Compression Joints. Flexible compression joints may be made with rubber gasket, rubber "O" rings, preformed plastic compound, mastic, or butyl sealants. Rubber gasket and rubber "O" rings which shall conform with ASTM C 443-59T. Preformed plastic compound shall be either rope form or flat tape form conforming to ASTM C990. Primer, as recommended by the manufacturer, shall be used to maintain the material in position while pipe sections are being joined. Mastic and butyl sealants may be used in accordance with ASTM C990-96. Mastic shall be applied to the bottom half of the bell or groove and the top half of the spigot or tongue.

260.5. Joints for High Density Poly Ethylene Pipe.

260.5.1. Pipe shall be joined using a bell & spigot joint meeting AASHTO M252, AASHTO M294 or ASTM F2306. The joint shall be water-tight and gaskets, when applicable, shall meet the requirements of ASTM F477. Gaskets shall be factory installed with a removable wrap to ensure gasket is free from debris. A joint lubricant supplied by the manufacturer shall be used on the gasket and bell during assembly. Field joints shall provide circumferential and longitudinal strength to maintain the pipe alignment, prevent separation of pipe and prevent infiltration of fill material.

260.5. Joints for Cast Iron Pipe.

260.5.1. Open Bell Joints. The greatest care must be exercised in handling the jointing compound so that the best possible joint may be obtained. Each must be poured at one pouring. If one (1) ladle will not hold enough, two (2) or more ladles must be used, so that the pouring is done in an absolutely continuous stream until the joint is filled. The jointer shall not be removed until the gate has had time to harden. For melting the jointing materials a gasoline furnace shall be used, because a closer control of the heat than can be obtained than by a coke or coal furnace is essential. The melting pot shall be at all times within easy reach of the joint at a distance of not over twenty-five (25) feet so that the jointing compound shall, under no circumstances, be chilled in being carried from the melting pot to the pipe. The contents of the kettle shall be well stirred before taking out each ladle full. The interior of the pipe must be kept perfectly clean during the progress of the work, and the end of the pipe and its branches shall be closed with an iron or wooden plug whenever the work shall temporarily cease. Where lead is used as a jointing compound, it shall be thoroughly caulked after the jointer has been removed. The price bid shall include the placing of all pipe fittings and plugs. All joints shall be made in accordance with best practices.

260.5.2. Universal Joints. The tightness of the universal pipe joint is dependent upon the perfection of the contact of the machined edge of the spigot and with the tapered, machined surface of the bell end. Before lowering the pipe into the ditch, the machined surfaces of both ends of the pipe must be scraped with some tool such as a knife, brushed with a wire brush and washed with a cloth saturated with kerosene, then wiped clean and carefully examined for burrs or pits and other imperfections. White lead which has been thinned so that it can be applied with a brush, shall then be applied to the machined surface contact with the bell of the pipe to be joined. After lowering the pipe, the bell of the pipe in place shall be carefully cleaned by wiping and white lead applied to the machined surface. Care is necessary during this operation to have a perfectly clean surface at all times as a small amount of sand may give trouble after the joint is made. After inserting the pipe, the bolts are inserted with the heads in reverse direction, to permit the use of both wrenches at the same time, lock washers are applied and the nuts turned on as far as they can be by using the wrenches with one hand and without pipes or other extensions to give greater leverage. Damage often is done to the pipe by excessive tightening. Bolts, washers and nuts shall be furnished by the Contractor.

260.5.3. Mechanical Joints. Mechanical joints specification shall conform to ASA Designation ASA-A21.11.

260.6. Joints for Vitrified Clay Pipe.

260.6.1. Flexible Compression Joint. Factory made vitrified clay pipe gasket may be used conforming with ASTM Designation C 425-60T.

260.6.2. Hot Poured Joints. Hot poured joints may be allowed, if the material used and the pipe jointing procedures are approved by the Engineer prior to construction. The joint compound shall be heated to a temperature of three hundred fifty degrees to four hundred degrees Fahrenheit (350° to 400°F.) as may be necessary to provide a smooth and rapid pour.

260.7. Joints for High Performance (HP) Polypropylene Pipe.

260.7.1. Pipe shall be joined with a gasketed integral bell and spigot joint meeting the requirements of ASTM F2736, for applicable diameters. HP pipe shall be watertight according to the requirements of ASTM D3212. Spigots shall have gaskets meeting the requirements of ASTM F477. Gasket shall be installed by the pipe manufacturer and covered with a removable, protective wrap to ensure the gasket is free from debris. A joint lubricant available from the manufacturer shall be used on the gasket and bell during assembly. HP pipe shall have a reinforced bell with a polymer composite band installed by the manufacturer.

Fittings shall conform to ASTM F2736, for applicable diameters. Bell and spigot connections shall utilize a spun-on, welded or integral bell and spigot with gaskets meeting ASTM F477. Fitting joints shall meet the watertight joint performance requirements of ASTM F2736 or ASTM D3212.

To assure watertightness, field performance verification may be accomplished by testing in accordance with ASTM F2487. Use manufacturer's recommendation for leakage rates.

260.8. Sewer Construction.

260.8.1. Excavation and Backfill. All excavation for structures, trench excavation, and backfilling for storm sewer construction and all related work shall be performed in accordance with Section 201 of the specifications. RCP, VCP, and DIP shall be considered rigid pipes. HDPE and CMP shall be considered flexible pipe.

260.8.2. Pipe Bedding.

260.8.2.1 RCP. Pipe shall be bedded according to the Type 3 installation as recommended by the American Concrete Pipe Association and details bound in this manual.

260.8.2.2 CMP and HDPE. Pipe shall be bedded according to manufacturer's recommendations and the details for flexible pipe bound in this manual.

Should any excess material be removed from the ditch bottom, the space shall be filled with the approved material and thoroughly tamped, with a pneumatic tamper to the satisfaction of the Engineer, or replaced with a six (6) inch thick layer of approved granular material on top of other approved compacted materials.

Regardless of the method used to transfer the line and grade from the stakes to the sewer, each pipe shall be checked for line and grade using a method approved by the Engineer.

260.8.3. Laying the Pipe. All pipe shall be protected during handling against shock and free fall.

RCP shall, at the Contractor's option, be furnished with factory cast lift holes. Lift holes shall be 2.5 inches in diameter or less for pipes with inside diameter of 60 inches or less. Lift holes shall be 3.5 inches in diameter or less for pipes with inside diameter greater than 60 inches. No more than two (2) holes will be allowed in any one (1) piece of pipe. Drilling of lift holes on

site is not acceptable. Any rebar visible in a lift hole shall be cause for rejection. Lift holes shall be plugged with a pre-manufactured plug designed specifically for plugging RCP holes (Popit or equal) or grouted full. The filled hole shall then be covered with an adhering sheet membrane (Grace Ice and Water Shield or equal) or a coat of bituminous material. Regardless of the method used, Contractor shall be responsible for the final water tightness of the pipe.

The laying of pipe in finished trenches shall be commenced at the lowest point and installed with the bell end forward or upgrade. All pipe shall be laid with ends abutting and true to line and grade established with a laser. They shall be carefully centered so that when laid they will form a sewer with a uniform invert.

Each piece of pipe shall be checked for vertical and horizontal alignment immediately after being laid.

Preparatory to making pipe joints, all surfaces of the portions of the pipe to be jointed, or of the factory made jointing materials, shall be clean and dry. Lubricants, primer, adhesives, etc., shall be used as recommended by the pipe or joint manufacturer's specifications.

The joints shall be wiped inside, removing all surplus joint compound and dirt from the interior of the pipe. Twelve (12) inch pipe and smaller shall be wiped by means of a disc attached to a rod not less than four (4) feet long worked continuously through the line of pipe.

When cement mortar, Kalktite or other approved joint compounds are used to make the joint in reinforced concrete pipe, it shall be made as follows:

In the bottom half of the bell shall be placed a sufficient amount of joint compound to thoroughly fill the annular space, and the next pipe inserted into place. The remainder of the annular space shall be completely filled on the inside and outside of the joint, around the circumference of the pipe, and the joint wiped on the inside of the pipe to remove all excess joint material.

No pipes may be trimmed unless by order of the Engineer. Pipes having defects that do not cause their rejections shall be so laid as to place these defects where they will be of least consequence.

Trenches shall be kept water-free and as dry as possible during bedding, laying and jointing and for as long a period as required to protect the pipe joints and concrete in structures.

As soon as possible after the joint is made, sufficient material shall be placed alongside each side of the pipe to offset conditions that might tend to move the pipe off line and grade.

260.9. Manholes and Junction Chambers.

260.9.1. Precast Manholes. Precast manholes shall be constructed as shown in the standard drawings, as specified herein and as directed by the Engineer.

260.9.2. Manhole Base and Invert. The manhole base and invert shall be constructed of Class E concrete as specified under Section 250 of these specifications. All bases

and inverts shall be poured individually in one continuous pour for each, unless otherwise specified and particular care taken to make channels smooth and perfect. All manhole inverts and bases shall conform to the applicable manhole standards.

Precast manhole bases may be used with precast manholes provided the design of the base has been approved.

260.9.3. Manhole Rings and Covers. The rings and covers of all manholes shall be set at the elevation shown on the drawings and solidly built into place. Concrete rings shall be grouted with cement mortar.

Plastic adjusting rings shall be injection molded-recycled HDPE as manufactured by LADTECH, Inc. or approved equal and installed as per manufacturer's recommendations The manhole adjusting rings shall be molded from high density polyethylene as defined in ASTM Specification D-4976. The annular space between the rings and cone basin, the rings, and the rings and cover frame shall be sealed utilizing an approved butyl sealant. The Contractor shall utilize flat and sloping units to match the required slope and or grade of the structure.

260.10. Inlets.

260.10.1. Precast inlets shall be constructed in accordance with the standards or approved equal. Concrete for precast concrete inlets shall conform to the applicable sections of these specifications for Class D concrete.

260.10.2. Reinforced concrete inlets shall conform to the standard drawings and the applicable sections of these specifications for Class D and Class E concrete. Concrete cover over steel reinforcement shall be not less than one (1) inch for covers and one and one-half (1 1/2) inches for walls and floors. All exposed concrete shall have smooth steel trowel or brushed finish. Interiors of structures shall have the forms removed and surface voids filled.

260.11. Reinforced Concrete Box Culverts.

260.11.1. General. Reinforced concrete box culverts shall be constructed in strict accordance with this section and Section 250 of these specifications.

260.11.2 . Composition of Concrete. To determine the actual mixed proportions of cement, aggregates and water proposed for use on the project, the Contractor shall furnish all the information required by the testing laboratory retained by the Engineer. The testing laboratory will proportion a concrete mix based upon the requirements of these specifications and will determine the compressive breaking strength of these specimens at seven (7) days and will determine that the mix is in strict compliance with the specifications.

260.12. Paved Ditches and Rip-Rapping. Paving concrete for paved ditches shall conform to Class E concrete specifications herein described and shall correspond with the standard drawings or approved equal.

The material for riprap shall consist of a predominantly one-sized, durable stone, shot rock or broken concrete. Acceptance by the Engineer may be made by visual inspection. Riprap

material shall be either Type 1 or 2 per below.

Type 1 Riprap shall consist of at least 40 percent of the mass being pieces having a volume of one cubic foot or more.

Type 2 Riprap shall consist of at least 60 percent of the mass being pieces having a volume of one cubic foot or more.

A geotextile material shall separate the subgrade from the riprap. Geotextile material shall be AASHTO M288-96 Class 2 with a minimum permittivity of 1.0 sec^{-1} and an apparent opening size of 0.22 mm MARV. Lap seams per manufacturers recommendations.

Riprap shall be placed to the approximate shape and thickness shown on the plans for the specified ditch or as directed by the Engineer. The rock shall be dumped on a subgrade of reasonably uniform density and left in a rough condition meeting the approval from the Engineer.

Grouted riprap shall not be allowed unless approved by the Engineer.

260.13. Toewalls. A toewall or extension plate shall be provided where any pipe daylights.

260.14. Headwalls, Wingwalls and Endwalls. Design of these structures shall conform to the standards attached or to the approved details as submitted by the Engineer. Concrete shall conform with Class E concrete as outlined under Section 250 of these specifications.

260.15. Railroad Crossings. Wherever a railroad crossing is being constructed beneath or at grade the necessary permit for the construction will have been previously secured by the Contractor . It shall also be the responsibility of the Contractor to contact the railroad company prior to beginning of such crossings, and to proceed with the construction as directed by the railroad company.

All railroad crossings shall be made at right angles to the railroad tracks wherever possible, and shall be laid by jacking or tunneling.

260.16. Traffic. Provision shall be made for taking care of traffic in accordance with Section 7.5 of these specifications and as may be provided in Special Provisions of the Proposal. Contractor shall protect installed material from damage from construction loads.

260.17. Existing Utilities. The Contractor shall provide for existing utilities in accordance with Section 7.9 and Section 8.5 and 201.9 of these specifications.

260.18. Replacement of Pavement. All pavement, surfacing, driveways, curb, walks, buildings, utility poles, guy wires, and other surface structures affected by construction operations in connection with the performance of the Contract, together with all sod and shrubs in yards, parks, and parking lots, shall be maintained and if removed, or otherwise damaged, shall be restored to the original condition thereof, as determined and approved by the Engineer,

unless otherwise specified on the plans.

The Contractor shall be responsible for, including any damage caused by settlement of backfill placed beneath pavements, street, road, and driveway surfacing, and drainage and other structures, and beneath sod in yards, parking lots, and parks, which may occur at any time prior to, and during the correction period after the date of final acceptance of the work covered by the Contract; during such period the Contractor shall at his own cost and expense refill all excavations where backfill damage to structures, pavements, surfacing, and sod caused by such settlement, to the satisfaction of the City. Should the Contractor fail to repair settlement which may occur as described above within thirty (30) days after being given notice thereof, the Owner shall have the right to repair such settlement and charge the cost of such repairs to the Contractor.

The Contractor will be held responsible for all damage to roads, highways, shoulders, ditches, embankments, bridges, culverts and other property, caused by him or any of his Subcontractors in hauling or otherwise transporting materials to and from the several sites of the work, regardless of the location of such damage. The Contractor shall make arrangements relative to the payment for, or repair or replacement of, such damage or damaged surfaces or structures which are satisfactory and acceptable to the Owners or Owner of such damaged surfaces or structures, or to their legally responsible officers, agents or other representatives, at the Contractor's own cost and expense.

260.19. Video Inspection. All storm drains including pipes, inlets, junction boxes, etc. shall be inspected using a video camera. Immediately prior to video inspection all storm drain facilities must be flushed with clean water, debris flushed from the facilities must be removed and properly disposed. The contractor shall provide and run a video camera to check for the presence of sags or other evidence of improper construction. The video shall show the restoration of all surface areas disturbed during construction as well as document that the tops of all inlets and junction boxes are properly adjusted to grade.

1. Furnish one copy of the video to Stormwater Utility. Video shall comply with the following requirements:

a. Full color (Not black and white)
b. Date and time of inspection
c. Inlet and Junction Box labels
d. Real time stationing of camera in pipe
e. Inspection of all joints, fittings, and lateral connections
f. Locations of observed deficiencies (i.e. bad joints, breaks, leaks, infiltration, etc.)
g. Pipe ponding in excess of ¾" identified by location
h. Minimum resolution of 800x600 pixels
i. Single sided DVD or CD utilizing MPEG compression
j. DVD/CD and box shall be labeled with manhole numbers, project title, and date

2. The City of Columbia reserves the right to reject storm drains based upon the video inspection, and complete own video inspection.

3. Faulty sections of storm drains, junction boxes or inlets rejected by the City shall be

repaired or replaced at the Contractors expense to produce a like new product in a manner acceptable to the Engineer.

4. The Contractor shall provide the City a video inspection to document the repair or replacement of any rejected work.

5. Camera Speed shall not be greater than 30 feet per minute.

6. Payment. There will be no direct payment for testing and inspections. The cost and expense of such work to the Contractor must be included in the price of the bid for storm drains and concrete structures.

a. The City of Columbia may complete a video inspection at no cost to the Contractor for the first video inspection.

b. All subsequent inspections completed by the City of Columbia will have a fee associated with it.

260.20. Measurement and Payment.

260.20.1. Pipe. Pipe shall be measured to the nearest lineal foot of the various sizes and types installed. This unit price shall include trenching, installation, pipe materials, bedding, backfill, compaction, restoration of private property, and all other items required to complete the installation of the pipe. Payment will be made under:

Item No. 260.1. Reinforced concrete pipe, per lineal foot
Item No. 260.2. High density polyethylene pipe, per lineal foot
Item No. 260.3. Cast iron pipe, per lineal foot.
Item No. 260.4. Vitrified clay pipe, per lineal foot.
Item No. 260.5. Corrugated metal pipe, per lineal foot.

260.20.2. Standard Drainage Structures and Appurtenances. Standard drainage structures shall be measured as a unit, complete and in place of the various types constructed. Payment will be made under:

Item No. 260.6. Description of structure, per each unit.

260.20.3. Reinforced Concrete Box Culverts and Special Concrete Structures. Reinforced concrete box culverts, special concrete structures, headwalls, wingwalls, endwalls, and paved channels may be measured by the lineal foot or by the cubic yard of concrete in accordance with Section 250, whichever is specified in the proposal form, and payment will be made accordingly for structures complete and in place, at the Contract unit price.

260.20.4. Connection to Existing Structures. The connections to existing structures required during construction shall be measured as a unit, complete. Payment will be made at the Contract unit price for connection to existing structure.

Item No. 260.7. Connection to existing structure, per each.

260.20.5. Pavement Replacement. Pavement replacement, whether asphaltic or concrete pavement, shall be measured by the square yard of acceptable material replaced within the project limits. Payment will be at the Contract unit price under:

Item No. 260.8. Concrete/Asphaltic pavement replacement, per square yard.

260.20.6. Riprap. Riprap, including excavation and geotextile, shall be measured by the square yard. Payment will be made at the Contract unit price under:

Item No. 260.9. Riprap Type 1 or 2, per square yard.

SECTION 500

EXCAVATION AND TRENCHING FOR SANITARY SEWERS

500.1. Description. This section covers excavation and trenching work and shall include the necessary clearing, grubbing, and preparation of the site; removal and disposal of all debris; excavation and trenching as required; the handling, storage, transportation, and disposal of all excavated material; all necessary sheeting, shoring, and protection work; preparation of subgrades; pumping and dewatering as necessary or required; protection of adjacent property; backfilling; pipe embedment; surfacing and grading; site restoration; and other appurtenant work.

500.2. General Requirements. Excavation shall provide adequate working space and clearance for the work to be performed therein. In no case shall excavation faces be undercut.

Subgrade surfaces shall be clean and free of loose material of any kind when concrete is placed undercut.

Backfilling and construction of fills and embankments during freezing weather shall not be done except by permission of the Engineer. No backfill, fill, or embankment materials shall be installed on frozen surfaces, nor shall frozen materials, snow, or ice be placed in any backfill, fill, or embankment. All rock which cannot be handled and compacted as earth shall be kept separate from other excavated materials and shall not be mixed with backfill or embankment materials except as specified or directed by the Engineer.

500.3. Classification of Excavated Materials. No classification of excavated materials will be made for payment purposes except for rock excavation as specifically noted in the project proposal. Excavation and trenching work shall include the removal and subsequent handling of all materials excavated or otherwise removed in performance of the Contract work, regardless of the type, character, composition or condition thereof except for rock excavation. Payment for rock excavation shall be based upon the depth of rock encountered and standard details 540.01 and 540.02. Payment for rock excavation at manholes or other structures shall be based on the outside diameter or dimensions plus 4 feet to allow a working space of 2 feet beyond each exterior wall.

500.4. Site Preparation. All sites to be occupied by permanent construction or embankments shall be cleared of all logs, trees, roots, brush, tree trimmings, and other objectionable materials and debris. All stumps shall be grubbed. In addition, subgrades for fills and embankments shall be cleaned and stripped of all surface vegetation, sod, and organic topsoil. All waste materials shall be removed from the site and disposed of by the Contractor and at his expense. Topsoil shall be stripped and stockpiled for reuse as specified herein.

500.5. Clearing. The Contractor shall do all clearing necessary for access, stringing of pipeline materials, and construction of the pipelines and appurtenant structure.

Contractor shall do all clearing necessary for performance of his work and shall confine his operations to that area provided through easements, licenses, agreements and rights-of-way. The contractor's entrance upon any lands outside of that area provided by easements, licenses, agreements or public rights-of-way, shall be at the Contractor's sole liability.

Property owners shall be notified by the contractor at least two (2) weeks prior to the proposed construction starting date. The notification will allow property owners to remove any small plants or flowers they desire to save.

Clearing along creek banks, ditches, swales, etc. shall be kept to a minimum as necessary for sewer or force main installation, to minimize bank erosion prior to riprap installation.

500.6. Use of Explosives. The Contractor shall comply with all laws, ordinances, applicable safety code requirements, and regulations relative to the handling, storage, and use of explosives, and the protection of life and property. The Contractor shall be responsible for all damage caused by his blasting operations. Suitable methods shall be employed to confine all materials lifted by blasting within the limits of the excavation or trench.

All rock which can't be handled and compacted as earth shall be kept separate from other excavated materials and shall not be mixed with backfill or embankment materials expect as specified or directed.

500.7. Unauthorized Excavation. Except where otherwise authorized, shown, or specified, all materials excavated below the bottom of concrete walls, footings, slabs on grade, and foundations shall be replaced, by the Contractor and at his expense, with concrete placed at the same time and monolithic with the concrete above.

500.8. Dewatering. The Contractor shall provide and maintain adequate dewatering equipment to remove and dispose of all surface and ground water entering excavations, trenches, or other parts of the work. Each excavation shall be kept dry during subgrade preparation and continually thereafter until the structure is to be built, or the pipe to be installed herein, is completed to the extent that no damage from hydrostatic pressure, flotation, or other cause will result.

All excavations for concrete structures or trenches which extend down to or below ground water shall be dewatered by lowering and keeping the ground water level beneath such excavations 12 inches or more below the bottom of the excavation.

Surface water shall be diverted or otherwise prevented from entering excavated areas or trenches to the greatest extent practicable without causing damage to adjacent property.

The Contractor will be held responsible for the condition of any pipe or conduit which he may use for drainage purposes, and all such pipes or conduits shall be left clean and free of sediment.

500.9. Sheeting and Shoring. If any sheeting or shoring is to be done an engineered plan shall be submitted to Sanitary Sewer Utility. The plan will be reviewed for loadings on the pipe. The plan must be approved by the Engineer prior to beginning work. Except where banks are cut back on a stable slope, excavation for structures and trenches shall be sheeted, braced, and shored, as necessary, to prevent caving or sliding.

Trench sheeting shall not be pulled before backfilling unless the pipe strength is sufficient to carry trench loads based on trench width to the back of sheeting, nor shall sheeting be pulled after backfilling. With the concurrence of the Engineer, sheeting shall be left permanently in the trench.

Where trench sheeting is left in place, such sheeting shall not be braced against the pipe, but shall be supported in a manner which will preclude concentrated loads or horizontal thrusts in the pipe. Cross braces installed above the pipe to support sheeting may be removed after pipe embedment has been completed.

500.10. Stabilization. Subgrades for concrete structures and trench bottoms shall be firm, dense, and thoroughly compacted and consolidated; shall be free from mud and muck; and shall be sufficiently stable to remain firm and intact under the feet of the workmen.

Subgrades for concrete structures or trench bottoms, which are otherwise solid, but which become mucky on top due to construction operations, shall be reinforced with one (1) or more layers of crushed rock or gravel. The stabilizing material shall be spread and compacted to a depth of not more than 4 inches, which shall be furnished and installed as specified for granular fills. Not more than 1/2-inch depth of mud or muck shall be allowed to remain on stabilized trench bottoms when the pipe bedding material is placed thereon. The finished elevation of stabilized subgrades for concrete structures shall not be above subgrade elevations indicated on the drawings.

All stabilization work shall be performed by and at the expense of the Contractor.

500.11. Topsoil Removal and Replacement. In all areas of the construction easement for sanitary sewers, in all areas to be graded or where fills or embankments are to be constructed and any other areas of the project where the original topsoil will be covered, damaged, or disturbed, the topsoil shall be removed, stockpiled, and replaced.

Topsoil shall be removed to a minimum depth of 6 inches or to the actual depth of the topsoil where greater than 6 inches, and shall be carefully segregated and stockpiled for replacement after construction has been completed. No mixing with other excavated materials or waste granular bedding materials will be permitted.

500.12. Trench Excavation. The Contractor shall not open more trench in advance of pipe laying than is necessary to expedite the work. The trench shall be backfilled at the end of each day except as may be required to begin the next day's work. Trenches in the road shall be plated with steel sheets or patched with cold patch overnight. The maximum length of open trench on any line under construction shall be 300 feet.

Except where tunneling is indicated on the drawings, or is permitted by the Engineer, all trench excavation shall be open cut from the surface.

a. Alignment and Minimum Cover. The alignment of each pipeline shall be fixed and determined from offset stakes. Vertical and horizontal alignment of pipes, and the maximum joint deflection used in connection therewith, shall be in conformity with requirements of the section covering installation of pipe. Establish required uniform line and grade in trench from benchmarks identified by City Engineer. Maintain this control for minimum of 100 feet behind and ahead of pipe-laying operation. Use

laser beam equipment to establish and maintain proper line and grade of work.

b. Limiting Trench Widths. Trenches shall be excavated to a width which will provide adjacent working space and sidewall clearances for proper pipe installation, jointing, and embedment and shall follow the minimum trench width (payline) shown on standard details 540.01 and 540.02.

1. Minimum Sidewall Clearance. Minimum permissible sidewall clearance between installed pipe and each trench wall, expressed in inches, shall be the outside diameter of the pipe divided by six (6) ($D_o/6$). Ledge rock, boulders, and large stones shall be removed to provide a minimum clearance of four inches (4") on each side of all pipes.

   The stipulated minimum sidewall clearance is not minimum average clearance, but is minimum clear distances which are required.

2. Maximum Trench Widths. The maximum trench width for sanitary sewer pipe is shown on standard details 540.01 and 540.02.

   Where necessary to reduce earth load on trench banks to prevent sliding and caving, the banks may be cut back on slopes and shall not extend lower than 1 foot above the top of the pipe.

c. Unauthorized Trench Widths. Where, for any reason, the width of the lower portion of the trench as excavated at any point exceeds the maximum permitted in the foregoing specifications: either; pipe of adequate strength, special pipe embedment, or arch concrete encasement, as required by the loading conditions and with the concurrence of the Engineer, shall be furnished and installed by the contractor and at his expense.

d. Mechanical Excavation. The use of mechanical equipment will not be permitted in locations where its operation would cause damage to trees, buildings, culverts, other existing property, utilities, or structures above or below ground. In all such locations, hand excavation methods shall be used.

   Mechanical equipment used for trench excavation shall be of a type, design, and construction, and shall be such operated, that the rough trench excavation bottom elevation can be controlled, that uniform trench widths and vertical sidewalls are obtained at least from an elevation of one foot above the top of the installed pipe to the bottom of the trench, and that trench alignment is such that pipe when accurately laid to specified alignment will be centered in the trench with adequate clearance between the pipe and sidewalls of the trench. Undercutting the trench sidewall to obtain clearance will not be permitted.

e. Cutting Asphalt or Concrete Pavement. Cuts in asphalt or concrete pavement or sidewalks shall be not larger than necessary to provide adequate working space for proper installation of pipe and appurtenances. Cutting shall be started with a

concrete saw in a manner which will provide a clean groove at least 1-1/2 inches deep along each side of the trench and along the perimeter of cuts for structures.

Pavement over trenches excavated for pipelines shall be removed so that a shoulder not less than 12 inches in width at any point is left between the cut edge of the pavement and the top edge of the trench. Where necessary, trench banks may be sloped back as needed, and the width of pavement removed shall be adjusted accordingly. Trench width at the bottom shall not be greater than at the top and no undercutting will be permitted. Pavement cuts shall be made to and between straight or accurately marked curved lines that, unless otherwise required, shall be parallel to the centerline of the trench. Temporary pavement patches shall contain a minimum of 3 inches of cold mix as noted in the Street and Storm Sewer Specification Standard Details–Pavement Replacement (120.01).

f. Excavation Below Pipe Subgrade. Except where otherwise required, pipe trenches shall be excavated below the underside of the pipe, as shown on the Pipe Embedment Detail 540.01, and 540.02, to provide for the installation of granular embedment pipe foundation material. Ledge rock, boulders, and large stones shall be removed to provide a minimum clearance of four inches (4") below all pipes.

g. Artificial Foundations in Trenches. Whenever so ordered by the Engineer, the Contractor shall excavate to such depth below grade as the Engineer may direct and the trench bottom shall be brought to grade with crushed stone foundation material, or such material as the Engineer may order installed. All timber, concrete, or other foundations made necessary by unstable soil shall be installed as directed by the Engineer. Compensation for extra excavation and timber, concrete, or other foundations, except where provided by contract unit prices, shall be made in accordance with the contract provisions for extra work.

Where crushed stone artificial foundations in trenches are required, the material shall be placed on suitably prepared subgrades and compacted by vibration, and shall be crushed rock or gravel free from dust, clay, or trash, graded 1-1/2 inches to No. 4 as defined in ASTM C33.

h. Bell Holes. Bell holes shall provide adequate clearance for tools and methods used in installing pipe. No part of any bell or coupling shall be in contact with the trench bottom, trench walls, or granular embedment when the pipe is jointed.

500.13. Pipe Embedment. Embedment materials for the sanitary sewer, both below and above the bottom of the pipe, classes of embedment to be used, and placement and compaction of embedment material shall conform to the requirements shown on the Pipe Embedment Details 540.01 and 540.02 and to the following supplementary requirements. RCP, VCP, and DIP shall be considered rigid pipes. PVC, HDPE and CMP shall be considered flexible pipe however, HDPE and CMP are not acceptable for sanitary sewer uses.

Embedment material shall contain no cinders or other material which may cause pipe corrosion.

a. Placement and Compaction. Granular embedment material shall be spread and the surface graded to provide a uniform and continuous support beneath the pipe at all points between bell holes or pipe joints. It will be permissible to slightly disturb the finished subgrade surface by withdrawal of pipe slings or other lifting tackle.

After each pipe has been graded, aligned, and placed in final position on the bedding material and shoved home, Category I (loosely placed uncompacted bedding material shall be placed under the center of the pipe a distance of $D_o/3$ before the pipe is placed). Category I bedding material shall be deposited and compacted to 95% on either side of the loosely placed bedding material and around each side of the pipe up to the springline and back of the bell or end thereof to hold the pipe in proper position and alignment during subsequent pipe jointing and embedment operations.

b. VCP. Pipe shall be bedded according to ASTM C12 and details for rigid pipe bound in this manual.

c. RCP. Pipe shall be bedded according to the Type 3 installation as recommended by the American Concrete Pipe Association and the details bound in this manual for rigid pipe.

d. DIP. Pipe shall be bedded according to ASTM A746 and the details for rigid pipe bound in this manual.

e. PVC. Pipe shall be bedded according to ASTM D2321 and the details for flexible pipe bound in this manual.

500.14. Trench Backfill. All trench backfill above the springline of the pipe embedment shall conform to the following requirements.

Classification of backfill materials. Backfill materials in these specifications shall conform to the Standard Installation Direct Design (SIDD) categories per the chart below.

SIDD Soil	USCS	Standard AASHTO
Gravelly Sand (Category I)	SW, SP, GW, GP	A1, A3
Sandy Silt (Category II)	GM, SM, ML, Also GC with less than 20% passing #200 sieve	A2, A4
Silty Clay (Category III)	CL, MH, GC, SC	A5, A6

If concrete arch encasement is required, a layer of backfill material not more than 8 inches deep may be placed over concrete arch encasement after the concrete has reached its initial set, to aid curing. No additional backfill shall be placed over arch encasement until the concrete has been in place for at least three (3) days.

a. Compacted Backfill. Compacted backfill will be required for the full depth of the trench above the embedment in the following locations:

1. Where beneath pavements, surfacings, driveways, curbs, gutter, walks, or other surface construction, or structures.

2. Where in street, road, or highway shoulders.

3. In established lawn areas.

At the option of the Contractor, compacted backfill may be: (1) suitable job excavated material; or (2) graded gravel as described below:

Sieve Size	% Passing
5/8"	90-100
½"	75-100
3/8"	30-75
#4	5-25
#8	3-6
#30	2.5-5
#200	1-2.5

b. Trench Backfill

1. Materials. All materials which are to be compacted by tamping or rolling, including all tamped embedment, shall be free from sticks, large roots, or other organic matter coarser than grass roots, stones, hard lumps, and clods, and shall have a moisture content such that optimum compaction is obtained when properly tamped or rolled. Debris, frozen material, large clods, stones, organic matter, or other unstable materials shall not be used for final backfill within two feet (2') of the top of pipe.

   Granular material for replacement of unsuitable foundation material removed from trench bottoms shall consist of coarse sand, lime gravel, and shall be free from dust, clay, and other materials which would cause the materials to crack or cake. When tested with square mesh laboratory sieves, not less than ninety-five percent (95%) shall pass a three-eighths (3/8) inch sieve and not more than five percent (5%) shall pass a No. 10 sieve.

   Flowable backfill shall be a Controlled Low Strength Material (CLSM). CLSM shall be composed of Portland cement, fly ash (optional), fine aggregate, coarse aggregate (optional), water, and a shrinkage compensator. Cement shall be either Type I or Type II Portland cement. Mixing water shall be potable. Air entrainment admixture shall consist of an organic compound which will result in air contents as prescribed by ASTM C 173 or C 231. Fine aggregate shall be washed and consist of clean, hard, durable and uncoated particles of natural or manufactured sand or a combination thereof, with or without mineral filler. Aggregate shall be free of injurious amounts of salt, alkali, vegetable matter or other objectionable material. Coarse aggregate shall be sound, durable, clean rock or broken concrete (2 inch to 8 inch square) to minimize the quantity of

CLSM. The CLSM shall be placed to a depth of 2 feet then coarse aggregate may be added to the CLSM mixture until the top of the CLSM and top of aggregate are approximately equal. The process may be repeated until the fill is completed. CLSM shall be removable (less than 100 PSI) and comply with the following mix design:

Cement	144 lbs
Water	396 lbs
Sand	2,698 lbs
Air entrainment	13%

Where CLSM is being placed over or adjacent to crushed stone backfill, a layer of filter fabric shall be installed between the two materials.

Inundated sand backfill is not acceptable.

2. Compaction. All backfill shall be thoroughly compacted by pneumatic tampers, or other approved methods, to the original state of consolidation of the soil encountered. Backfill shall be placed in uncompacted lifts not to exceed 6 inches and each lift shall be thoroughly and adequately compacted. Care shall be exercised not to disturb the pipe when placing backfill. The compacted earth backfill shall be brought to an elevation of approximately 6 inches below the finished surface grade and then surface grade or paving constructed. Testing shall be similar to that required at embankments per 500.15 except that tests shall be taken once for every 300 linear feet of trench or fraction thereof for every other lift. Backfill using aggregate does not require testing.

After backfill and compaction is complete trenches shall be leveled off and grading shall be performed as is necessary to restore yards or other grassed or sodded areas to their original condition or better.

Backfill under pavements shall be flowable fill. Flowable fill shall be placed from a maximum of 1 foot above top of utility to the underside of pavement base course. If pavement does not have a base course, stop flowable fill 6 inches below bottom of pavement and provide 6 inch cushion course of 1 inch clean aggregate. Maximum depths of CLSM shall be as described in 201.12.b.3. During emergency situations and for trenches wider than 6 feet, backfill under pavements shall adhere to 201.12.b.6 and 201.12.b.7 respectively.

c. Responsibility of Contractor for Backfill Settlement. The Contractor shall be responsible for the satisfactory compaction and maintenance thereof, of all trenches and structural excavation of any description required under this Contract. Contractor shall warrant their work for at least the correction period from the date of acceptance. If prior to the expiration of this warranty, any trenches or other excavations are found to have settled they shall immediately be reworked by the Contractor and restored to the specified grades. Any sod, paving, or other surfacing damaged by settlement of trenches shall be replaced by the Contractor and at his expense.

d. Topsoil Replacement. Topsoil removed and stockpiled in advance of trench excavation shall be replaced after trench backfilling operations are completed and initial settlement has taken place. Trench backfill shall be completed to such elevation as required to allow settlement and to permit the replacement of all topsoil which had been removed and stockpiled.

500.15. Fill and Embankments. Where filling is required to raise the subgrade under areas to be paved or surfaced, all fill materials shall consist of earth or other approved material. All organic or other undesirable material shall be removed. Where embankments, regardless of height, are placed against hillsides or existing embankments, either of which have a slope steeper than 1 vertical to 4 horizontal, the existing slope shall be benched or stepped in approximately 24 inch rises as the new fill is brought up in 8 inch maximum layers or lifts. The material bladed out, the bottom of the area cut into, and the embankment material being placed, shall be compacted to the required density. Material cut out, bladed into place and compacted shall not be measured and paid for directly but will be considered as incidental work.

All fill under paved surfaces such as streets and parking lots shall be compacted by a power roller or other approved equipment and the subgrade brought to a reasonably true and even plane. Earth used for fill shall be placed in layers not more than 8 inches thick, an uncompacted measurement, and shall be compacted as specified before the next layer is placed. Each layer shall be wetted or dried as necessary, and shall be compacted to the required density. Regardless of the type of equipment used, the roadway shall be compacted uniformly and the surface kept reasonably smooth at all times. If large pieces of heavy clay are encountered, the material shall be broken down by suitable manipulation to permit satisfactory embankment construction. If shale is encountered, the shale shall be broken down as much as practical and compacted at or above optimum moisture.

Each layer shall be uniformly spread, moistened as required, and then compacted to 90% of maximum density, obtained at the optimum moisture content, as determined by AASHTO Method T-99-38. The top 18 inches shall be compacted to 95% of maximum density. The field density of the lift will be determined in accordance with AASHTO T 191 or T 205, using the total material or T238, Method B Direct Transmission, for wet density. If nuclear density methods are used, moisture content will be determined in accordance with AASHTO T239. One test shall be taken for every 1,000 linear feet or fraction thereof for each lift. Testing is to be done by a third party independent testing agency or by the Contractor if the Contractor has demonstrated to the Engineer that Contractor employs qualified persons and maintains qualified equipment to conduct density testing. Test results shall be furnished on forms acceptable to Engineer. Costs of all testing and retesting are the responsibility of the Contractor.

500.16 Structural Backfill. Backfilling of all structures shall be permitted only after an adequate curing time, as determined by the Engineer, has elapsed.

All excavations shall be backfilled to the lines and grades shown on the drawings. In no instance shall backfill be dumped, bull-dozed, or otherwise deposited in bulk upon the newly-constructed structure. After the required curing time, the excavation shall be backfilled by depositing, entirely without shock and with careful pneumatic tamping, suitable earth, sand, or

other acceptable material in lifts not to exceed 6 inches in compacted thickness. Backfill shall be deposited at approximately the same elevation on opposite sides of the structure and shall be compacted in place to a density equal to or greater than ninety-five percent (95%) of maximum density as determined by the Standard AASHTO Method T-99-38. Inundated sand backfill shall not be used.

No trench backfill material containing rock, or debris from rock excavation, shall be placed in the upper 24 inches of the excavation except with the specific permission of the Engineer. Large stones may be placed in the remainder of the trench backfill only if well separated and so arranged that no interference with backfill compaction will result.

Any deficiency in the quantity of material for backfilling the excavation, or for filling depressions caused by settlement, shall be supplied by thc Contractor. All excavated material in excess of that necessary to fill the trench to the grade shown on the drawings shall be removed and disposed of by the Contractor.

500.17. Final Grading. After other outside work has been finished, and backfilling and embankments completed and settled, all areas on the site of the work which are to be graded shall be brought to grade at the indicated elevation, slopes, and contours. Use of graders or other power equipment will be permitted for final grading and dressing of slopes, provided the result is uniform and equivalent to hand work. All surfaces shall be graded to secure effective drainage. Unless otherwise shown, a slope of at least one percent shall be provided.

Topsoil removed and stockpiled as part of site preparation work shall be used to surface and finish all fills and embankments which do not require gravel surfacing.

Grading and surfacing shall be completed to the satisfaction of the Engineer.

500.18. Tests. As stipulated in the quality control section, all tests required for preliminary review of materials shall be made by an acceptable independent testing laboratory at the expense of the Contractor. A gradation test shall be made for each type of embedment or backfill material and one additional gradation test shall be made for each additional 500 tons of each material. Contractor shall furnish compaction test reports by a third party certified testing agency which is acceptable to the City. Tests shall be taken once for every 300 linear feet or fraction thereof for each lift. Costs of all tests and retesting shall be borne by the contractor.

500.19. Tunnel Excavation. Pipelines shall be constructed in tunnels of the type designated on the contract plans, in conformity with the following requirements: Before starting work on any tunnel, detailed drawings, specifications, and other data covering the lines to be used shall be submitted in accordance with the submittals section.

The minimum clear inside diameter of the tunnel liner shall not exceed the outside diameter of the carrier pipe joints or couplings by 4 inches unless specifically indicated on the drawings.

a. Casing Pipe. New, smooth, wall, welded steel pipe fabricated from ASTM A36 plate or ASTM A 570 sheet with a minimum yield point of 36,000 psi conforming to AWWA C200. The casing pipe shall have a wall thickness as follows:

Wall Thickness

Casing Diameter inches	Under Highways inches	Under Railroads Inches
Under 14	0.188	0.250
14 to 16	0.188	0.281
18	0.250	0.312
20	0.250	0.344
22	0.250	0.375
24	0.281	0.406
26	0.281	0.438
28 to 30	0.312	0.469
32	0.312	0.500
34	0.312	0.531
36	0.344	0.531
38 to 42	0.344	0.563

b. Coatings and Linings. The casing pipe shall be cleaned and coated both inside and outside with two (2) coats of coal tar paint, Kippers "Bitumastic Super Service Black", Mobil "High-Build Bituminous Coating 35-J-10", or Tnemec "46-449 Heavy Duty Black".

c. Joints. All joints in steel pipe casings shall be field welded to conform to API 1104 or AWWA C206.

d. Casing Installation. The casing shall be installed by jacking into place . Earth displaced by the conduit shall be removed through the interior of the conduit by hand, by auger, or by other acceptable means. Sections of the casing pipe shall be welded together to form a continuous conduit capable of resisting all stresses, including jacking stresses. The casing pipe conduit in its final position shall be straight and true in alignment and grade, as required on the drawings. There shall be no space between the earth and the outside of the casing.

e. Casing spacers. Type 1 or Type 2 casing spacers shall be used in bores where sanitary sewer pipe is 15 inches in diameter and smaller, length of bore is 250 linear feet or less.

Type 2 casing spacers shall be used in bores where the sanitary sewer pipe diameter is larger than 15 inches or longer than 250 linear feet.

1. Type 1 Casing Spacers. Casing spacers shall be non-metallic, molded in segments for field assembly without any special tools. The casing spacers shall have minimum compression strength of 3,000 psi and minimum impact strength of 1.5 ft-lbs/inch. The casing spacers shall have full length, integrally molded skids designed to provide a minimum of 0.75 inches of clearance between the carrier pipe's greatest outside diameter and the casing pipe's inside diameter. The skids shall be beveled with high abrasion resistance and a low friction coefficient. Metal, Type 304 (18-8) stainless steel bolts may be used to secure the segments together. Acceptable manufactures and models are: PSI Ranger II, Advance Products & System Model CI.

2. Type 2 Casing Spacers. The casing spacers shall have a bolt on shell made in two (2) sections. All metal components shall be Type 304 (18-8) Stainless Steel. It shall have an elastomeric liner to isolate the shell from the carrier pipe. It shall have runners attached to the shell and be designed to provide a minimum of 0.75 inches clearance between the carrier pipe's greatest outside diameter and the casing pipe's inside diameter. The chock runners shall be beveled with high abrasion resistance and a low friction coefficient. Acceptable manufacturers and models are: PSI S8G-2 and PSI S12G-2, Power Seal #4810, Cascade CCS series and Advance Products & Systems Model SSI.

f. End Seals. Both ends of each tunnel liner shall be closed seamless pull-on-type synthetic rubber end seals. The end seals shall be secured to the casing and carrier pipe with T-304 stainless steel banding straps with a 100% non-magnetic worm gear mechanism. The end seal installation shall not require any special tools. Acceptable manufacturers and models are: Advance Products & Systems Models AC & AM, PSI Models C & S.

g. Boring and Jacking Pipe. After dewatering as required, the casing pipe shall be installed by boring and simultaneously jacking the pipe in place. There shall be no annular space between the outside of the casing pipe and the undisturbed earth. If necessary to reduce friction and ensure that the entire length of casing pipe can be jacked in place, bentonite slurry or a suitable chemical gel shall be pumped to the head of the bore to lubricate the exterior casing pipe walls.

500.20. Stream Crossings.

a. Cover Depth. The top of all sewers entering or crossing streams shall be at a sufficient depth below the natural bottom of the stream bed to protect the sewer line. In general, the following cover requirements must be met:

1. One foot (1') (0.3 m) of cover is required where the sewer is located in rock;
2. Three feet (3') (0.9 m) of cover is required in other material. In major streams, more than three feet (3') (0.9 m) of cover may be required;
3. In paved stream channels, the top of the sewer line should be placed below the bottom of the channel pavement; and
4. Less cover will be approved only if the proposed sewer crossing will not interfere with future modifications to the stream channel. Justification for requesting less cover shall be provided to the Engineer.

b. Structures. The sewer outfalls, headwalls, manholes, gateboxes, or other structures shall be located as not to interfere with the free discharge of flood flows of a stream.

c. Materials. Sewers entering or crossing streams shall be constructed of ductile iron pipe with mechanical joints; otherwise, they shall be constructed so they will remain watertight and free from changes in alignment. Material used to backfill the trench shall be stone, coarse aggregate, washed gravel or other materials which will not readily erode, cause siltation, damage pipe during placement, or corrode the pipe.

d. Aerial Crossings. Aerial crossings will be considered on a case-by-case basis and if approved by the City shall meet the following requirements:

1. Support shall be provided for all joints in pipes utilized for aerial crossings. The supports shall be designed to prevent frost heave, overturning, and settlement.
2. Precautions against freezing, such as insulation and increased slope, shall be provided. Expansion jointing shall be provided between above-ground and below-ground sewers. Where buried sewers change to aerial sewers, special construction techniques shall be used to minimize frost heaving.
3. For aerial crossings, the impact of flood waters and debris shall be considered. The bottom of the pipe should be placed no lower than the elevation of the fifty (50)-year flood.
4. Aerial crossings shall be constructed of ductile iron pipe with mechanical joints; otherwise, they shall be constructed so that they will remain watertight and free from changes in alignment or grade.

500.21. Drainage Maintenance. Trenches across roadways, driveways, walks, or other trafficways adjacent to drainage ditches or water courses shall not be backfilled prior to completion of backfilling the trench on the upstream side of the trafficway, to prevent impounding water after the pipe has been laid. Bridges and other temporary structures required to maintain traffic across such unfilled trenches shall be constructed and maintained by the Contractor. Backfilling shall be done so that water will not accumulate in unfilled or partially filled trenches. All material deposited in roadway ditches or other water courses crossed by the line of trench shall be removed immediately after backfilling is completed and the original section, grades, and contours of ditches or water courses shall be restored. Surface drainage shall not be obstructed longer than necessary.

500.22. Protection of Trench Backfill in Drainage Courses. Where trenches are constructed in ditches or other water courses, backfill shall be protected from surface erosion. Where the grade of the ditch exceeds one (1) percent, ditch checks shall be installed. Unless otherwise indicated on the drawings, ditch checks shall be concrete. Ditch checks shall extend not less than 2 feet below the original ditch or water course bottom for the full bottom width and at least 18 inches into the side slopes and shall be at least 12 inches thick.

500.23. Disposal of Excess Excavated Materials. Insofar as needed, suitable excess excavated materials shall be used in fills and embankments indicated on the drawings. Except as otherwise permitted, all excess excavated materials shall be disposed of away from the site of the work.

Broken concrete and other debris resulting from pavement or sidewalk removal, excavated rock in excess of the amount permitted to be and actually installed in trench backfill, junk, and debris encountered in excavation work and other similar waste materials shall be disposed of away from the site of the work.

Earth from excavations located in unimproved property shall be distributed directly over the pipe trench and within the pipeline right-of-way in such a way that the finish grade of the replaced topsoil will be 6 inches above the original ground surface elevation at and across the trench and sloping uniformly each way. Material thus distributed shall be carefully finished with a drag, blade machine, or other suitable tool to a smooth, uniform surface without obstructing drainage at any point. At previous natural drainage ways crossing the sewer alignment, the mounded finish grade shall be sloped to form a drainage swale suitable to allow runoff to drain and shall not cause ponding. Placement of excavated material in the above manner will not be permitted where the line of trench crosses or is within a public road or highway right-of-way.

The disposal of waste and excess excavated materials, including hauling, handling, grading, and surfacing shall be a subsidiary obligation of the Contractor and no separate payment will be made there for.

500.24. Settlement. The Contractor shall be responsible for all settlement of backfill, fills, and embankments which may occur within the correction period stipulated in the General Requirements Section 5.9.

The Contractor shall make, or cause to be made, all repairs or replacements, including reseeding or resodding as required, made necessary by settlement within 30 days after notice from Engineer or Owner.

500.25. Erosion Control. To prevent erosion of creek banks at points where the sewer crosses, the removal of trees and vegetation along the creek banks shall be minimized.

At each creek crossing, where indicated on the plans, a one-foot high and 4-foot wide berm shall be constructed adjacent and parallel to the top of each bank, so runoff will flow along the berm and be deflected to undisturbed vegetated areas before entering the creek.

At each creek crossing, where indicated on the plans, the restored creek bank shall be protected by 2 feet of riprap on top of 6 inches of filter blanket rock which shall be placed on top of a 4-foot thick ground water barrier. The riprap and filter blanket rock shall cover an area from the bottom of the channel to the top of the berm and extend 5 feet into undisturbed earth on each side. The ground water barrier shall cover an area from the bottom of the sewer trench to the top of the berm for the full trench width.

a. Materials. The material for riprap shall consist of a predominantly one-sized, durable stone, shot rock or broken concrete. Acceptance by the engineer may be made by visual inspection. Riprap material shall be either Type 1, or 2, per below.

   Type 1 Riprap shall consist of at least 40 percent of the mass being pieces having a volume of one cubic foot or more.

   Type 2 Riprap shall consist of at least 60 percent of the mass being pieces having a volume of one cubic foot or more.

A geotextile material shall separate the subgrade from the riprap. Geotextile material shall be AASHTO M288-96 Class 2 with a minimum permittivity of 1.0 sec^{-1} and an apparent opening size of 0.22 mm MARV. Lap seams per manufacturers recommendations.

Riprap shall be placed to the approximate shape and thickness shown on the plans for the specified ditch or as directed by the Engineer. The rock shall be dumped on a subgrade of reasonably uniform density and left in a rough condition meeting the approval from the Engineer.

Grouted riprap shall not be allowed unless approved by the Engineer.

a. Filter Blanket Rock. The material shall be durable and may be either crushed stone or gravel of a combination of both. The rock shall be reasonably well graded with a maximum size of 4 inches in diameter and an average size of one inch in diameter.

b. Placement. The ground water barrier shall be placed and compacted in one-foot layers for the total thickness below the filter blanket rock. The geotextile is to be placed on top of grade. The filter blanket rock shall be carefully dumped in place so as to prevent damage to the filter blanket layer. The completed riprap shall form a uniform 2 foot thick layer with a tight surface. Each layer need not be compacted, but shall be graded in a manner to ensure that the larger fragments are uniformly distributed and that the smaller fragments serve to fill the voids between the larger fragments. Hand placement of fragments or compaction will be required only to the

extent necessary to obtain the required results. A trench at the toe of the slope shall be excavated to the depth shown on the plans, or to a depth of 2 feet if not otherwise shown on the plans.

All costs in connection with erosion control, including ground water barrier, filter blanket, and riprap shall be included in the cost of sewer pipe in place.

c. Ground Water Barrier. Ground water barriers shall impede passage of water through the pipe embedment material. Barrier material shall meet soil classification GC, SC, CL, or ML-CL, and shall be compacted to 95% of maximum density. Material may be finely divided suitable job excavated material, free from stones, organic matter and debris. Ground water barriers shall be compacted soil the full depth of granular material plus 1 foot above the granular material, the full trench width, at least 4 feet long with a minimum depth of 4 feet.

d. Stream Crossing Cleanup. Cleanup of stream crossings shall begin immediately after sewer construction and backfilling can be completed. Exposed disturbed areas in stream crossings shall not remain unprotected for more than seven (7) days.

500.26. Cleanup Work. The Contractor shall provide sufficient labor forces and equipment to maintain cleanup operations closely behind pipe laying operations. Every advantage shall be taken of periods of good weather for general cleanup, grading, topsoiling, seeding, sodding, etc. Items of work such as manhole construction, road cuts, pavement replacement, and all other restoration work shall not be allowed to lag behind the pipe installation. Special attention shall be given to maintaining road crossings. Streets to be opened to local traffic at the end of the day's operation shall be cleaned of dirt and mud. Streets which are not open to traffic shall be cleaned regularly to be kept free of dirt and mud. Street sweeping equipment shall capture and contain dust and debris. Powered broom attachments shall be of the pick-up type. All equipment and material stockpiles shall be secured for safe passage of vehicles and pedestrians. Traffic control in conformance with the Manual of Uniform Traffic Control Devices shall be in place prior to opening the road to traffic.

All temporary pavement patches must be kept flush with adjacent paved surfaces between asphalt paving seasons. Ruts and other depressions caused by settling, vehicular traffic, etc., shall be continuously filled and graded for maintenance of a smooth traveled surface and minimum inconvenience to the public. All material stockpiles shall be secured for safe passage of vehicles and pedestrians. If, in the opinion of the Engineer, cleanup and miscellaneous items of work and construction are allowed to lag, the Contractor will be required to stop pipe installation until such work is caught up.

A percentage of the unit and lump sum prices will be withheld from payments for pipe installation, manhole construction, etc., in areas where cleanup and restoration have not been completed. This percentage will be in excess of the specified 10% retained for completed work.

SECTION 505

SANITARY SEWER PIPE

505.1. Description. This section covers sanitary sewer pipe and fittings to be furnished complete with all jointing materials and appurtenances.

Pipe shall be installed and tested in accordance with Section 515 - Sewer Pipe Installation and Testing.

505.2. Materials for Public Sewer Lines. Pipe and fittings, jointing materials, and appurtenant materials shall be shown on the drawings and as specified herein.

a. PVC PIPE - PVC pipe and fittings shall be permitted for sewers up to 27 inches in diameter. The use of PVC pipe for sewers larger than 27 inches in diameter will be considered on a case by case basis. PVC pipe shall meet either the sewer pipe specifications or the pressure pipe specifications listed below depending upon the depth of sewer installed.

1. Gravity Sewers Up to 15 Feet Deep. At a minimum the gravity sewer pipe shall be SDR 35 PVC. Pipe up to 15 inches in diameter shall conform to ASTM D-3034. Pipe with a diameter 18 inches or larger shall conform to ASTM F-679. The use of pipe conforming to ASTM F-794 and ASTM F-1803 will be considered on a case by case basis for pipe sizes 12 inches to 27 inches in diameter. Joints shall comply with the specifications below. Pipe embedment and backfill shall be in accordance with the Pipe Embedment Standard Detail 540.01 and 540.02.

2. Gravity Sewers Between 15 Feet but Less Than 30 Feet Deep. At a minimum the gravity sewer pipe shall be SDR 26 heavy wall gravity sewer pipe. Pipe up to 15 inches shall conform to ASTM D-3034 (latest revision). Pipe with a diameter 18 inches or larger shall have a minimum stiffness of 115 psi and conform to ASTM F-679 (latest revision)

   PVC pressure rated pipe shall be permitted as follows. PVC pipe shall meet AWWA C-900, or AWWA C-909, or AWWA C-905, or ASTM D-2241 SDR-26.

   Joints shall comply with the specifications below. Pipe embedment and backfill shall be in accordance with the Pipe Embedment Standard Detail 540.01 and 540.02.

3. For Gravity Sewers Installed Deeper Than 30 Feet Deep. Gravity sewers installed deeper than 30 feet deep shall only be approved on a case by case basis.

Jointing Materials

Ordinary joints	ASTM D3212, integral bell punch-on type elastomeric gasket joints
Field cut joints and connections to other piping materials	Can-Tex "C-T Adapters"; Dickey "Plastic Pipe Adapters"; "Flexible Couplings"; Mission "Eastern Standard Band-Seal Couplings" with stainless steel shear rings; Nashua Pre-Cast Corporation "Flex-O-Joint," "Mega Lug"; or equal Fernco "PVC Donuts" by approval of Engineer only.

b. Ductile iron pipe (DIP). DIP shall be used for sanitary sewer in areas where the minimum 36 inches of cover over the top of pipe cannot be met, under creek crossings, deep gravity sewer applications, or as specified on the Contract plans. Pipe embedment and backfill shall be in accordance with the Pipe Embedment Standard Detail 540.01 and 540.02.

Pipe	Ductile iron, ANSI A21.51; ASTM A536, Grade 60-42-10; thickness, class 52
Fittings	
Material	Gray iron, ANSI A21.10. 250 psi pressure rating, except shorter laying lengths will be acceptable or ductile iron, ASTM A536, Grade 80-60-03 or 70-50-05, ANSI A21.10, 350 psi pressure rating All gasketed fittings 4" throught 15" must be injection-molded and comply with the ASTM D3034 and F1336 standards and must be certified by a third prty testing agency to an industry standard.
Push-on Joints	ANSI A21.11, except gaskets shall be neoprene or other synthetic rubber. Natural rubber will not be acceptable
Flanged Joints	ANSI A21.15
Flanges	ANSI B16.1, 125 lb or U.S. Pipe "Flange-Tyte"
Bolts	ASTM A 307, chamfered or rounded ends projecting 1/4 to 1/2 inch beyond outer face of nut
Nuts	ASTM A307, Hexagonal, ANSI B18.2, heavy semi finished pattern
Gaskets	ASTM D1330, Grade I rubber, ring type, 1/8-inch thick; or U.S. Pipe "Flange-Tyte", 1/8-inch thick
Mechanical Joints	ANSI A21.11
	Mechanical joint with waterstop and tapped holes, single

Wall Castings	casting or fabricated cast iron Midwest Pipe Fabricators "Adjustable Wall Pipe." All holes shall be plugged with plastic plugs.
Plastic Plugs	Protective Closures "Caplug Series WW"
Mechanical Joints with Tie Rods	
Tie Rods	ASTM A307
Steel Pipe	ASTM A210, standard weight
Washers	ANSI B27.2, plain steel
Mechanical Couplings	
Couplings	Dresser Style 38 or Rockwell/Smith-Blair 441 or 411 Flexible Coupling; without pipe stop
Gaskets	Oil-resistant synthetic rubber
Shop Coating and Lining	
Cement Lining	ANSI A21.4
Bituminous Coating	Manufacturer's standard
Rust-Preventative Compound	Houghton "Rust Veto 344" or Rush-Oleum "R9"
Field Coating	Heavy coal tar paint, MIL-C-18480; Koppers "Bitumastic No. 50", or Mobil "35-J-10 Hi-Build Bituminous Coating"

c. Reinforced Concrete Pipe (RCP). RCP shall be permitted for gravity sewers with a diameter of 30 inches and larger. RCP shall confirm to ASTM C76 (latest revision) Class III, Wall B. Pipe embedment and backfill shall be in accordance with the Pipe Embedment Standard Detail 540.01 and 540.02

1. Joints ASTM C361, Bell and Spigot compressive type with resilient seals embedded in both ends and joined with O Ring rubber gaskets.

2. All rubber and rings shall be extruded or molded and cured in such a manner that any cross section will be dense, homogeneous, and free of porosity, blisters, pitting and other imperfections. The basic polymer shall be EPDM hydrocarbon. The compound shall conform to the following requirements:
The rubber EPDM material shall meet ASTM C-443 with the exception of the 40-60 duro hardness.
For resilient interlocked end seals the hardness duro A shall be 40 to 70 $\pm$ 5.

3. Each concrete pipe section shall be tested at the site with low pressure air or equivalent vacuum test. The test shall be conducted in a manner using a cap, plug and gasket of the type and size to be used in the field to include the tongue and bell sealing surface. End to end testing using foam plates is not acceptable. Pipe passing the test shall be clearly marked "Air Tested."

505.3. Materials for Private Service Laterals. Pipe and fittings, jointing materials, and appurtenant materials shall be shown on the drawings and as specified herein. Private service laterals shall be a minimum of 4 inches in diameter.

a. Pipe and fittings for private service laterals that connect to the public sewer main at a depth of 15 feet or less shall at a minimum be SDR 35 solid wall PVC sewer pipe and shall conform to ASTM D-3034.

b. Pipe and fittings for private service laterals that connect to the public sewer main at a depth deeper than 15 feet but less than 20 feet shall at a minimum be SDR 26 heavy wall PVC gravity sewer pipe and conform to ASTM D-3034.

c. Private service laterals shall not be connected to public sewers deeper than 20 feet.

d. Service connections shall not be within five (5) feet of a manhole or lamphole (cleanout) or directly into a lamphole (cleanout).

e. Individual service connections shall be separated horizontally by a minimum of two (2) feet.

f. Service connections shall not be connected to a manhole. Food service establishments may connect directly to a manhole with written permission from the City of Columbia; however, these will be approved on a case by case basis.

g. PVC hub to conform to ASTM Specification D-3034 (latest revision).Rubber sleeve and gasket shall conform to ASTM Specification F477 (latest revision).

505.3. Manhole Connections. The Contractor shall use precast manhole base sections with integral circular flexible gasket as specified in the sewer manholes section of these specifications, plain end pipe shall be installed through the gasket in accordance with the manufacturer's instructions.

When a new sewer line is being connected to an existing manhole the invert is to be modified by acceptable methods of adding or removing concrete to ensure an acceptable amount of fall (0.2'-1.5') through the manhole.

505.4. Drawings and Data. Drawings and data shall be submitted in accordance with the submittals section. Drawings and data shall include but not limited to the following:

Details of joints
Gasket material
Pipe length
Certification

505.5. Affidavit of Compliance. An affidavit shall be submitted to the Engineer certifying that pipe, fittings, and jointing materials are in compliance with the governing standards and specifications.

SECTION 506

SEWER LATERAL MARKING

506.1. General. When new lateral sewer pipes are installed and connected to an underground facility within the public right-of-way, or if such lateral is fully replaced by excavation within the public right-of-way, the Contractor shall be required to place tracer wire and an access point within a protective enclosure or cleanout for gravity sewer laterals. For sewer laterals operating under pressure or vacuum, the contractor shall be required to place an access point within a protective enclosure and shall not be required to place a cleanout. All protective enclosures and cleanouts shall be extended to grade and installed so that it is easily accessible.

506.2. Material

a. Tracer Wire. A green-coated No. 12 AWG copper clad steel tracer wire intended for direct bury, with minimum 30 mil HDPE insulation thickness, shall be installed the entire length of proposed sewer laterals as per the Standard Detail 12A & 13. For open cut trench, the tracer wire shall have a minimum break load of 450 lb. For boring, the tracer wire shall have a minimum break load of 1,150 lb. Tracer wire shall be terminated at an approved test station box as specified and be accessible from the surface.

b. Test Station Box. The tracer wire test station box shall be suitable for underground installation and constructed as per the Standard Detail 12A. Test station boxes shall be appropriately identified with a locking cast iron cover that is color coded green per APWA standards. Tracer wire test station boxes shall be manufactured by Copperhead Industries, LLC or approved equal and installed as per manufacturer's recommendations.

1. Light Traffic Areas- SnakePit #LD14GTP, or equal
2. Concrete/Driveway- SnakePit #CD14GTP, or equal
3. New Construction – SnakePit #LD14GTP-ADJ, or equal

c. Grounding. Tracer wire must be properly grounded at all dead ends/stubs. Grounding of tracer wire shall be achieved by use of a grounding anode specifically manufactured for this purpose. The anode shall be a drive in 1.5 lb bare magnesium anode. The 1.315" diameter anodes shall be connected to the green No. 12 AWG copper clad steel (ccs) wire and buried at the same elevation as the utility.

d. Connectors. Connectors shall be designed to seal out moisture and corrosion and be specifically manufactured for use in underground trace wire installation. Non locking friction fit, twist on or taped connectors are prohibited. Connectors shall be manufactured by Copperhead Industries, LLC, or approved equal.

506.3. Installation

a. The No. 12 insulated wire shall be placed along the top of the sewer lateral and taped in place with electrical tape at base of riser, sewer main, and 6' intervals in

between. Caution must be exercised in the initial backfilling not to move or damage the locater wire.

b. Permanent access points shall be provided through test station boxes or other approved methods located directly above the utility and set to grade.

   1. Service Laterals on developed property. Tracer wire must terminate at an approved tracer wire test station box set to existing grade, located a maximum of 2' outside public right-of-way or easement, and out of the roadway.

   2. Service Laterals for new construction. Tracer wire must terminate at an approved tracer wire test station box extended 1' above the proposed final grade, located a maximum of 2'outside public right-of-way or easement.

c. Tracer wire systems must be installed as a single continuous wire, except where using approved connectors. No looping or coiling of wire is allowed. Where splices become necessary outside of access boxes, the splices shall be made using corrosion proof/filled wire connectors.

d. All tracer wire shall be tested for continuity prior to approval of the lateral by the City. Tracer wire installation shall be performed in such a manner that allows proper access for connection of line tracing equipment, proper locating of wire without loss or deterioration of low frequency (512Hz) signal for distances in excess of 1,000 linear feet, and without distortion of signal caused by multiple wires being installed in close proximity to one another.

e. Any damage occurring during installation of the tracer wire must be immediately repaired by removing the damaged wire, and installing a new section of wire with approved connectors. Taping and/or spray coating shall not be allowed.

SECTION 510

SEWER MANHOLES

510.1. Description. This section covers standard and drop manholes. Manholes shall be constructed complete with covers, steps, vents, fittings, and other appurtenances, in accordance with the details and these specifications.

All doghouse manholes, inside drop manholes or any other material or construction practice that is not covered on the construction plans or these specifications shall request a variance in writing to the Sanitary Sewer Engineer of the City of Columbia. Such changes, as are authorized under this provision, shall be made without additional cost to the City of Columbia. The City of Columbia reserves the right to receive an equitable adjustment in contract price or contract time as a consideration for authorizing such change.

All standard and drop manholes shall be constructed of precast concrete sections. Only concentric precast concrete cones will be acceptable. When flat top manholes are used, the frame casting shall be cast into the center of the manhole top.

Only manholes which are required to have outside pipe and fittings for dropping wastewater into the lower line will be designated as drop manholes.

510.2. Materials.

Concrete	Materials, handling, forms, finishing, curing, and other work as specified in concrete section, except that only calcareous materials shall be used. Granitic materials shall not be used.
Precast Section	Circular precast concrete; ASTM C478, except as modified
Minimum Barrel Diameter	48" for pipe diameters less than 24" 60" for pipe diameters of 24" to 36"
Minimum Wall Thickness	5" minimum
Reinforcement	As indicated on the Standards
Portland Cement	ASTM C150
Hydrated Lime	ASTM C207, Type S
Sand	Concrete sand (fine aggregate) sieved through 8 mesh screen
Shrinkage-Correcting Aggregate	Master Builders "Embeco", Sika "Kemox", Sonneborn "Ferrolith G-DS", or equal
Mortar	One part Portland cement, 1/2 part hydrated lime, 3

	parts sand
Non-shrinking Mortar	Premixed or job mixed; job mixed shall be one part shrinkage-correcting aggregate, one part Portland cement, one part sand
Gaskets	
Mastic	Fed Spec SS-S-210; K.T. Snyder "Ram-Nek", Hamilton-Kent "Kent-Seal No. 2" Bidco "C-56", Conseal "CS-102" or equal
Rubber	Neoprene or other synthetic, 40 (plus or minus 5) hardness when measured by ASTM D2240, Type A durometer
Coal Tar Paint	Koppers "Bitumastic Super-Service Black", Polyguard "CA-14 Coating", Tnemec "46-449 Heavy Duty Black", or equal
Castings	Manhole and cleanout castings shall conform to ASTM A48, class 35 B. Manhole and cleanout casting dimensions shall conform to the Standard Details. Manhole lid shall have a minimum weight of 135 lbs +/- 5%. Manhole lid plus manhole frame shall have a total minimum weight of 350 lbs +/- 5%. Cleanout lid plus cleanout frame shall have a total minimum weight of 90 lbs +/- 5%.
Sealing System	Infi-Shield Uni Band or approved equal
Joint Sealant	Infi-Shield Seal Wrap or approved equal. Seal wrap to be made of high quality EPDM rubber. EPDM shall meet ASTM D2240, D412, D395, and D634
Steps	American ML-10-NCR or approved equal
Corrosion Protection	Citadel Technologies Inc. SLS-30, Raven 405 High-Build Epoxy or approved equal

510.3. Precast Concrete Sections. Precast sections shall conform in all respects to applicable requirements of Details of Standard Manholes as indicated in the standard details and shall contain reinforcing steel as required to prevent cracking during handling.

a. Delivery. Precast concrete sections shall not be delivered to the job until representative concrete cylinders have attained strength of at last 80% of the specified minimum.

b. Handling. Precast concrete sections shall be handled carefully and shall not be bumped or dropped. Hooks shall not be permitted to come in contact with joint surfaces. Use of lifting holes will not be permitted. Lift notches that are not deeper than one half of the wall thickness will be allowed. Lifting notches shall be repaired by cementing a properly shaped concrete plug in place with epoxy cement, or by other methods acceptable to the Engineer.

c. Inspection. Precast concrete sections shall be inspected when delivered and all cracked or otherwise visibly defective units rejected.

510.4. Precast Concrete Base. The requirements of precast concrete sections shall apply to precast concrete bases. Precast bases shall be furnished with "A-Lok" continuous flexible gaskets for connecting piping. Part of the concrete invert fill may be furnished with the precast unit; however, a rough surface must be provided to improve bond with the final invert fill. At least the top 2 inches of the concrete invert fill must be installed in the field and shall conform exactly to the invert elevations of the connecting piping after installations. Surface shall be free of all dust, deleterious matter, and moisture prior to placing fill.

The connecting pipe shall be plain end, bevel cut spigots and shall not protrude more than 1 inch inside the manhole wall. A clear distance of at least 1 inch from the end of each connecting pipe and around the pipe shall be provided when the concrete invert fill is installed. This shall be provided under the pipe by a boxout with sides which are at right angles with each other. After completion of the manhole, the boxout shall be filled with suitable asphalt or mastic material, completely filling the space beneath the pipe and extending to at least the springline. The asphalt or mastic fill material shall provide a smooth, uniform surface between the inside diameter of the pipe and the manhole invert.

As shown on the plan or in extenuating circumstance where it is not possible to use "A-Lok" or approved equal continuous flexible gaskets and with the approval of the Engineer, precast bases may be furnished with suitable horseshoe shaped or circular boxouts with roughened or grooved surface to improve mortar bond for connecting piping, the space between connecting pipes and the wall or precast sections shall be completely filled with non-shrinking mortar.

When precast manhole sections with horseshoe shaped boxouts are used, the following items shall apply:

a. For PVC. Pipe water stops as recommended or supplied by the pipe manufacturer shall be installed at the center of the manhole walls and grouted in place as specified in Section 510 - Sewer Manholes.

b. For VCP and DIP. Pipe shall be flush at manhole walls and grouted in place as specified in Section 510 - Sewer Manholes.

510.5 Cast-in-Place Concrete Bases. Cast-in-place concrete manhole bases shall be allowed when it is required to construct a new manhole over an existing sanitary sewer line as shown on the Doghouse Manhole Standard Detail. When a cast-in-place concrete base is utilized the remainder of the manhole shall consist of precast manhole sections. When precast manhole sections with horseshoe shaped boxouts are used, 510.4 a. and 510.4 b. shall apply. The cast-in-place concrete base shall be constructed in accordance with the Doghouse Manhole Standard Detail.

510.6. Construction. All mortar shall be used within 40 minutes after mixing. Mortar which has begun to take initial set shall be discarded and shall not be mixed with additional cement or new mortar.

In no case shall the invert section through a manhole be greater than that of the outgoing pipe. The shape of the invert shall conform exactly to the lower half of the pipe it connects. Side branches shall be connected with as large radius of curve as practicable. All inverts shall be troweled to a smooth clean surface.

Circular precast sections shall be provided with a rubber or mastic gasket to seal joints between sections. Where mastic gaskets are furnished, the written installation recommendations of the manufacturer shall be available at the site of the work, and shall be strictly followed. For manhole risers, mastic gaskets with a nominal cross section as shown in the following table shall be furnished unless a different cross section is recommended in writing by the manufacturer.

Minimum Manholes Diameter (inches)	Nominal Cross Section (inches)
48	1 x 3
60	1 x 3
72	1 x 3-1/2

510.7. Bench. A bench shall be provided on each side of any manhole channel when the pipe diameter(s) are less than the manhole diameter. The bench should be sloped no less than a one-half inch per foot (0.5in/ft). No pipe shall discharge onto the surface of the bench.

510.8. Damproofing. The outside surfaces of each manhole shall be painted with one heavy coat of coal tar paint. Surfaces to receive paint shall be dry. Damproofing may be applied to precast units in the shop. If the shop coating is damaged during construction, a touch-up coat of paint as required shall be applied and allowed to dry prior to backfilling.

Where manholes are required to extend above finish grade, damproofing shall be terminated 6 inches below the finish grade line. All exposed surfaces of manholes above grades shall be plain concrete.

510.9. Corrosion Protection. Where corrosive conditions due to septicity or other causes are anticipated, corrosion protection on the interior of the manholes shall be provided as specified

510.10. Shallow Manholes. Shallow manholes shall conform in all respects to the applicable requirements of Standard Shallow Manhole Standard Detail.

510.11. Drop Manholes. Drop manholes shall conform in all respects to the applicable requirements of Standard Drop Manhole Standard Detail. Drop connections must not enter the manhole at a joint.

510.12. Drawings and Data. Drawings and data covering precast concrete sections or cast-in-place concrete manholes shall be submitted in accordance with the submittals section.

510.13 Manhole Seals.

a. Each manhole joint shall be sealed with a 6 inch wide external rubber sleeve similar to the Infi-Shield Seal GatorWrap as manufactured by Sealing Systems, Inc, or approved equal. The seal shall be made of a Stretchable, Self-Shrinking, Intra-Curing Halogenated Based Rubber with a minimum thickness of 30 mils. The entire back side of each seal wrap shall be coated with mastic. The mastic shall be non-hardening butyl rubber sealant, with a minimum thickness of 30 mils. The seal shall be designed to stretch around the substrate then overlapped creating a cross link and fused bond between the rubber and butyl adhesive. The application shall form a continuous rubber seal that applies inward pressure on the protected area for the life of application. The butyl adhesive and the inward pressure exerted on the substrate shall prevent the intrusion of water and soil through the joint sections of the manhole. This seal shall be provided in addition to the joint sealing requirements outlined in the Standard Specifications.

b. Each manhole casting shall be sealed to the manhole with an external sealing system similar to the Infi-Shield Uni-Band as manufactured by Sealing Systems Inc, or Riser-Wrap as manufactured by PSI, Inc or approved equal. The seal shall be a continuous band of EPDM (Ethylene Propylene Diene Monomer) rubber with a minimum thickness of 65 mils or high density polyethylene membrane with a minimum thickness of 2.5 mm. Prior to placement of the wrap system, the surfaces shall be coated with a primer capable of enhancing the mastic adhesion. The prime coat shall cover the entire surface area where the mastic is intended to adhere. The external sealing system shall be installed according to the manufacturer's recommendations. The external seal shall be extended onto the casting and the cone section a minimum of 2 inches. This requirement shall not apply to "Flat-Top" manholes where the frame is cast into the manhole lid.

510.14. Manhole Rings and Covers. The rings and covers of all manholes shall be set at the elevation shown on the drawings and solidly built into place. Concrete rings shall be grouted with cement mortar.

Plastic adjusting rings shall be injection molded recycled HDPE as manufactured by LADTECH, Inc. or approved equal and installed as per manufacturer's recommendations

The manhole adjusting rings shall be molded from high density polyethylene as defined in ASTM Specification D-4976. The annular space between the rings and cone basin, the rings, and

cover frame shall be sealed utilizing an approved butyl sealant. The contractor shall utilize flat and sloping units to match the required slope and or grade of the structure

The manhole lids shall clearly have cast into "Sanitary" on the top of the manhole lid. Manhole lids are to be water tight. Manhole covers are to be bolt down type in all floodplains.

SECTION 515

SEWER PIPE INSTALLATION AND TESTING

515.1. Description. This section covers installation and testing of all sewer pipe. Except where modified by specific requirement in this section, the written installation recommendations of the sewer pipe manufacturer shall be strictly followed. Sewer pipe materials are specified in other sections.

515.2. Handling. Pipe fittings and appurtenance shall be transported, stored, and handled in a manner which prevents damage. Hooks shall not be permitted to contact joint surfaces. Plastic pipe shall be shaded if necessary to prevent curvature due to thermal expansion. Damaged pipe shall be removed from the site.

515.3. Cleaning. The interior of all pipe and fittings shall be thoroughly cleaned before installation and shall be kept clean until the work has been accepted. All joint surfaces shall be kept clean until the joint is completed.

Every precaution shall be taken to prevent foreign material from entering the pipe during installation. No debris, tools, clothing, or other materials shall be placed in the pipe.

Whenever pipe laying is stopped, the open end of the pipe shall be closed with a manufacturers cap drilled with holes closely fitting the end of the pipe to keep sand and earth out of the pipe. The cap shall have several small holes near the center to permit water to enter the pipe and prevent flotation in the event of flooding of the trench.

No connection shall be made to the downstream system until the new system has been completed or the Engineer has approved the connection. If the connection is made the low end shall be plugged properly using a manufacturer's cap drilled with holes.

515.4. Alignment. Piping shall be laid to the lines and grades indicated on the drawings.

Laser beam equipment or surveying instruments shall be utilized to determine and maintain proper pipe line and grade. Establish required uniform line and grade in trench from benchmarks identified by the Engineer. Maintain this control for a minimum of 100 feet behind and ahead of pipe-laying operation.

Sewer mains shall be laid at least 10 feet (10') horizontally from any existing or proposed water main. The distances shall be measured edge-to-edge. In cases where it is not practical to maintain a ten-foot (10') separation, a deviation on a case-by-case basis may be allowed, if supported by data from the design engineer. Such a deviation may allow installation of the sewer closer to a water main, provided that the water main is in a separate trench or on an undisturbed earth shelf located on one (1) side of the sewer and at an elevation so the bottom of the water main is at least eighteen inches (18") (46 cm) above the top of the sewer.

Manholes should be located at least ten feet (10') horizontally from any existing or proposed water main.

Curvilinear alignment of sewers larger than twenty-four inches (24") may be considered on a case-by-case basis provided compression joints are specified and ASTM or specific pipe manufacturers' maximum allowable pipe joint deflection limits are not exceeded. Curvilinear sewers shall be limited to simple curves which start and end at manholes. When curvilinear sewers are proposed, the recommended minimum slopes must be increased accordingly to provide a minimum velocity of two feet (2') per second when flowing full.

515.5. Laying Pipe. Lateral displacement of the pipe shall be prevented during embedment operations. Pipe shall not be laid in water, or under unsuitable weather or trench conditions.

Pipe laying shall begin at the lowest elevation with all ends facing the direction of laying except when reverse laying is permitted by the Engineer.

Core holes in concrete pipe shall be repaired by cementing a properly shaped concrete plug in place with epoxy cement or by other methods acceptable to the Engineer.

Vertical clearance between sewer and water mains shall be a minimum of 2 feet. If it is impossible to obtain proper horizontal and vertical separation as described above for sewers, the sewer must be constructed of slip-on or mechanical joint pipe or continuously encased and be pressure tested to one hundred fifty pounds per square inch (150 psi) (1,034 kPa) to assure watertightness.

515.6. Jointing. All joint preparation and jointing operations shall comply with the instructions and recommendations of the pipe manufacturer. Immediately before joints are pushed together, all joint surfaces shall be coated with the lubricant furnished with the pipe. The position and condition of each rubber gasket (unbonded gaskets) shall be checked with a feeler after the joint is completed.

515.7. Concrete Encasement. Concrete encasement shall be installed where and as shown on the drawings. Concrete and reinforcing steel shall be as specified in the Section 250 – Concrete Structures. All pipe which is to be encased shall be suitably supported and blocked in proper position and shall be anchored against flotation.

515.8. Acceptance Tests. Each manhole and reach of sewer shall meet the requirements of the following acceptance tests. All defects shall be repaired to the satisfaction of the Engineer. Contractor shall furnish, at no additional cost to the owner, all necessary equipment and appurtenances to perform the acceptance tests.

a. Lamping. Unless otherwise indicated on the drawings or directed by the Engineer, each section of sewer line between manholes shall be straight and uniformly graded. The Engineer may lamp any or all sections of sewer line at his discretion. The Contractor shall furnish suitable equipment and assistants to help the Engineer.

b. Air Testing. An air test shall be conducted on each reach of sewer pipe between manholes or structures. For each type of pipe to be installed in the work, the first line between manholes or structures shall be tested before backfilling and before

any sewer pipe is installed in the remainder of the work. Thereafter, air testing shall be done after backfilling and individual or multiple reaches may be tested at the option of the Contractor. Air testing shall be used for all types of pipe except large diameter pipes where air testing is not practical. Air testing shall comply with ASTM C828 F1417, C924, C1103, depending on size and type of sewer pipe installed.

Leakage shall not exceed 0.0015 cfm per square foot of internal pipe wall at an average pressure of 3 psi greater than groundwater back pressure. The time elapsed for a one psi drop in air pressure shall not be less than:

$t = 0.944d$; where: t = time in minutes
d = pipe in diameter in inches

Leaks shall be located by air testing short sections of pipe. Leaks shall be repaired and the reach of sewer retested.

c. Exfiltration. Exfiltration tests are not an acceptable acceptance test for manholes. An exfiltration test may be used in lieu of air testing for large diameter sewer pipe where air testing is not practical. Exfiltration tests shall be conducted by blocking off all manhole or structure openings, except those connecting with the reach being tested, fill the line, and measuring the water required to maintain a constant level in the manholes or structures.

During the exfiltration test, the average water level in the manholes or structures shall be at least at the elevation of the ground surface. The maximum depth at the lower end shall not exceed 25 feet, and the minimum depth at the upper end shall be at least 5 feet above the crown of the pipe or 5 feet above the ground water elevation, whichever is higher.

The total exfiltration shall not exceed 100 gallons per inch of nominal diameter per mile of pipe per day for each reach tested. For purposes of determining maximum allowable leakage, manholes shall be considered sections of 48 inch pipe. The exfiltration tests shall be maintained on each reach for at least 2 hours and as much longer as necessary, in the opinion of the Engineer, to locate all leaks.

The Contractor shall provide, at his own expense, all necessary piping between the reach to be tested and the source of water supply, together with equipment and materials required for the tests. The methods used and the time of conducting exfiltration tests shall be acceptable to the Engineer.

d. Infiltration. If at any time prior to expiration of the correction period stipulated in the General Conditions infiltration exceeds 100 gallons per inch of nominal diameter per mile of sewer per day, the Contractor shall locate the leaks and make repairs as necessary to control the infiltration.

e. Deflection. Not less than 30 days after backfilling is complete, and prior to acceptance of the work, all flexible pipe shall be tested, by the use of a mandrel or

other approved device, to insure that no pipe deflection has occurred greater than five (5) percent of the inside diameter of the pipe. These tests shall be performed without mechanical pulling devices and without additional cost to the Owner. Pipe with a deflection exceeding five (5) percent of the inside diameter shall be uncovered, and the bedding and backfill replaced to prevent excessive deflection. Repaired pipe shall be retested. Ductile iron pipe will not require a deflection test unless otherwise noted on the plans or specifications.

The rigid ball or mandrel used for the deflection test shall have a diameter not less than ninety-five percent (95%) of the base inside diameter or average inside diameter of the pipe depending on which is specified in the ASTM specification, including the appendix, to which the pipe is manufactured. The test shall be performed without mechanical pulling devices. A mandrel must have nine (9) or more odd number of flutes or points.

f. Vacuum Test. A vacuum test shall be performed on each manhole to assure water-tightness in accordance with the following procedures:

1. Each manhole shall pass two (2) tests; the first test shall be after assembly but prior to backfilling and the second test shall be after backfilling.

2. The vacuum test shall include testing of the seal between the cast iron frame and the concrete cone, slab or grad rings.

3. Plug all pipes entering the manhole at least 8 inches into the sewer pipe. The plug must be inflated at a location past the manhole/pipe gasket.

4. Brace all plugs to prevent the plug or pipe from being dislodged and drawn into the manhole.

5. A vacuum of at least 10-1/2 inches of mercury shall be drawn on the manhole. Shut valve on vacuum line to manhole and disconnect vacuum line. Open the vacuum line valve and adjust vacuum to 10 inches of mercury.

6. The pressure gage shall be liquid filled having a 3.5-inch diameter face with a reading from 0 to 30 inches of mercury. The test equipment shall be capable of having 2 gages connected. The gage supplied with the test equipment shall match the reading of a gage furnished by Sanitary Sewer Utility. The gage reading is to be verified on each project.

7. The time elapsed for the vacuum reading to drop from 10 inches of mercury to 9 inches of mercury must not be less than the following times for the manhole to be considered as passing the vacuum test:

Manhole Depth	Time (minutes)
10 feet or less	2

10.1 to 15 feet	2.5
15.1 to 25 feet	3

8. If a manhole fails the vacuum test the manhole shall be uncovered and patched on the exterior of the manhole; retested prior to backfilling when the leak has been patched and then retested after backfill is completed.

g. Video Inspection. All sanitary sewers including pipes, manholes, cleanouts, service connections, service laterals, etc. shall be inspected using a video camera. Immediately prior to video inspection all sewers must be flushed with clean water. The contractor shall provide and run a video camera to check for the presence of sags or other evidence of improper construction. The video shall show the restoration of all surface areas disturbed during construction as well as document that the tops of all manholes and cleanouts are properly adjusted to grade.

1. Furnish one copy of the video to Sanitary Sewer Utility. Video shall comply with the following requirements:

   a. Full color (Not black and white)
   b. Date and time of inspection
   c. Manhole labels
   d. Real time stationing of camera in pipe
   e. Inspection of all joints, fittings, and lateral connections
   f. Locations of observed deficiencies (i.e. bad joints, breaks, leaks, infiltration, etc.)
   g. Pipe ponding in excess of ¾" identified by location
   h. Minimum resolution of 800x600 pixels
   i. Single sided DVD or CD utilizing MPEG compression
   j. DVD/CD and box shall be labeled with manhole numbers, project title, and date

2. The City of Columbia reserves the right to reject sewer lines based upon the video inspection, and complete own video inspection.

3. Faulty sections of sewer lines or manholes rejected by the City shall be repaired or replaced at the Contractors expense to produce a like new product in a manner acceptable to the Engineer.

4. The Contractor shall provide the City a video inspection to document the repair or replacement of any rejected work.

5. Camera Speed shall not be greater than 30 feet per minute.

515.9 Payment. There will be no direct payment for testing and inspections. The cost and expense of such work to the Contractor must be included in the price of the bid for sanitary sewers and concrete structures.

a. The City of Columbia may complete a video inspection at no cost to the Contractor for the first video inspection.

b. All subsequent inspections completed by the City of Columbia will have a fee associated with it.

SECTION 530

GROUTING

530.1. Description. This section covers grouting miscellaneous base plates and other uses of grout as indicated on the drawings. Unless otherwise specified, all grouting shall be done with non-shrinking grout.

530.2. Materials.

Non-shrinking Grout:	Master Builders "Masterflow LL-713 Grout", Sauereisen Cements "F-100 Level Fill Grout", U.S. Grout "Five Star Grout", or USM "Upcon", or equal.
Water:	Clean and free from deleterious substances.

530.3. Non-shrinking Grout. Non-shrinking grout shall be furnished factory premixed so only water is added at the job site. Grout shall be mixed in a mechanical mixer. No more water shall be used than is necessary to produce a flowable grout.

a. Preparation. The concrete foundation to receive non-shrinking grout shall be saturated with water for 24 hours prior to grouting.

b. Placement. Grout shall be placed in strict accordance with the direction of the manufacturer so all spaces and cavities are completely filled without voids.

c. Edge Finishing. The grout shall be finished smooth in all locations where the edge of the grout will be exposed to view after reaching its initial set.

d. Curing. Non-shrinking grout shall be protected against rapid loss of moisture by covering with wet rags or polyethylene sheets. After edge finishing is completed, the grout shall be wet cured for at least seven (7) days.

Holes shall be prepared for grouting as recommended by the grout manufacturer.

DIVISION II

STANDARD DETAILS

STANDARD DETAILS

TABLE OF CONTENTS

TYPICAL STREET SECTIONS		
Miscellaneous	100.01	Symbols
Typical Sections	110.01	Residential Street Typical Cross Sections
	110.02	Collector Street Typical Cross Section
	110.03	Local Non-residential Street Typical Cross Section
	110.04	Sidewalk at Unimproved Roadway
Patching	120.01	Pavement Patching
	120.02	Dig Out Repair
	120.03A	Concrete Pavement Patching
	120.03B	Asphalt Pavement Patching
Signage	130.01	Sign Mounting
Railings	140.01A	Steel Pedestrian Fence
	140.01B	Steel Pedestrian Fence
Retaining Walls	150.01	Ashlar Cut Stone Pattern
CONCRETE PAVEMENTS		
	200.01A	Joint Details
	200.01B	Joint Details
	205.01	Jointing Detail Residential Cul-de-sac
	210.01	Residential Street
	220.01	Collector Street
ASPHALT PAVEMENTS		
	310.01	Residential Street
	320.01	Collector Street

DRIVEWAYS - SIDEWALKS - RAMPS		
Miscellaneous	400.01	Curb Details - Sidewalk Ramp
	400.02	Curb Details - Residential Driveway
	400.03	Curb Details - Commercial Driveway
Driveways	410.01	Driveway Locations
	410.02A	Driveway-Residential 28' Street
	410.02B	Driveway-Residential 32' Street
	410.03	Driveway - Commercial
	410.04	Driveway - Unimproved Street
	410.05	Driveway – Gravel Roadways
	410.06	Alternate Expansion Joint for Driveways on PCC Streets
	410.07	Driveway with Sidewalk at Back of Curb
Sidewalks	420.01	Sidewalk
	420.02	Sidewalk at Back of Curb
	420.03	Sidewalk Reinforcement at Drainage Structure
Ramps - Sidewalks with Grass Parkway	430.01	Sidewalk Ramp - Type A
	430.02	Sidewalk Ramp - Type B
	430.03	Sidewalk Ramp Elevations – Type A & B
	431.01	Mid-block Sidewalk Ramp
Ramps - Sidewalks at Back of Curb	432.01	Sidewalk Ramp - Type A
	432.02	Sidewalk Ramp - Type B
	432.03	Sidewalk Ramp Elevations – Type A & B
	433.01	Mid-block Sidewalk Ramp
Ramps - General	435.01	Detectable Warnings

STORM DRAINAGE		
Miscellaneous	500.01	Drainage Structure Steps
	500.02	Drainage Structure Invert
	500.03	Inlet Opening Trash Rack
	500.04	Drainage Structure Weep Holes
Curb Inlets	505.01A	Type M Inlet - Plan and Sections
	505.01B	Type M Inlet - Notes
	505.01C	Type M Inlet - Section and Detail
	505.01D	Type M Inlet - Setting Diagram
	505.01E	Type M Inlet - Deflector Detail
	505.01F	Type M Inlet - Edge Angle Assembly
	505.02A	Type A Inlet – Single Inlet
	505.02B	Type A Inlet – Double Inlet
Junction Boxes and Area Inlets	510.01	Junction Box
	510.02	Side Opening Inlet
Outfalls	525.01A	Toewall and End Section for RCP
	525.01B	End Section for HDPE and CMP
Swales	530.01	Concrete Swale - V Type
	530.02	Concrete Swale - Flat Bottom Type
	530.03	Riprap with Filter Fabric
	530.04	Overflow Swale at Cul-de-sac
PIPE EMBEDMENT		
	540.01	Pipe Embedment - In Right-of-Way
	540.02	Pipe Embedment - Out of the Right-of-Way
Utility Crossing	541.01	Utility Crossing - In the Right-of-Way

DOWNTOWN IMPROVEMENTS		
	1000.01A	Downtown Area Map
1000.01B - 1000.01D		Downtown Sidewalk Specifications
	1000.02	Downtown Sidewalk
	1000.03	Sidewalk Joint Details
	1000.04	Pavement Patching and Lane Widening
	1000.05	Driveway and Alley
	1000.06	Sidewalk Ramp - Type A
	1000.07	Sidewalk Ramp - Type B
	1000.08	Sidewalk Ramp - Type C
	1000.09	Downtown Tree Planting Detail
	1000.10A	Downtown Sidewalk – Along 8th Street & Broadway
	1000.10B	Downtown Sidewalk – Along 8th Street & Broadway
	1000.16	Trench Grate
SANITARY SEWER		
	1	Standard Manhole
	2	Flat Top Shallow Manhole
	3	Standard Shallow Manhole
	4	Standard Drop Manhole
	5	Deep Drop Manhole
	6	Manhole Adjustment
	7	Manhole Gasket - Pipe Gasket Detail
	8	Manhole Castings - Frame, Lid & Steps
	9	No Detail
	10	Pipe Encasement - Concrete
	11	Pipe Encasement - Steel
	12	Standard Cleanout
	12A	Standard Tracer Wire Test Station

SANITARY SEWER (CONTINUED)		
	13	Standard Service Connection
	14	Deep Service Connection
	15	Lateral Extension For New Construction
	16	V.C.P./D.I.P. Connection
	17	Anchor Detail
	18	Pier Detail
	19	Service Lateral Connection to Cured-In-Place Pipe (CIPP)
	20	Gravity Sewer And Water Line Crossing
	21	Inside Drop Manhole Connection
	22	Doghouse Manhole

LEGEND OF SYMBOLS

POWER POLE	
TELEPHONE POLE	
GUY ANCHOR	
GUY POLE	
STREET LIGHT POLE	
CABLE TELEVISION	C or UC
TELEPHONE	T or UT
ELECTRIC	E or UE
TELEPHONE OR ELECTRIC MANHOLE	T or E
WATER MAIN	W W
GAS MAIN	G G
WATER METER	
GAS METER	
GAS OR WATER VALVE	G or WATER
FIRE HYDRANT	F.H.
SANITARY SEWER	SAN SAN
SANITARY SEWER LATERAL	LAT LAT
SANITARY MANHOLE	M.H.
SANITARY CLEANOUT	C.O.
SANITARY LATERAL CLEANOUT	C.O.
TREE	
TREE REMOVAL	
STUMP	
SIGN	
MAIL BOX	
FENCE	X X
PROPERTY IRON	IF or IC
BENCHMARK	B.M.
MoDOT R/W MARKER	
TRAVERSE POINT	T.P.
PROPERTY LINE	
LOT LINE	
EXISTING RIGHT OF WAY LINE	R.O.W.
EXISTING EASEMENT	
PROPOSED RIGHT OF WAY LINE	R.O.W
PROPOSED PERMANENT EASEMENT	PDE
TEMPORARY CONSTRUCTION EASEMENT	TCE
GRADING LIMIT	

Approved 10/01/16 Date	City of Columbia Public Works Department	SYMBOLS	100.01
Revisions			

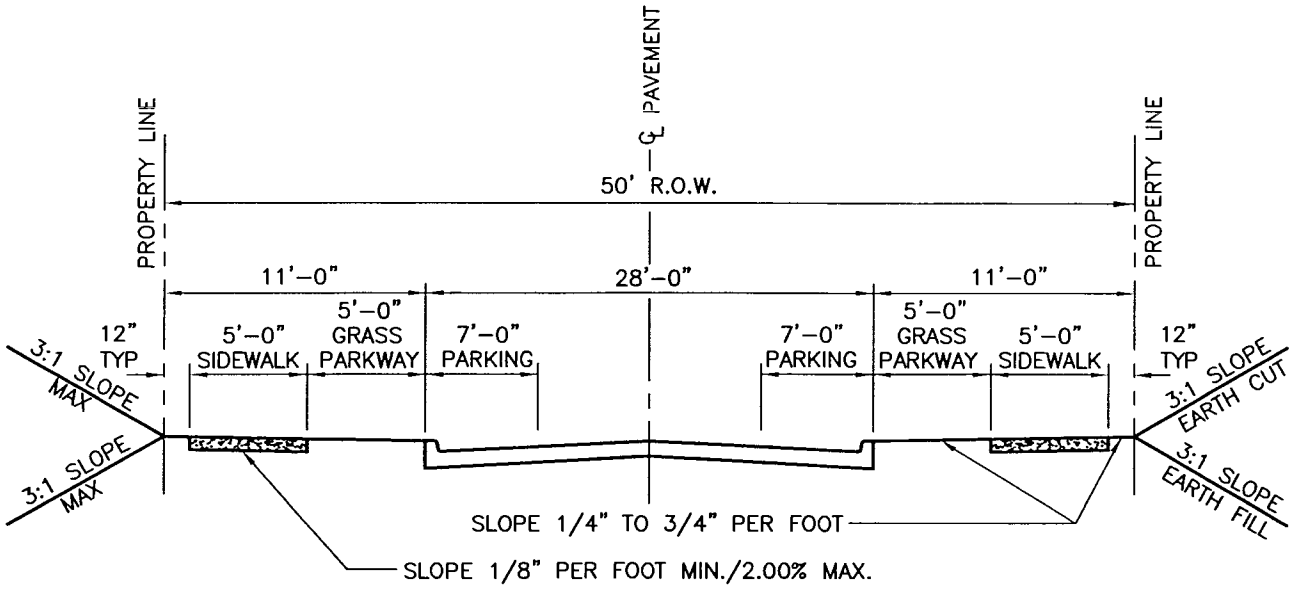

28 FT. PAVEMENT

(Standard Residential Street)

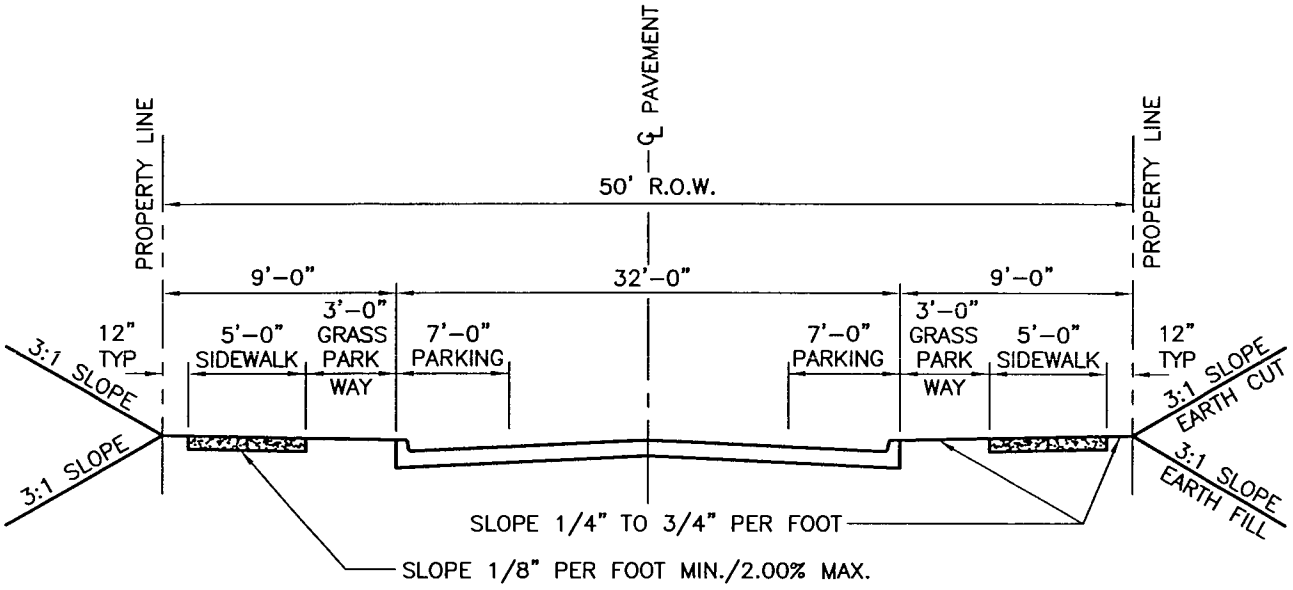

32 FT. PAVEMENT

(Residential Feeder)

NOTE:

SEE CROSS SECTION SHEETS FOR VARIATIONS DUE TO ROCK EXCAVATION. EXISTING LAWN GRADES, ETC. SEE PLAN SHEETS FOR LOCATION OF PAVEMENT AND SIDEWALKS WITHIN RIGHT-OF-WAY. SIDEWALK CROSS SLOPE SHALL NOT EXCEED 2.00%.

Approved 10/01/16 Date	City of Columbia Public Works Department	RESIDENTIAL STREET TYPICAL CROSS SECTIONS	110.01
Revisions			

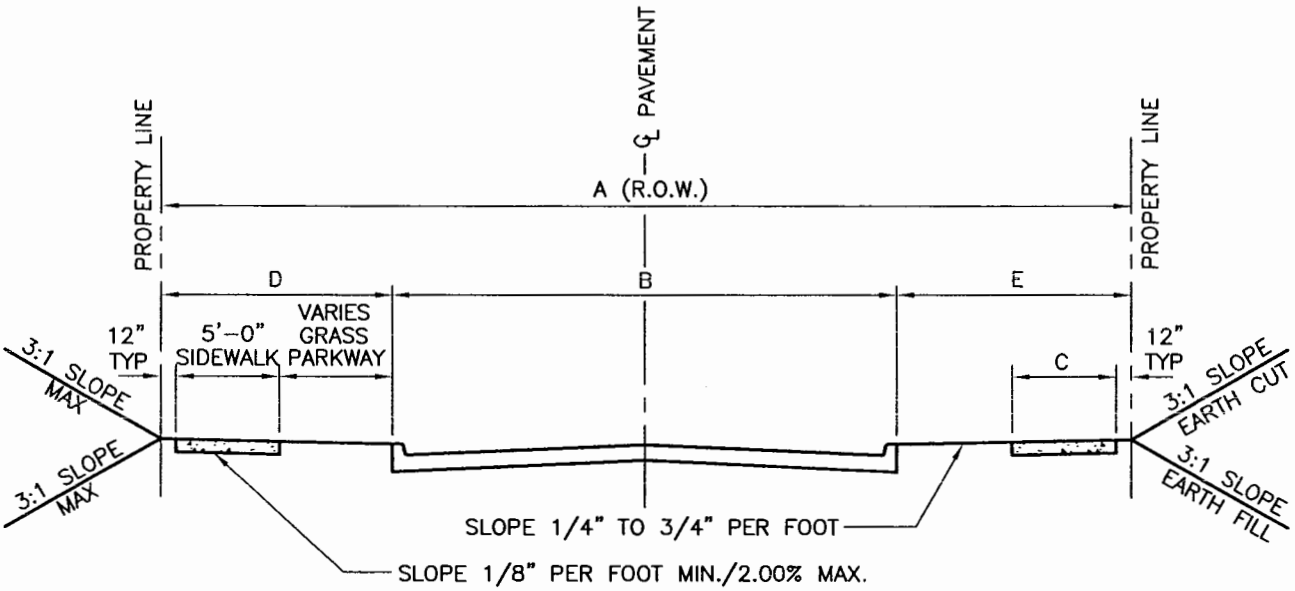

NOTE:

SEE CROSS SECTION SHEETS FOR VARIATIONS DUE TO ROCK EXCAVATION. EXISTING LAWN GRADES, ETC. SEE PLAN SHEETS FOR LOCATION OF PAVEMENT AND SIDEWALKS WITHIN RIGHT-OF-WAY. SIDEWALK CROSS SLOPE SHALL NOT EXCEED 2.00%.

ITEM	A	B	C	D	E
NEIGHBORHOOD COLLECTOR OPTION A	60'	34'	5'	13'	13'
NEIGHBORHOOD COLLECTOR OPTION B	60'	30'	5'	15'	15'
MAJOR COLLECTOR	66'	36'	5'	15'	15'
MAJOR COLLECTOR OPTION A	66'	32'	8'	16'	18'
MAJOR COLLECTOR OPTION B	76'	44'	8'	15'	17'

Approved 10/01/16 Date

Revisions

City of Columbia
Public Works Department

COLLECTOR STREET TYPICAL CROSS SECTION

110.02

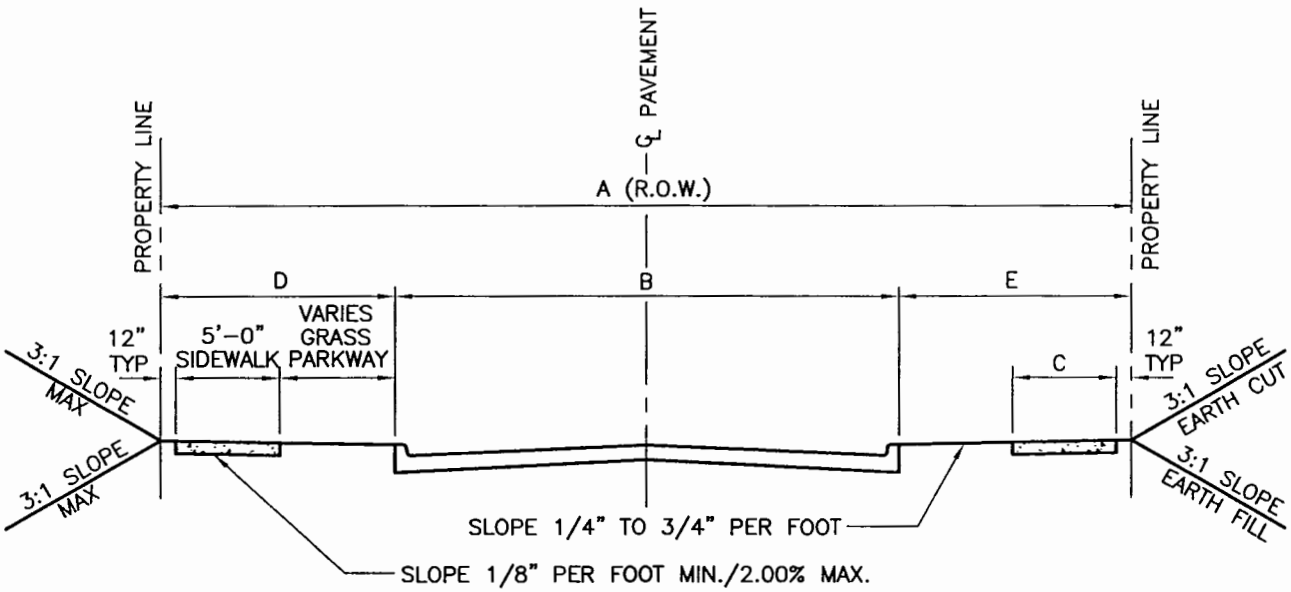

NOTE:

SEE CROSS SECTION SHEETS FOR VARIATIONS DUE TO ROCK EXCAVATION. EXISTING LAWN GRADES, ETC. SEE PLAN SHEETS FOR LOCATION OF PAVEMENT AND SIDEWALKS WITHIN RIGHT-OF-WAY.
SIDEWALK CROSS SLOPE SHALL NOT EXCEED 2.00%.

ITEM	A	B	C	D	E
NON-RESIDENTIAL STREET	66'	36'	5'	15'	15'
NON-RESIDENTIAL STREET OPTION A	60'	30'	5'	15'	15'
NON-RESIDENTAIL STREET OPTION B	60'	30'	5'	15'	15'
NON-RESIDENTIAL STREET OPTION C	66'	38'	5'	14'	14'

Approved 10/01/16 Date

Revisions

City of Columbia
Public Works Department

LOCAL NON-RESIDENTIAL STREET TYPICAL CROSS SECTION

110.03

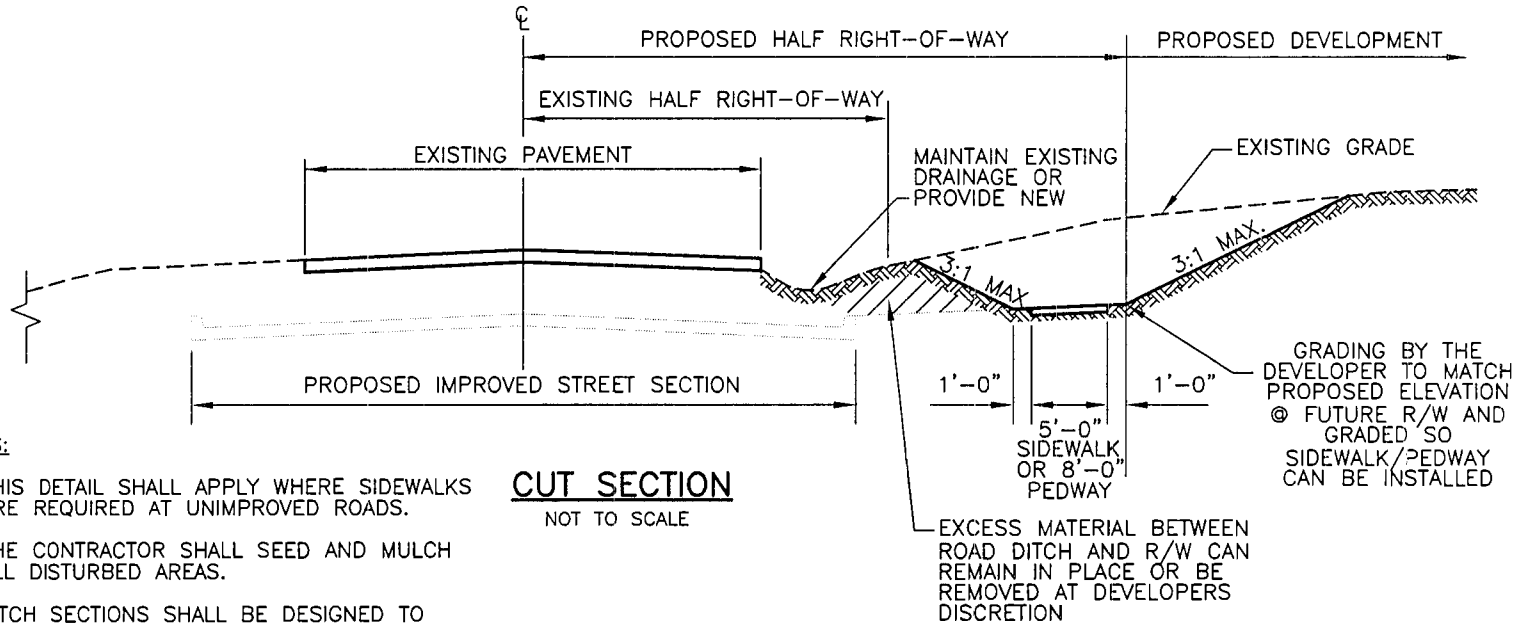

CUT SECTION

NOT TO SCALE

NOTES:

1. THIS DETAIL SHALL APPLY WHERE SIDEWALKS ARE REQUIRED AT UNIMPROVED ROADS.
2. THE CONTRACTOR SHALL SEED AND MULCH ALL DISTURBED AREAS.
3. DITCH SECTIONS SHALL BE DESIGNED TO CARRY THE APPROPRIATE DESIGN FLOW. DEVELOPER IS RESPONSIBLE TO MAINTAIN DRAINAGE.
4. PUBLIC WORKS ENGINEERING TO PROVIDE PROPOSED HORIZONTAL & VERTICAL ALIGNMENT OF IMPROVED STREET SECTION.
5. IMPROVED STREET SECTION TO BE DETERMINED BY THE CITY OF COLUMBIA.
6. PROVIDE SIDEWALK ELEVATIONS AT EACH LOT LINE OR EVERY 100 FEET, WHICHEVER IS LESS.

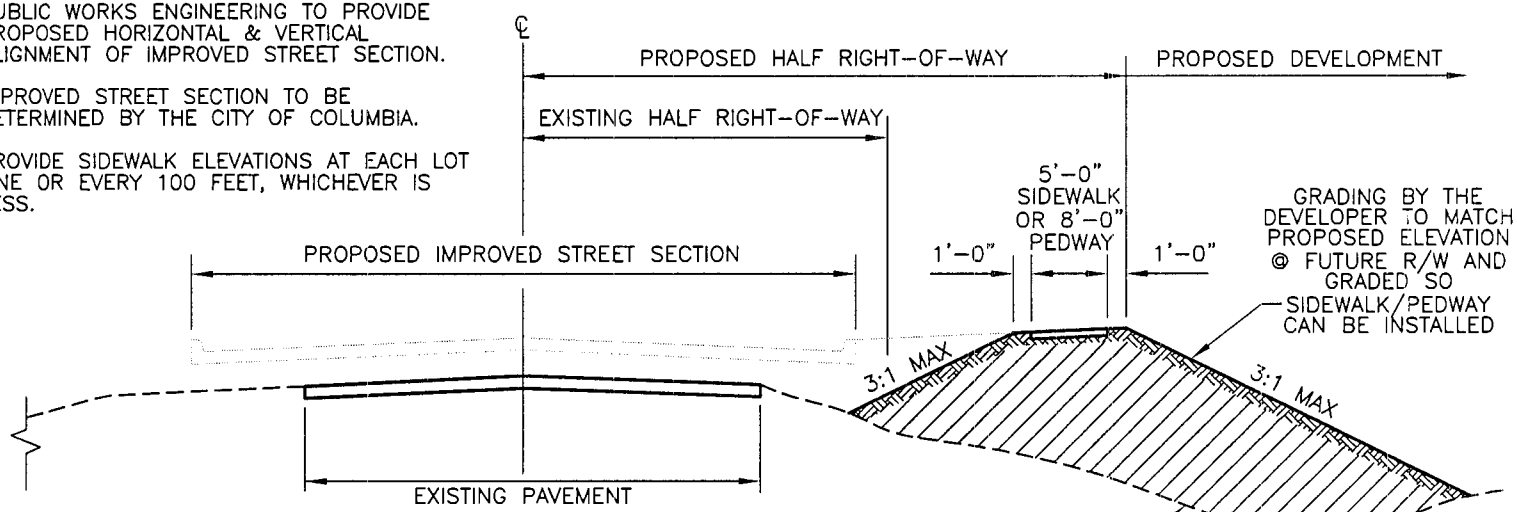

FILL SECTION

NOT TO SCALE

City of Columbia
Public Works Department

Approved
Revisions
Date 10/01/16

SIDEWALK AT UNIMPROVED ROADWAY

110.04

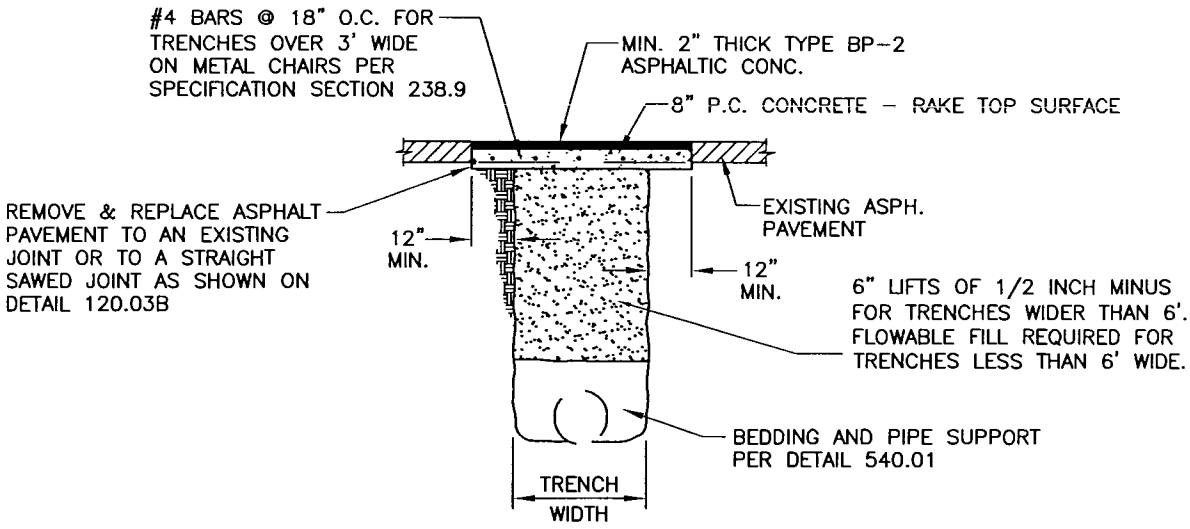

EXISTING ASPHALTIC PAVEMENT

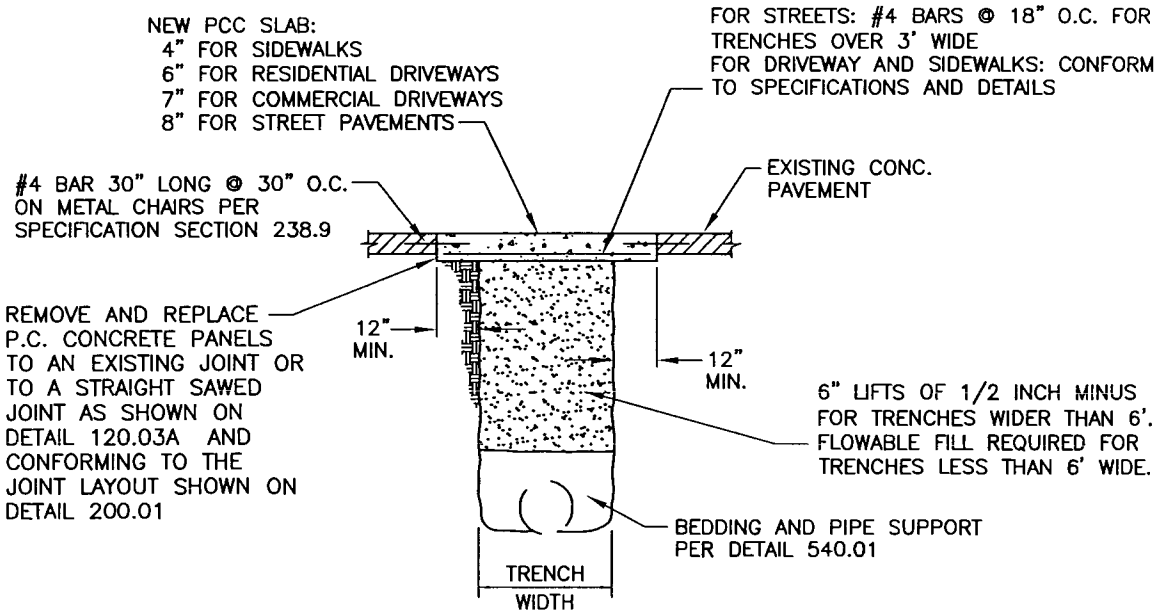

EXISTING CONCRETE PAVEMENT

NOTES:

1. CONCRETE SHALL BE MoDOT PAVEMENT CONCRETE. REINFORCING STEEL SHALL BE GRADE 60.
2. FOR BRICK STREETS W/ASHPALTIC OVERLAY THE TOP OF 8" P.C.C. SLAB SHALL MATCH THE TOP OF BRICKS AND THE NEW ASPHALT THICKNESS SHALL MATCH EXSTING ASPHALT THICKNESS.
3. FOR BRICK STREETS THE TOP OF 8" P.C.C. SLAB SHALL MATCH TOP OF SUBGRADE.

Approved 10/01/16 Date	City of Columbia Public Works Department	PAVEMENT PATCHING	120.01
Revisions			

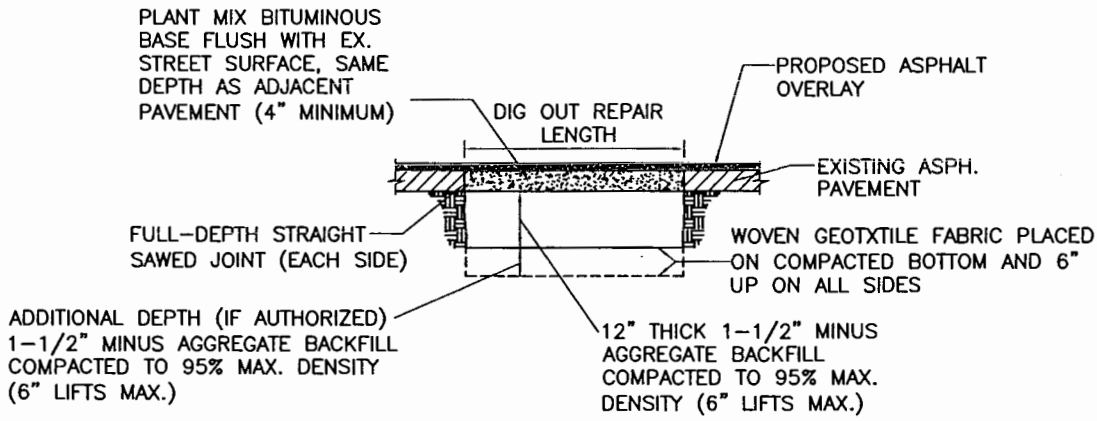

NOTES:

1. SAW CUT AREA DESIGNATED BY PUBLIC WORKS.

2. EXCAVATE TO A DEPTH OF 12" MINIMUM BELOW BOTTOM OF EXISTING STREET ELEVATION. IF ADDITIONAL DEPTH DIG OUT IS REQUIRED AND AUTHORIZED, PROCEED WITH STEPS BELOW AND ADD STEP 4A.

3. BASE MUST BE APPROVED BY ENGINEER BEFORE PLACEMENT OF FABRIC AND ROCK.

4. COMPACT BOTTOM AND PLACE WOVEN FABRIC (MIRAFI 600X OR APPROVED EQUAL).

4A. PLACE TYPE 2, 1-1/2" MINUS AGGREGATE COMPACTED IN 6" MAXIMUM LIFTS TO REACH THE NORMAL DIG OUT REPAIR DEPTH OF 16" BELOW EXISTING STREET ELEVATION. ADDITIONAL DEPTH SHALL BE PAID BY THE CUBIC YARD PER THE BID FORM.

5. PLACE TWO (2) 6" LIFTS OF TYPE 2, 1-1/2" MINUS COMPACTED AGGREGATE.

6. PLACE 4" MINIMUM LIFT OF COMPACTED PLANT MIX BITUMINOUS BASE ON PRIMED BASE ROCK. FINISH SHALL BE FLUSH WITH EXISTING ROAD SURFACE AND HAVE A SMOOTH RIDE.

7. CONTRACTOR SHALL REMOVE AND DISPOSE OF ALL MATERIALS EXCAVATED FROM THE REPAIR AREA.

Approved	10/01/16 Date	City of Columbia Public Works Department	DIG OUT REPAIR	120.02
Revisions			

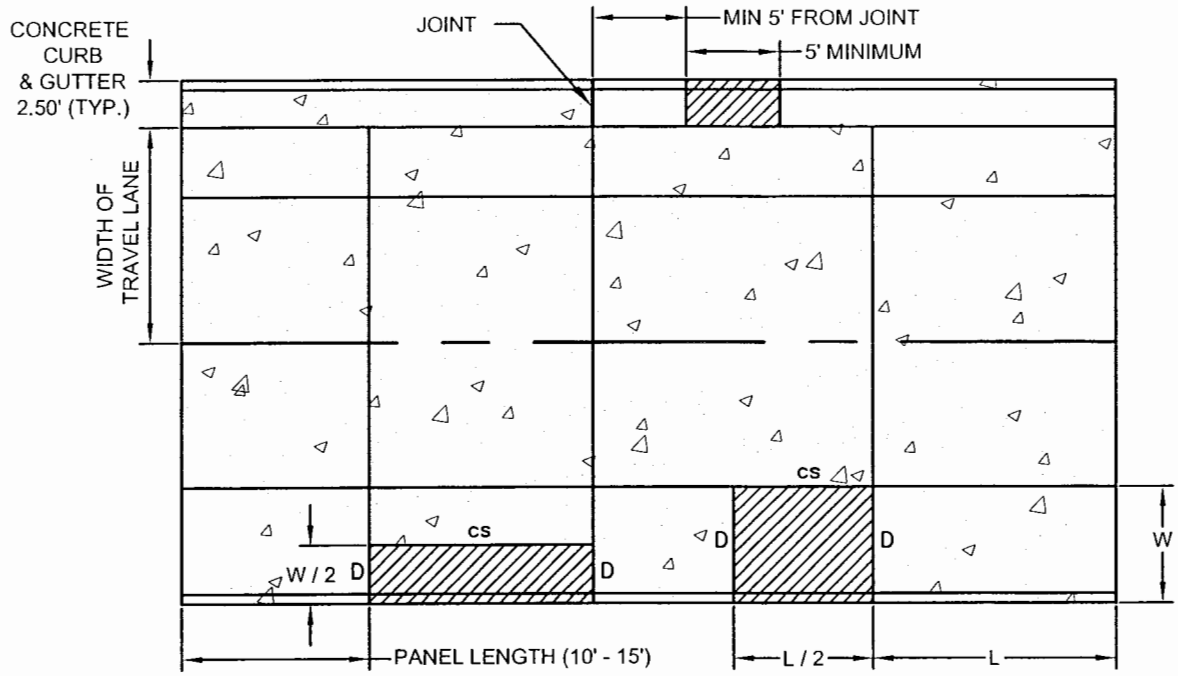

CONCRETE PAVEMENT PATCH NOTES:

1. HALF PANELS MAY BE REPLACED PER THIS DETAIL. WHERE A REPAIR DOES NOT FALL IN THE HALF PANEL, REPLACE FULL PANEL.
2. A MINIMUM OF 5' OF CURB AND GUTTER SHALL BE REPLACED. WHERE THE REPAIR WILL BE WITHIN 5' OF A JOINT, REPLACE CURB AND GUTTER TO THE JOINT. NO SECTION OR CURB AND GUTTER SHALL BE LESS THAN 5' LONG.
3. ALL SAWING OF STREETS SHALL BE FULL DEPTH AND DONE IN A NEAT AND WORKMANLIKE MANNER.
4. INSTALL PAVEMENT JOINT TYPES AS SHOWN AND DOWEL CURB AND GUTTER AND PANELS PER STANDARD DETAILS.
5. L =PANEL LENGTH
6. W = PANEL WIDTH

Approved 10/01/16 Date Revisions	City of Columbia Public Works Department	CONCRETE PAVEMENT PATCHING	120.03A

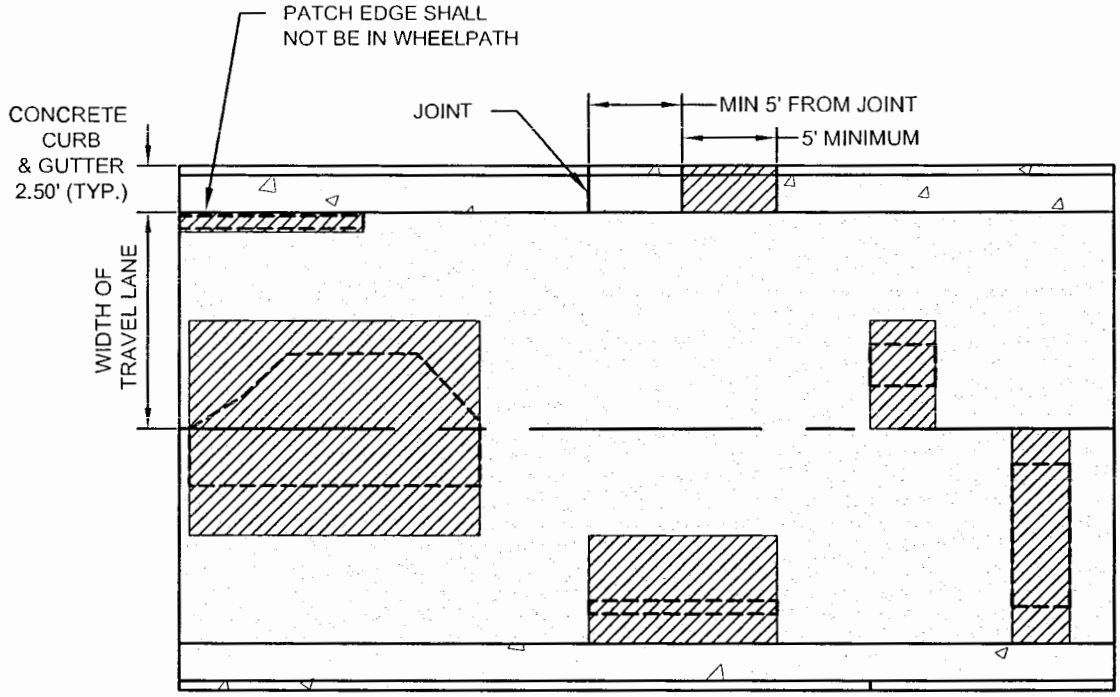

REQUIRED PAVEMENT PATCH OR PANEL/CURB REPLACEMENT

EXAMPLES OF WORK LIMITS/ PAVEMENT TO BE REPAIRED

ASPHALT PAVEMENT PATCH NOTES:

1. EXISTING PAVEMENTS SHALL BE REMOVED TO CLEAN, STRAIGHT LINES. MAKE CUTS PARALLEL OR PERPENDICULAR TO TRAFFIC FLOW. PATCH EDGES PARALLEL TO TRAFFIC FLOW SHALL NOT BE LOCATED IN WHEEL PATHS.
2. AVOID BREAKING AWAY THE EDGES OF EXISTING PAVEMENT OR DAMAGING THE REMAINING PAVEMENT WITH CONSTRUCTION EQUIPMENT.
3. AVOID PATCHES WITHIN EXISTING PATCHES. IF THIS CANNOT BE AVOIDED, MAKE THE BOUNDARIES OF THE PATCHES COINCIDE.
4. PATCHES SHOULD HAVE A SMOOTH LONGITUDINAL GRADE CONSISTENT WITH THE EXISTING ROADWAY. PATCHES SHOULD ALSO HAVE A CROSS SLOPE OR CROSS SECTION CONSISTENT WITH THE DESIGN OF THE EXISTING ROADWAY.
5. A MINIMUM OF 5' OF CURB AND GUTTER SHALL BE REPLACED. WHERE THE REPAIR WILL BE WITHIN 5' OF A JOINT, REPLACE CURB AND GUTTER TO THE JOINT. NO SECTION OR CURB AND GUTTER SHALL BE LESS THAN 5' LONG.

Approved 10/01/16 Date	City of Columbia Public Works Department	ASPHALT PAVEMENT PATCHING	120.03B
Revisions			

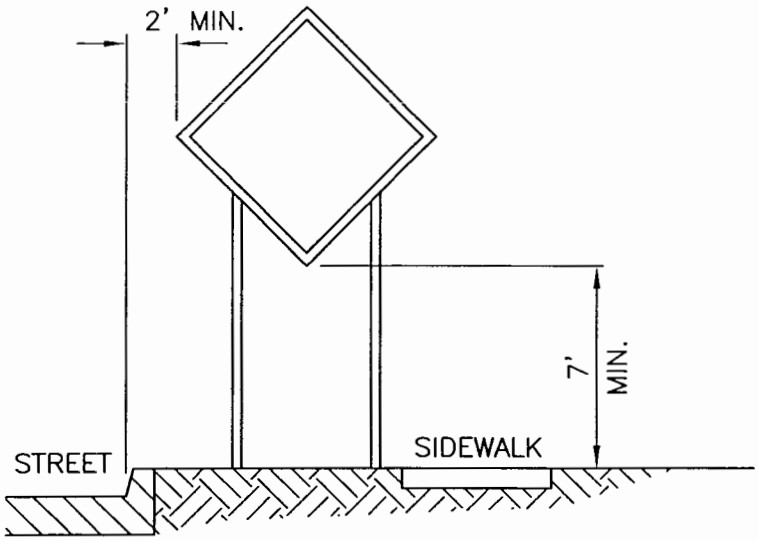

CURB & GUTTER MOUNTING

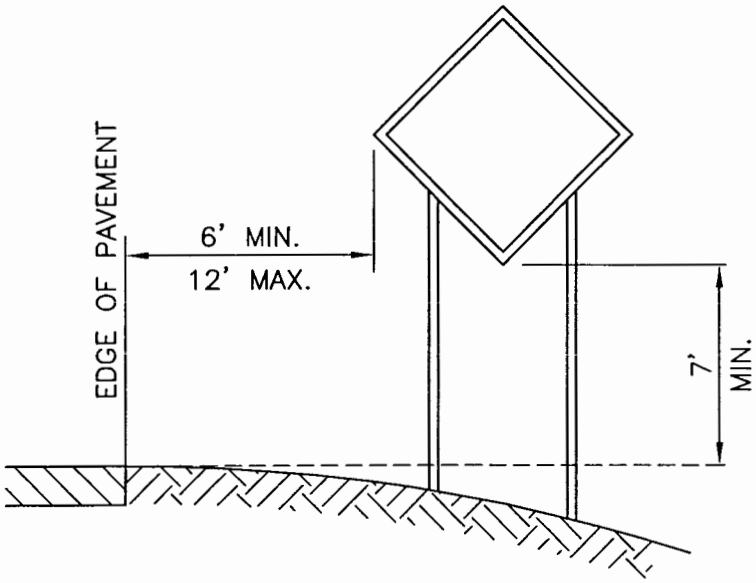

NON–CURB & GUTTER MOUNTING

NOTE: SUPPORT POSTS SHALL NOT EXTEND ABOVE SIGN UNLESS DISTANCE PLAQUE OR WARNING LIGHTS ARE SPECIFIED.

Approved 10/01/16 Date	City of Columbia Public Works Department	SIGN MOUNTING	130.01
Revisions			

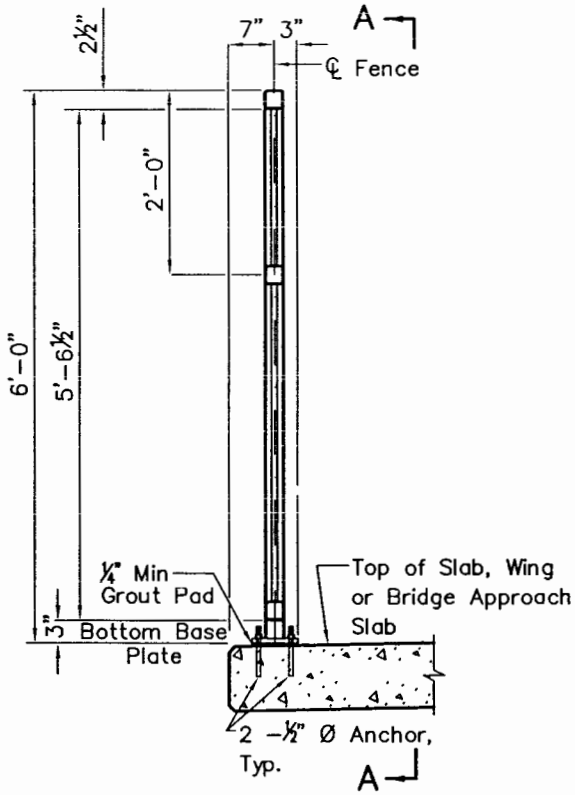

TYPICAL SECTION

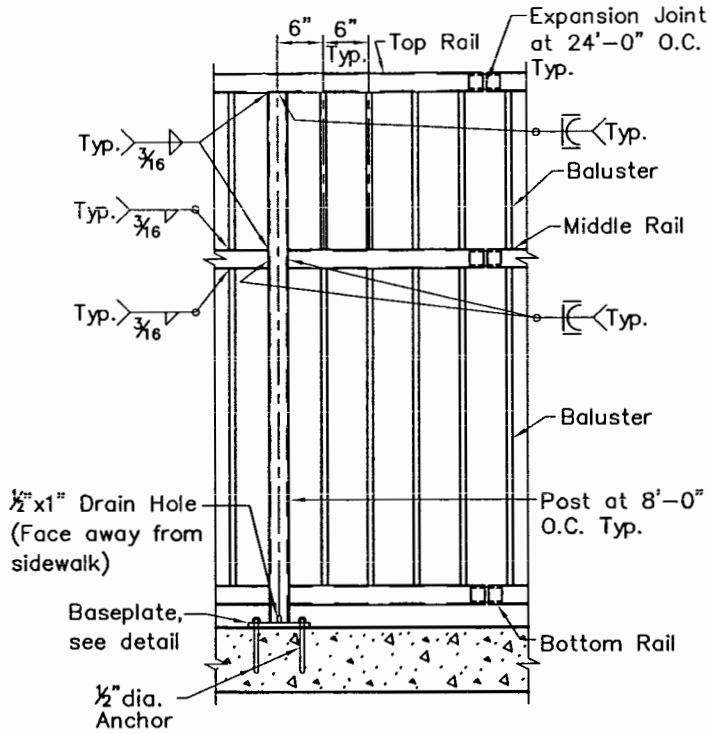

SECTION A-A

NOTE:

Anchors shall be drilled in place. Exposed portion of anchors, nuts and washers shall be field painted after installation.

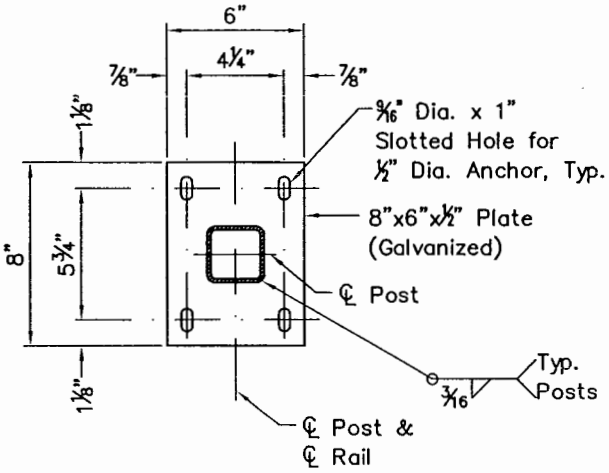

BASE PLATE DETAIL

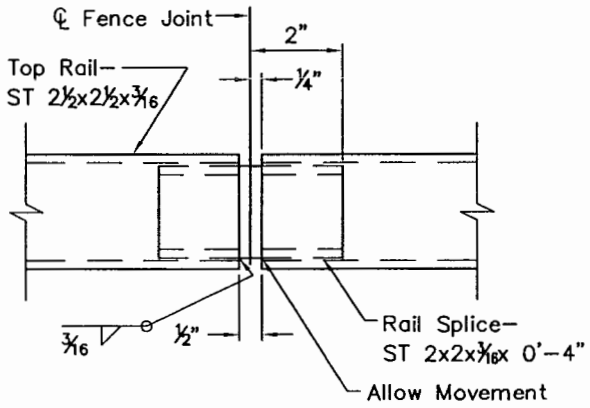

EXPANSION JOINT DETAIL

Shown at Top Rail.
Middle and Bottom Rail similar.

Approved 10/01/16 Date	City of Columbia Public Works Department	STEEL PEDESTRIAN FENCE	140.01A
Revisions			

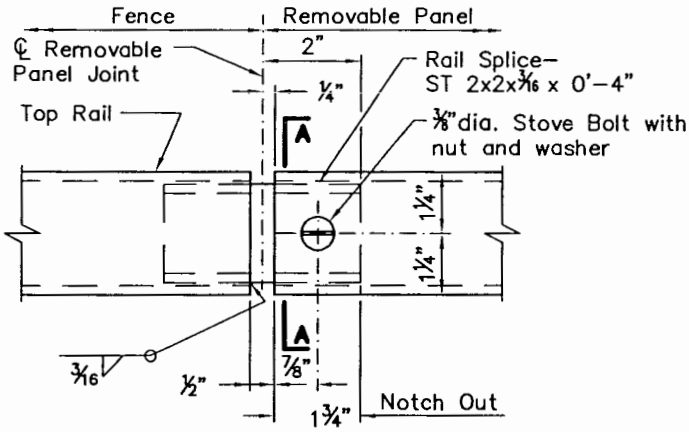

REMOVEABLE PANEL JOINT DETAIL

Shown at Top Rail.
Middle and Bottom Rail similar.

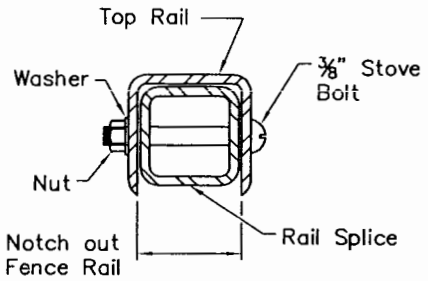

SECTION A–A

GENERAL NOTES:

1. All rails and posts shall be 2½"x2½"x3/16" structural tubing. Tubing for all rails and posts shall conform to ASTM A500, Grade B. Balusters shall be ¾"x¾" steel bar. Balusters and base plates shall conform to ASTM A709, Grade 36.

2. Galvanize and paint all rails, posts, balusters and base plates after fabrication. Galvanization shall be in accordance with ASTM A123 and Missouri Standard Specification for Highway Construction Sec. 1081. Fence shall be painted with System G (Black) in accordance with Sec 1081. Black color shall be federal color number 17038.

3. Rails and base plates shall be set parallel to top of slab. All posts and balusters shall be set vertical. Grout shall be used between concrete and base plate of post.

4. All rail–to–post welded connections shall be ground smooth. No field welding will be permitted. The Contractor shall submit shop drawings to the Engineer for approval prior to fabrication of the fence.

5. Use E70 XX electrodes for all welding.

6. All material, labor, splices, grout, and installation shall be paid for under the bid item "Pedestrian Fence" per linear foot.

7. A grouted leveling pad shall be used to erect the posts vertical. The leveling pads shall be a non–shrink grout as approved by the Engineer. The grout shall be mixed, applied and cured according to the manufacturer's recommendations.

8. Concrete anchors, nuts and washers shall be galvanized in accordance with ASTM A153 and Sec.1081.

9. Nuts shall conform to ASTM A307. Nuts shall be regular hexagon type. Washers shall be of standard commercial quality.

10. The concrete anchors shall have a minimum ultimate pullout strength of 7900 lbs. based on the concrete. The length of embedment into concrete shall conform to manufacturer's recommendations.

Approved 10/01/16 Date	City of Columbia Public Works Department	STEEL PEDESTRIAN FENCE	140.01B
Revisions			

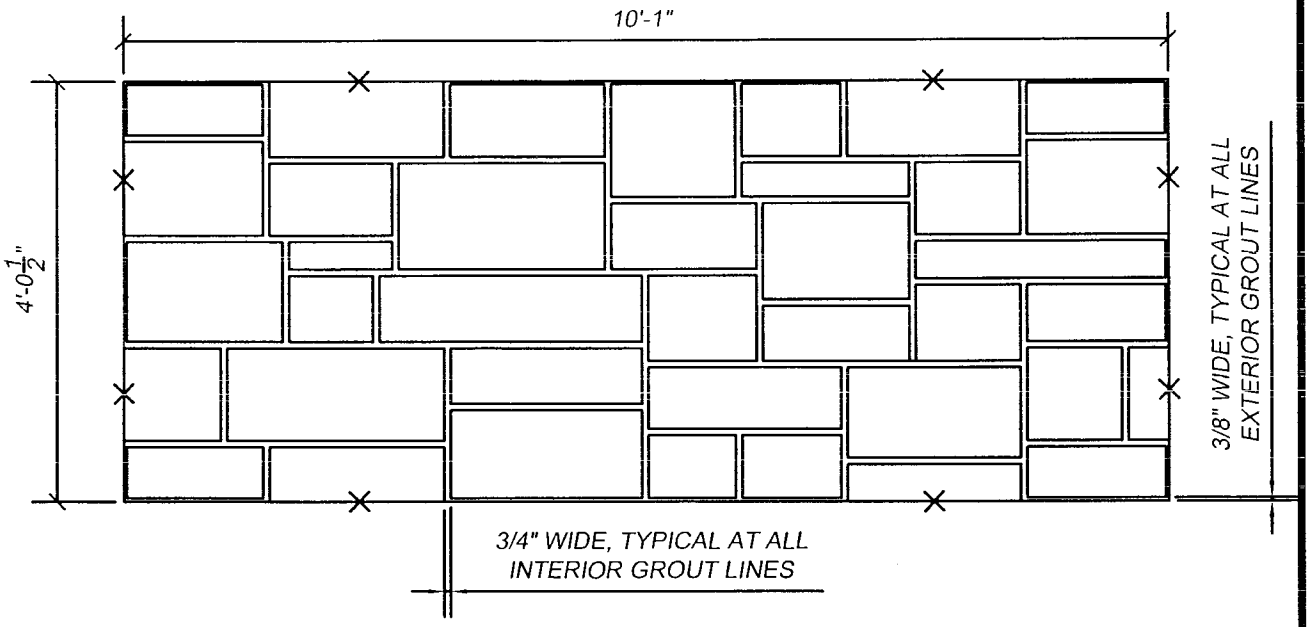

TYPICAL ASHLAR CUT STONE PATTERN

NOT TO SCALE

GENERAL NOTES

1. STONE HEIGHTS: 3½" TO 13"
2. STONE WIDTHS: 9½" TO 30½"
3. MAXIMUM PATTERN DEPTH: 1½"
4. PERIMETER ½ GROUT LINE WITH PATTERN MATCHING – (8) PARTIAL STONES (X's)
5. PROFILE ALLOWS PATTERN MATCHING WITH 180 DEGREE ROTATION OF ADJOINING SHEET

NOTE: ASHLAR CUT STONE PATTERN SHALL BE GREENSTREAK GSK460 OR APPROVED EQUAL. CONTRACTOR SHALL SUBMIT ASHLAR CUT STONE PATTERN FORM LINER SYSTEM SPECIFICATIONS AND DRAWING OF THE ASHLAR STONE FORM PATTERN FOR THE APPROVAL OF THE CITY.

Approved 10/01/16 Date	City of Columbia Public Works Department	ASHLAR CUT STONE PATTERN	150.01
Revisions			

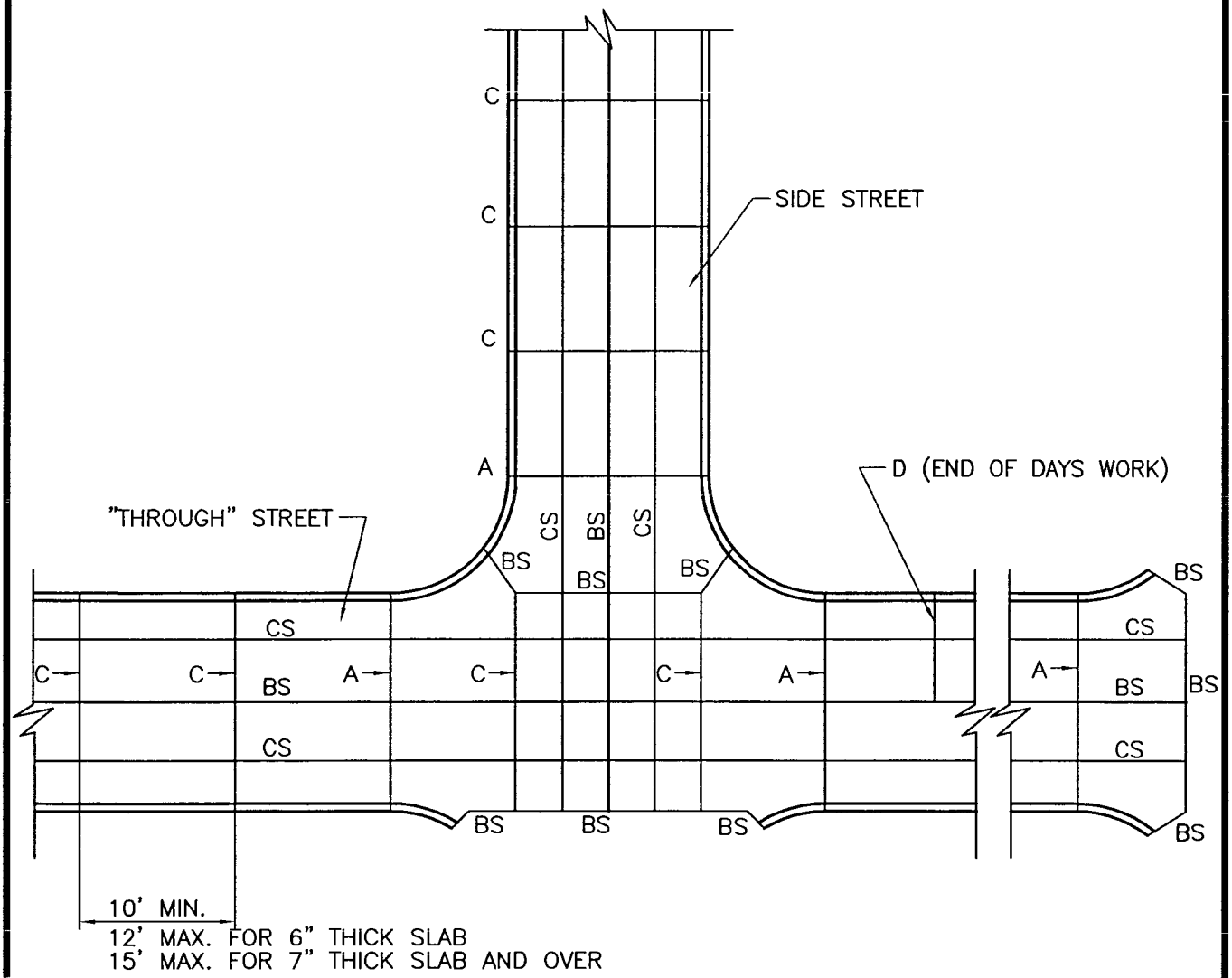

JOINT LOCATION PLAN

NOTE:

1. TRANSVERSE TYPE C JOINTS SHALL BE SAWED AS SOON AS CONCRETE CAN WITHSTAND RAVELING, JOINTS SHALL BE CLEANED AND FILLED WITH BITUMINOUS COMPOUND IMMEDIATELY FOLLOWING SAWING.
2. INSTALL TYPE A EXPANSION JOINTS AT INTERSECTIONS, AND AT STRUCTURES.
3. INSTALL TYPE A EXPANSION JOINTS AT PC & PT OF CURVES. WITH DEFLECTION ANGLE OF GREATER THAN 30°.
4. INSTALL TYPE A EXPANSION JOINT AT BULB OF CUL-DE-SAC.
5. INSTALL TYPE A EXPANSION JOINT AT 500' SPACING MAXIMUM.
6. USE TYPE D JOINT AT END OF DAYS WORK.

Approved 10/01/16 Date	City of Columbia Public Works Department	JOINT DETAILS (P.C. Concrete Pavement)	200.01A
Revisions			

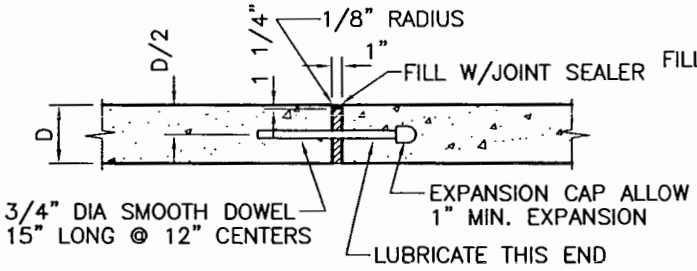

TYPE A
EXPANSION JOINT

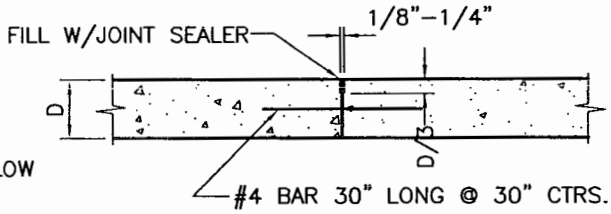

TYPE Ⓒ – CONSTRUCTED WITHOUT TIE BAR
TYPE ⓒⓢ – REQUIRES TIE BAR

TYPE C & CS
SAWED

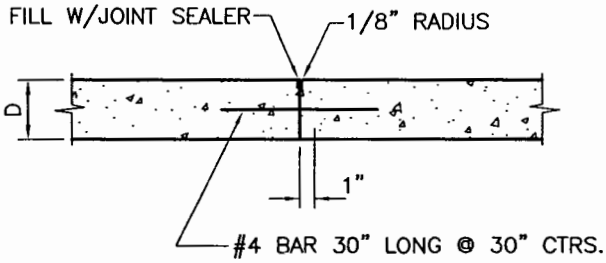

TYPE BS
KEYED CONSTRUCTION JOINT
(With Steel)

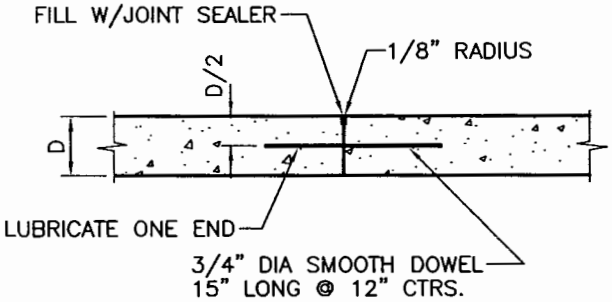

TYPE D
TRANSVERSE CONSTRUCTION JOINT

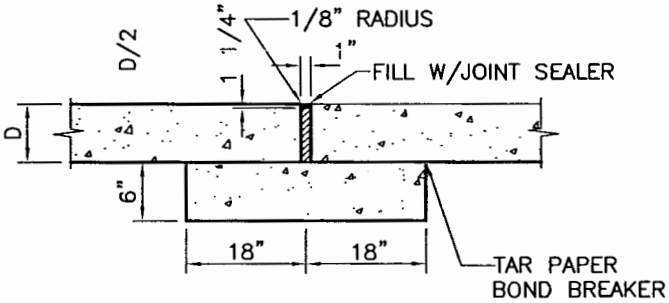

TYPE A ALTERNATE
CONCRETE SILL

NOTE: ALL DRILLED DOWEL BARS SHALL BE EXPOXIED.

Approved 10/01/16 Date Revisions	City of Columbia Public Works Department	JOINT DETAILS (P.C. Concrete Pavement)	200.01B

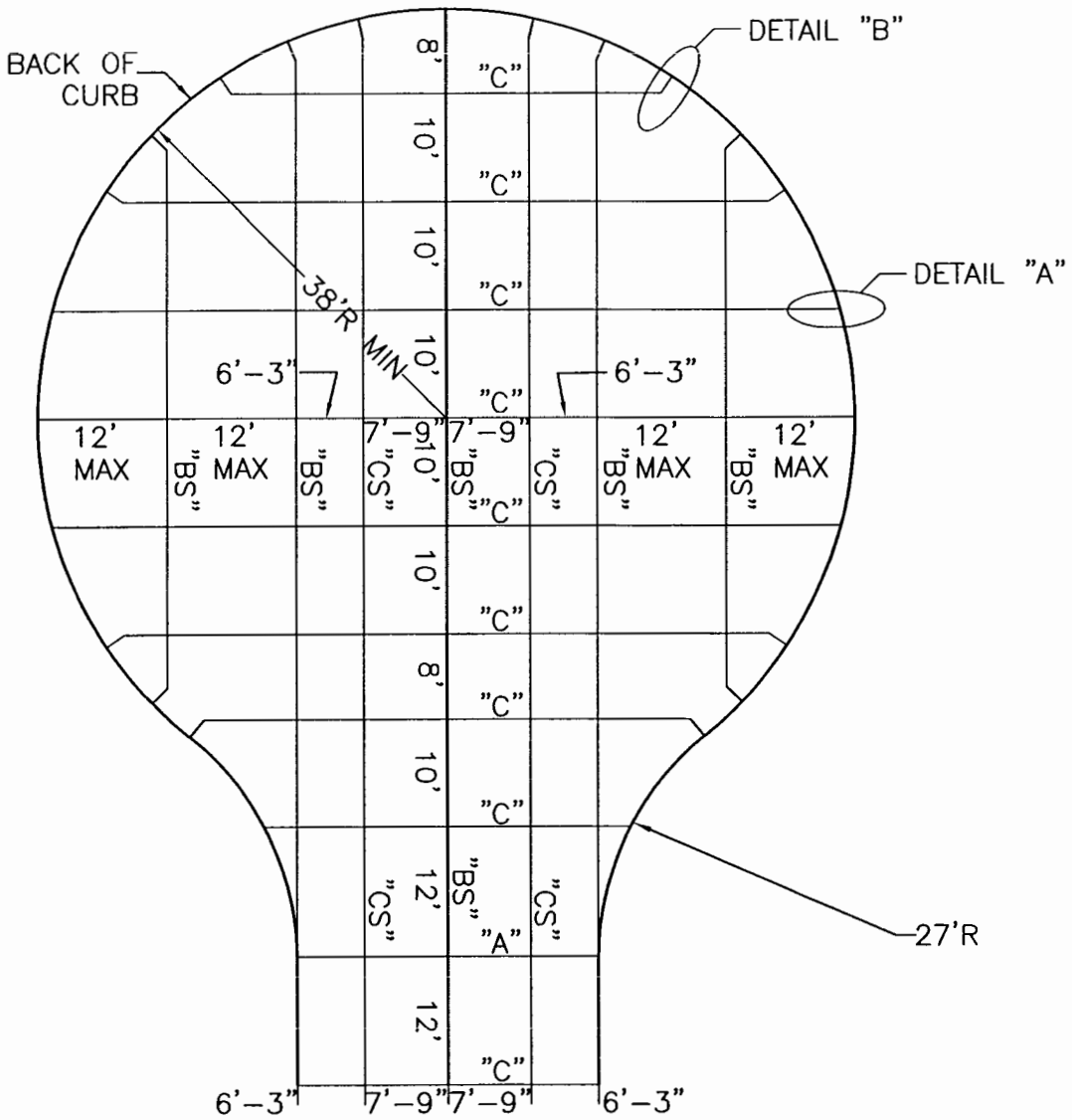

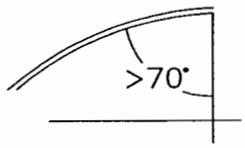

DETAIL "A"

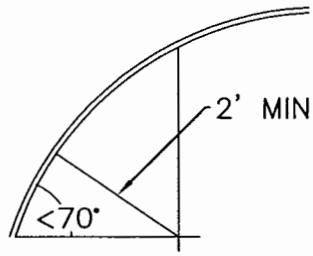

DETAIL "B"

NOTE:
1. OTHER CUL-DE-SAC CONFIGURATIONS TO BE APPROVED BY THE DIRECTOR OF PUBLIC WORKS.

Approved 10/01/16 Date Revisions	City of Columbia Public Works Department	JOINTING DETAIL Residential Cul-de-sac	205.01

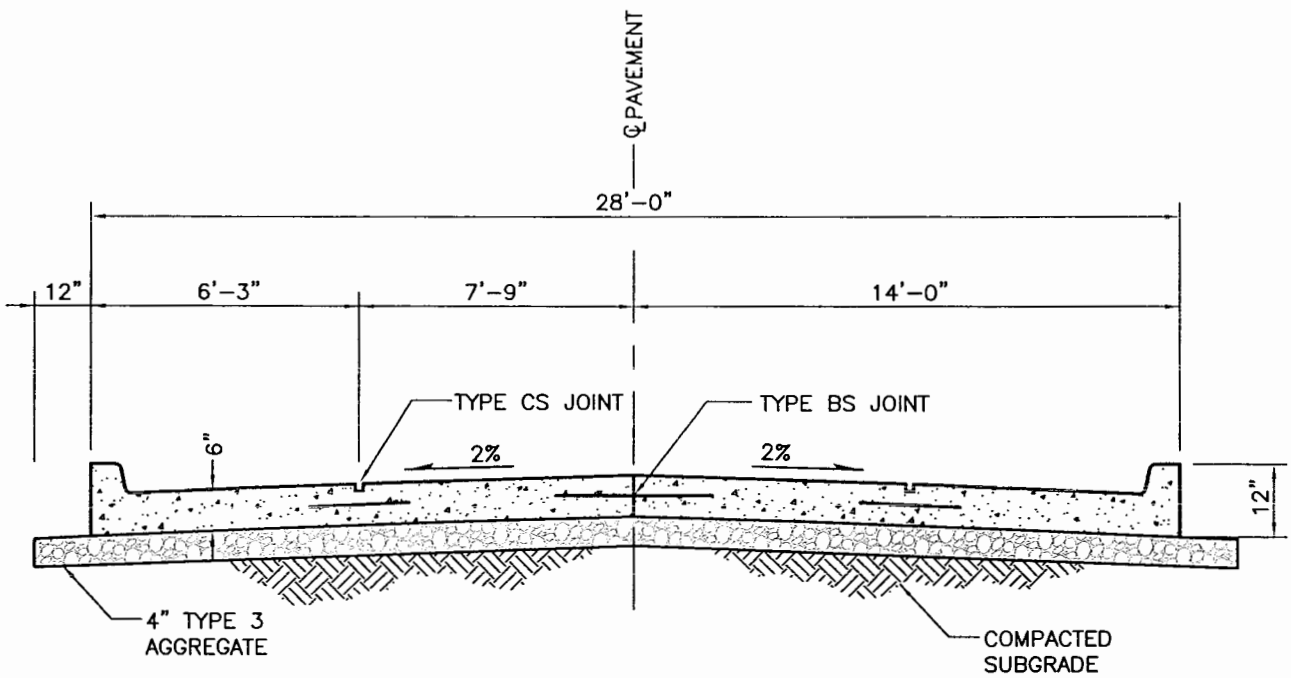

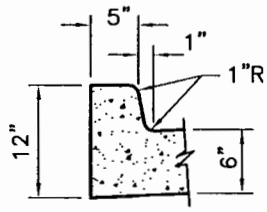

INTEGRAL CURB SECTION

NOTES:

1. ALL P.C. CONCRETE SHALL BE MoDOT PAVEMENT CONCRETE.
2. SEE DETAIL 200.01 FOR JOINT DETAILS.

Approved 10/01/16 Date Revisions	City of Columbia Public Works Department	RESIDENTIAL STREET (Concrete Pavement)	210.01

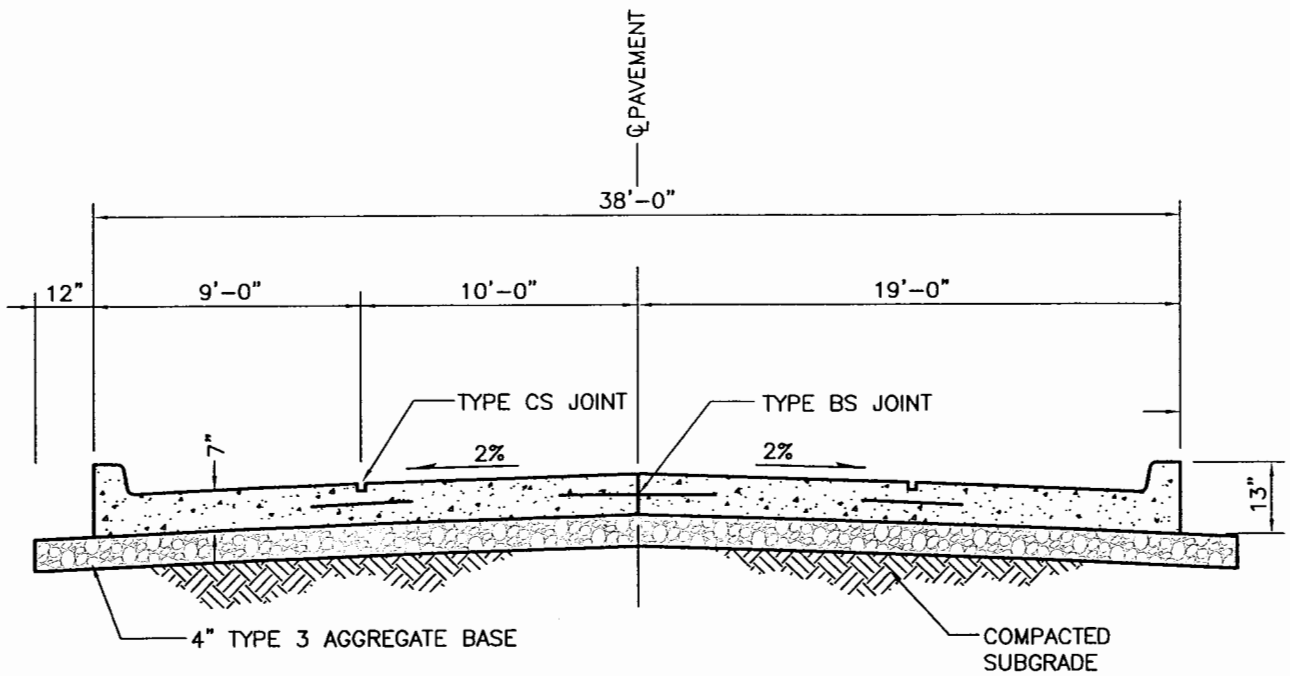

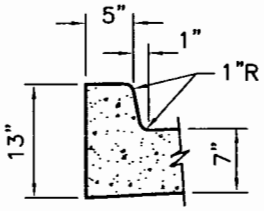

INTEGRAL CURB SECTION

NOTES:

1. ALL P.C. CONCRETE SHALL BE MoDOT PAVEMENT CONCRETE
2. SEE DETAIL 200.01 FOR JOINT DETAILS.

Approved 10/01/16 Date Revisions	City of Columbia Public Works Department	COLLECTOR STREET (Concrete Pavement)	220.01

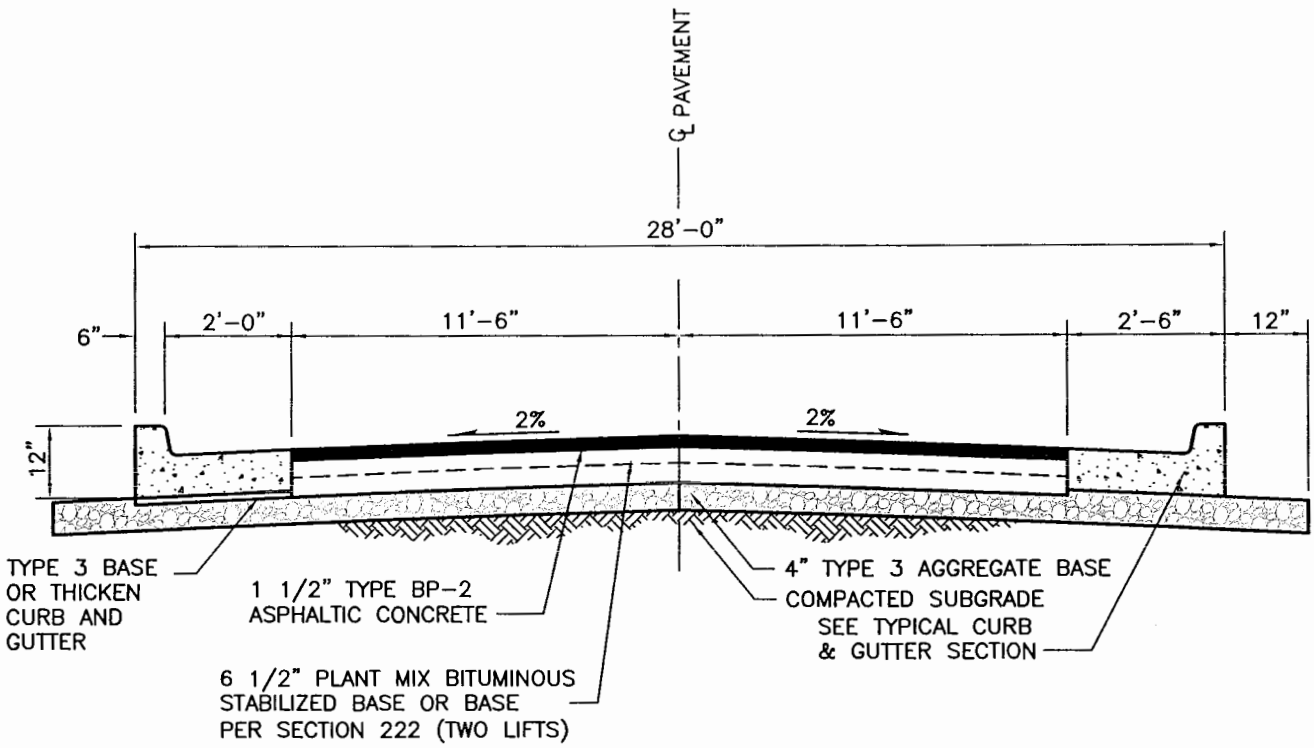

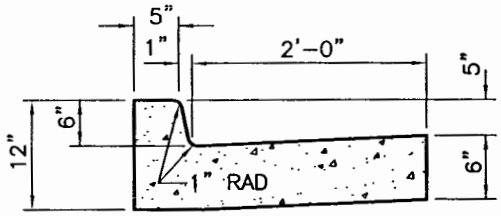

TYPICAL CURB AND GUTTER SECTION

NOTES:

1. ALL P.C. CONCRETE SHALL BE MoDOT PAVEMENT CONCRETE.
2. INSTALL 1/2" EXPANSION JOINTS IN CURB AND GUTTER SECTION AT P.C. AND P.T. OF CURB RADIUS OF INTERSECTIONS AND EVERY 150'.
3. INSTALL SAW JOINTS IN CURB AND GUTTER SECTION AT 10 FT. MAXIMUM SPACING, SEAL WITH BITUMASTIC JOINT SEALANT.
4. 4% PARABOLIC CROWN IS ACCEPTABLE IN LIEU OF 2% NORMAL CROWN.

Approved 10/01/16 Date	City of Columbia Public Works Department	RESIDENTIAL STREET (Asphaltic Pavement)	310.01
Revisions			

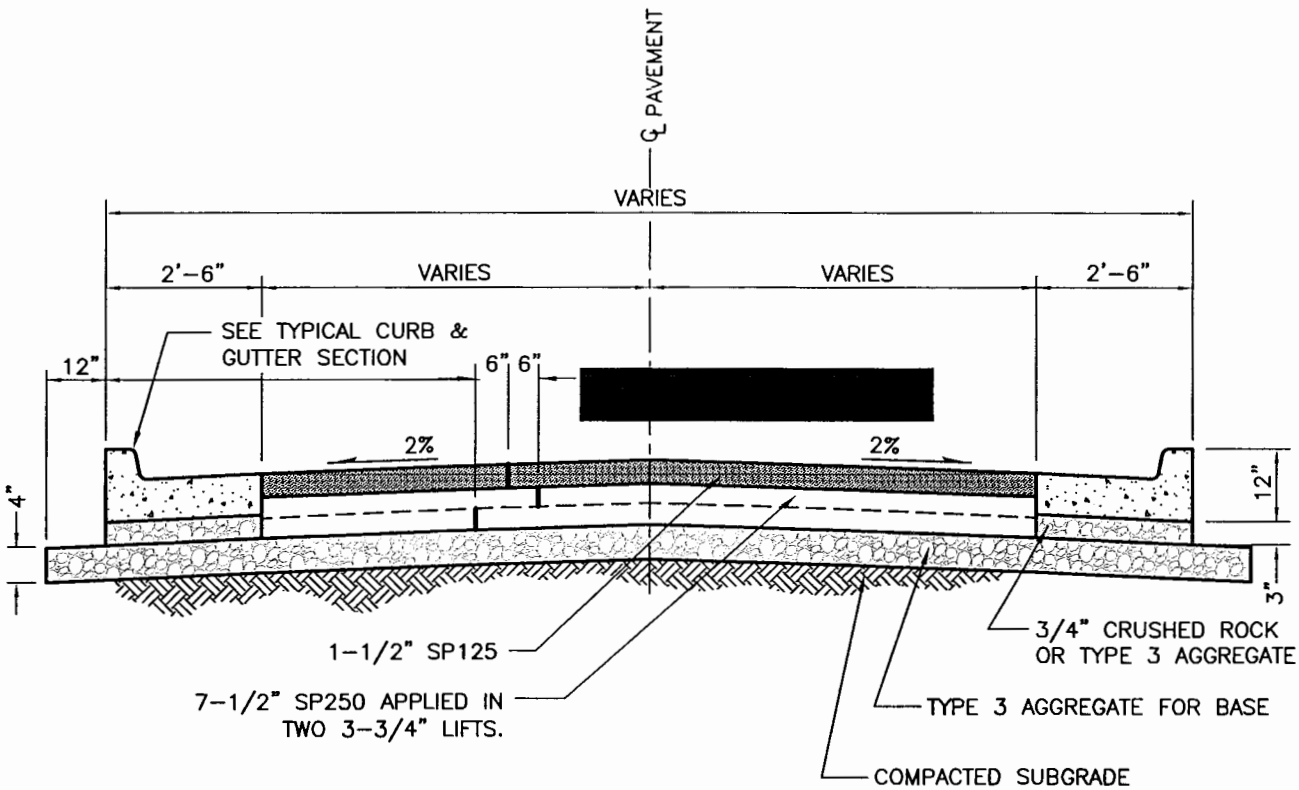

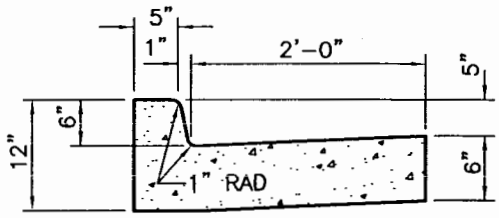

TYPICAL CURB AND GUTTER SECTION

NOTES:

1. ALL P.C. CONCRETE SHALL BE MoDOT PAVEMENT CONCRETE.
2. INSTALL 1/2" EXPANSION JOINTS IN CURB AND GUTTER SECTION AT P.C. AND P.T. OF CURB RADIUS OF INTERSECTIONS AND EVERY 150'.
3. INSTALL SAW JOINTS IN CURB AND GUTTER SECTION AT 10 FT. MAXIMUM SPACING, SEAL WITH BITUMASTIC JOINT SEALANT.
4. 4% PARABOLIC CROWN IS ACCEPTABLE IN LIEU OF 2% NORMAL CROWN.

Approved 10/01/16 Date	City of Columbia Public Works Department	COLLECTOR STREET (Asphaltic Pavement)	320.01
Revisions			

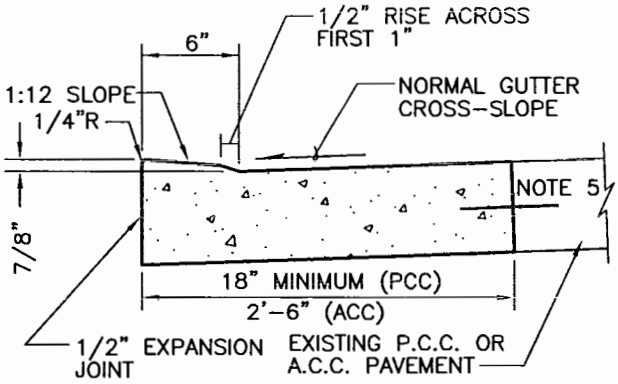

SIDEWALK RAMP CURB
(Alternate)

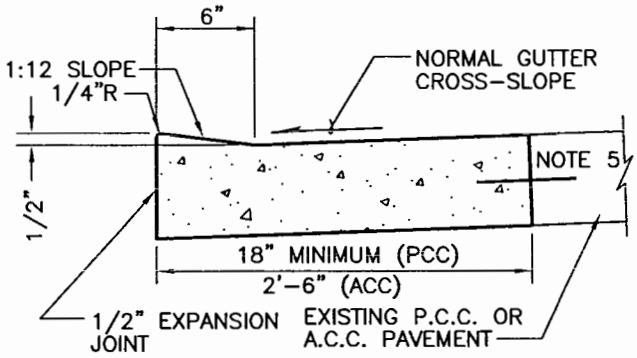

SIDEWALK RAMP CURB

PCC PAVEMENT NOTES:

1. CONCRETE SHALL BE MoDOT PAVEMENT CONCRETE.
2. PAVEMENT THICKNESS SHALL MATCH EXISTING. BASE SHALL MATCH EXISTING
3. EXPANSION JOINTS AND CONTRACTION JOINTS SHALL BE PLACED AT LOCATIONS SIMILAR TO THE PAVEMENT WHICH WAS REMOVED.
4. CURB EDGE SHALL BE TOOLED WITH 1/4" RADIUS
5. WHERE EXISTING PAVEMENT IS P.C.C., LOW CURB REPLACEMENT SHALL BE DOWELLED INTO EXISTING. 12" LONG #4 BARS AT 24" CTR. ALL DRILLED DOWEL BARS SHALL BE EXPOXIED.

ACC PAVEMENT NOTES:

1. CONCRETE SHALL BE MoDOT PAVEMENT CONCRETE.
2. GUTTER THICKNESS SHALL MATCH EXISTING, BASE SHALL MATCH EXISTING
3. EXPANSION JOINTS AND CONTRACTION JOINTS SHALL BE PLACED AT LOCATIONS SIMILAR TO THE CURB AND GUTTER WHICH WAS REMOVED.
4. CURB EDGE SHALL BE TOOLED WITH 1/4" RADIUS

Approved 10/01/16 Date	City of Columbia Public Works Department	CURB DETAILS (Sidewalk Ramp)	400.01
Revisions			

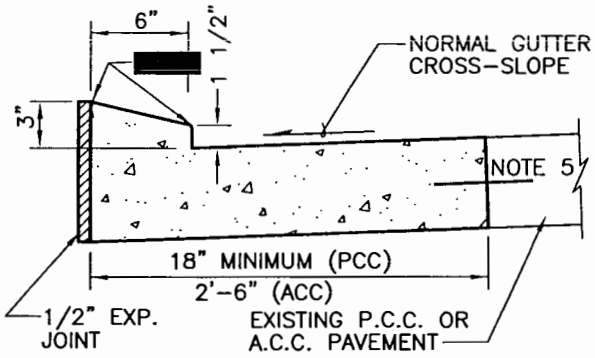

RESIDENTIAL DRIVEWAY CURB

MAXIMUM RISE (PREFERED)

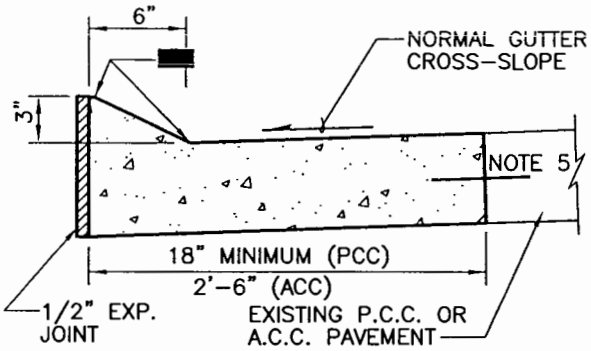

RESIDENTIAL DRIVEWAY CURB

MAXIMUM RISE (ALTERNATE)

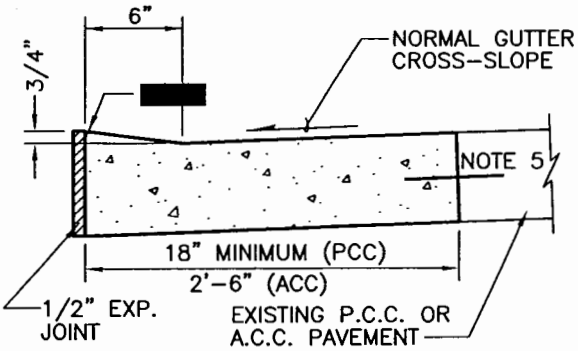

RESIDENTIAL DRIVEWAY CURB

MINIMUM RISE

GENERAL NOTES:

1. ELEVATION OF DRIVEWAY AT R.O.W. LINE REQUIRED TO BE A MINIMUM OF 6" ABOVE GUTTER ELEVATION. VERIFY R.O.W. WIDTH AND ALLOWABLE DRIVEWAY SLOPES PRIOR TO CONSTRUCTING MINIMUM RISE DRIVEWAY CURB.
2. ALTERNATE CURB PROFILES WHICH FALL WITHIN THE MINIMUM RISE AND MAXIMUM RISE CURBS SHOWN WILL BE APPROVED. SLOPE ACROSS RESIDENTIAL DRIVEWAY CURB TOP MUST BE AT LEAST 1/2" IN 6" TOWARD THE STREET.
3. HORIZONTAL SAWING OF CURB IS ALLOWED AS AN ALTERNATIVE TO REMOVING AND REPLACING STANDARD CURB. HORIZONTAL SAWING MACHINE AND METHOD REQUIRES PRIOR APPROVAL. HORIZONTAL SAWING IS NOT ALLOWED ON CITY BID PROJECTS.

PCC PAVEMENT NOTES:

1. CONCRETE SHALL BE MoDOT PAVEMENT CONCRETE.
2. PAVEMENT THICKNESS SHALL MATCH EXISTING. BASE SHALL MATCH EXISTING
3. EXPANSION JOINTS AND CONTRACTION JOINTS SHALL BE PLACED AT LOCATIONS SIMILAR TO THE PAVEMENT WHICH WAS REMOVED.
4. CURB EDGE SHALL BE TOOLED WITH 1/4" RADIUS
5. WHERE EXISTING PAVEMENT IS P.C.C., LOW CURB REPLACEMENT SHALL BE DOWELLED INTO EXISTING. 12" LONG #4 BARS AT 24" CTR. ALL DRILLED DOWEL BARS SHALL BE EXPOXIED.

ACC PAVEMENT NOTES:

1. CONCRETE SHALL BE MoDOT PAVEMENT CONCRETE.
2. GUTTER THICKNESS SHALL MATCH EXISTING, BASE SHALL MATCH EXISTING
3. EXPANSION JOINTS AND CONTRACTION JOINTS SHALL BE PLACED AT LOCATIONS SIMILAR TO THE CURB AND GUTTER WHICH WAS REMOVED.
4. CURB EDGE SHALL BE TOOLED WITH 1/4" RADIUS

Approved 10/01/16 Date Revisions	City of Columbia Public Works Department	CURB DETAILS (Residential Driveway)	400.02

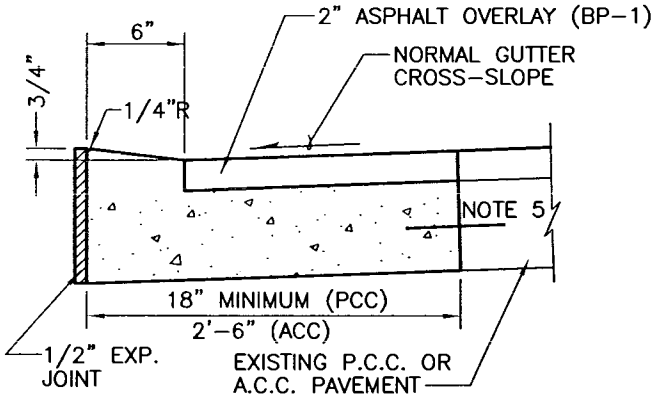

COMMERCIAL DRIVEWAY CURB AT ASPHALT OVERLAID STREET

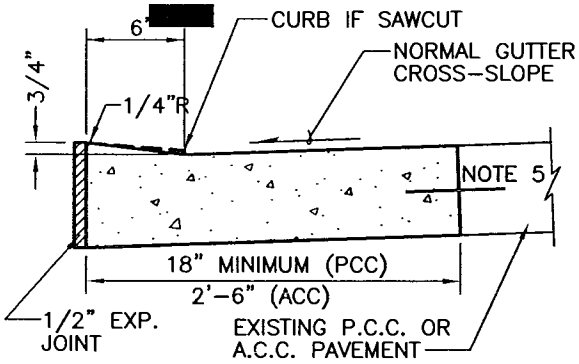

COMMERCIAL DRIVEWAY CURB

HORIZONTAL SAWING OF CURB IS ALLOWED AS AN ALTERNATIVE TO REMOVING AND REPLACING STANDARD CURB. HORIZONTAL SAWING MACHINE AND METHOD REQUIRES PRIOR APPROVAL. HORIZONTAL SAWING IS NOT ALLOWED ON CITY BID PROJECTS.

PCC PAVEMENT NOTES:

1. CONCRETE SHALL BE MoDOT PAVEMENT CONCRETE.
2. PAVEMENT THICKNESS SHALL MATCH EXISTING. BASE SHALL MATCH EXISTING
3. EXPANSION JOINTS AND CONTRACTION JOINTS SHALL BE PLACED AT LOCATIONS SIMILAR TO THE PAVEMENT WHICH WAS REMOVED.
4. CURB EDGE SHALL BE TOOLED WITH 1/4" RADIUS
5. WHERE EXISTING PAVEMENT IS P.C.C., LOW CURB REPLACEMENT SHALL BE DOWELLED INTO EXISTING. 12" LONG #4 BARS AT 24" CTR. ALL DRILLED DOWEL BARS SHALL BE EXPOXIED.

ACC PAVEMENT NOTES:

1. CONCRETE SHALL BE MoDOT PAVEMENT CONCRETE.
2. GUTTER THICKNESS SHALL MATCH EXISTING, BASE SHALL MATCH EXISTING
3. EXPANSION JOINTS AND CONTRACTION JOINTS SHALL BE PLACED AT LOCATIONS SIMILAR TO THE CURB AND GUTTER WHICH WAS REMOVED.
4. CURB EDGE SHALL BE TOOLED WITH 1/4" RADIUS

Approved 10/01/16 Date	City of Columbia Public Works Department	CURB DETAILS (Commercial Driveway)	400.03
Revisions			

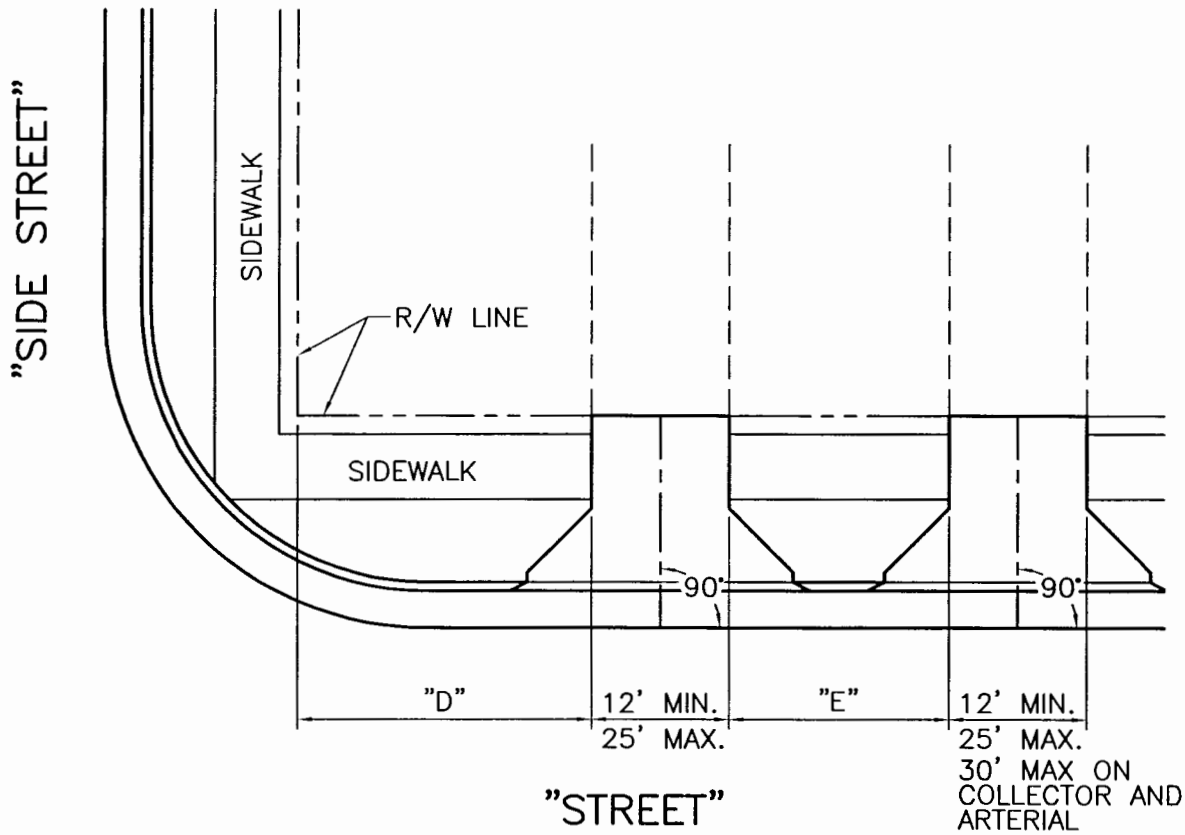

TYPE OF STREET	MINIMUM DISTANCES	
	"D"	"E"
LOCAL RESIDENTIAL	20'	—
LOCAL NON-RESIDENTIAL	20'	20'
COLLECTOR	30'	30'
ARTERIAL	50'	75'

Approved 10/01/16 Date Revisions	City of Columbia Public Works Department	DRIVEWAY LOCATIONS	410.01

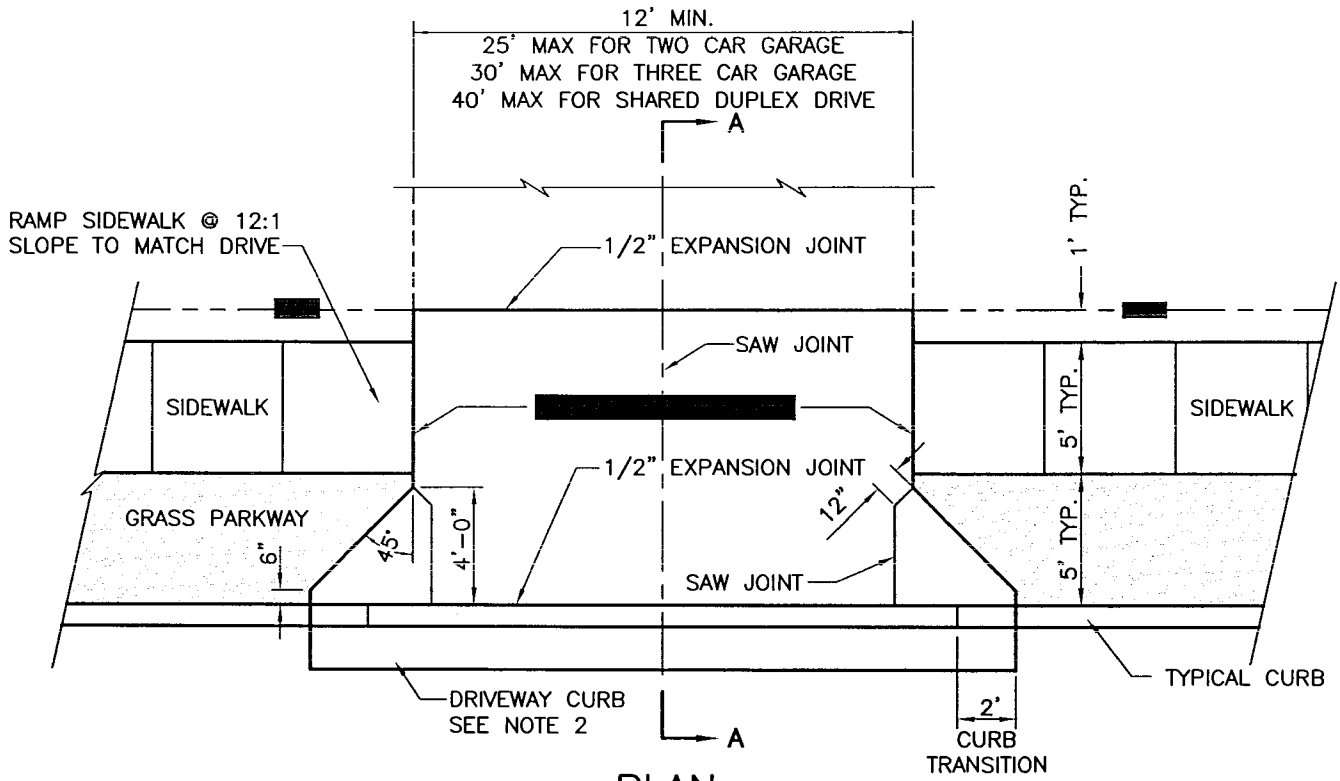

PLAN

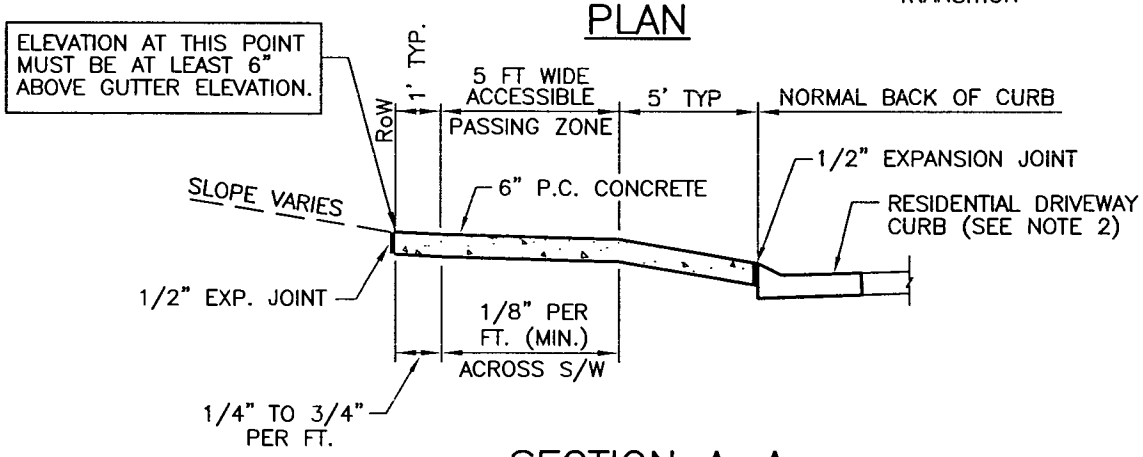

SECTION A–A

NOTES:

1. DRIVEWAY APPROACH SHALL BE 6" THICK MoDOT PAVEMENT CONCRETE ON COMPACTED SUBGRADE.
2. REPLACE STANDARD CURB & GUTTER SECTION WITH DRIVEWAY CURB SECTION. SEE DETAIL 400.02.
3. EXPANSION JOINT SHALL BE 1/2" PREFORMED CORK OR BITUMINOUS EXPANSION JOINT MATERIAL.
4. ALL DRIVEWAY APPROACHES SHALL SLOPE TOWARD THE STREET.
5. ALL DRIVEWAY APPROACHES SHALL BE CONSTRUCTED TO ACCOMMODATE SIDEWALKS. (EXISTING AND FUTURE) STANDARD SIDEWALK LOCATION IS 1 FT OFF OF RoW LINE
6. DRIVEWAY APPROACH SHALL PROVIDE A MINIMUM 5' WIDE ACCESSIBLE SIDEWALK PASSING ZONE.
7. DRIVEWAY SLOPE ACROSS ACCESSIBLE SIDEWALK PASSING ZONE IS 1/8" PER FT. CROSS SLOPE SHALL NOT EXCEED 2.00%.
8. MINIMIZE SIDEWALK WARPING ADJACENT TO DRIVEWAY APPROACH.
9. GREENSPACE SLOPE WITHIN RIGHT OF WAY SHALL NOT EXCEED 3/4" PER FOOT.
10. DRIVEWAY MAY BE REINFORCED AT OWNER'S OPTION. ON CITY BID PROJECTS DO NOT REINFORCE.
11. MEASURE FROM TOP OF CURB.

Approved 10/01/16 Date	City of Columbia Public Works Department	DRIVEWAY (Residential, 28' street)	410.02A
Revisions			

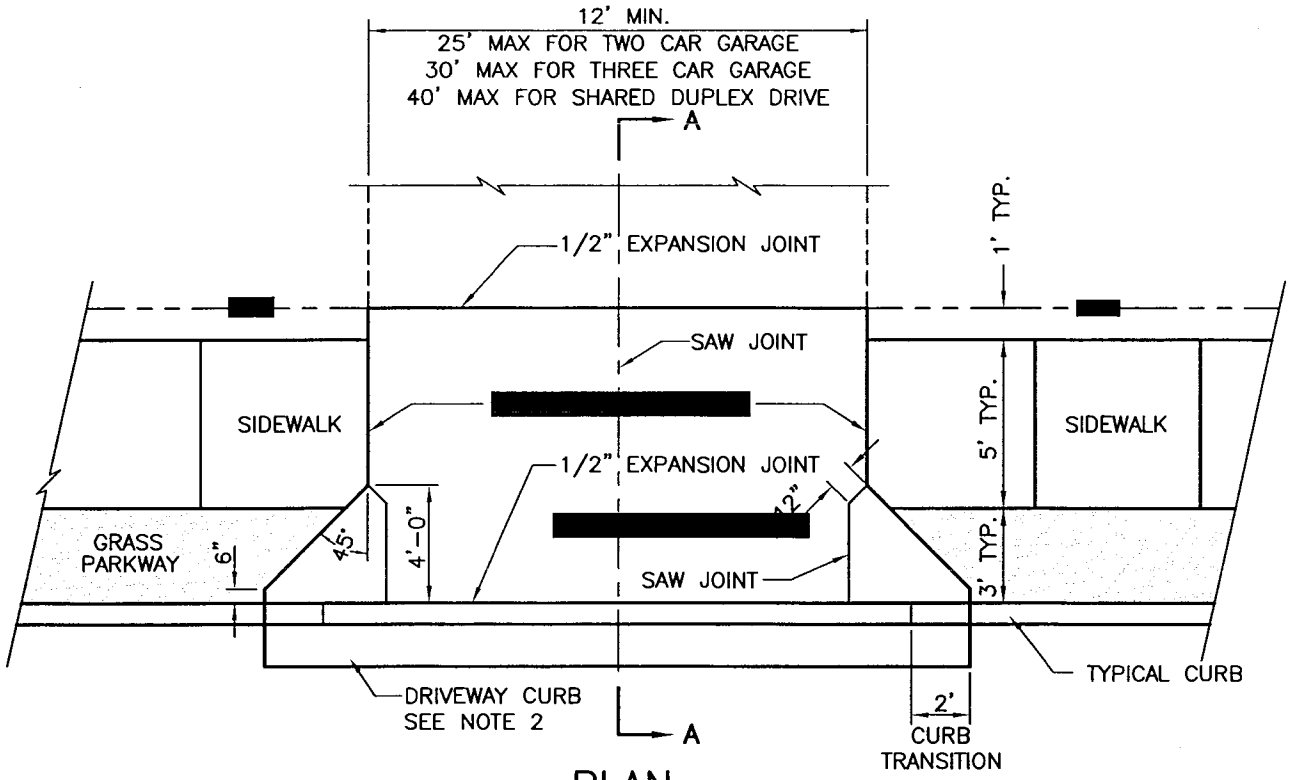

PLAN

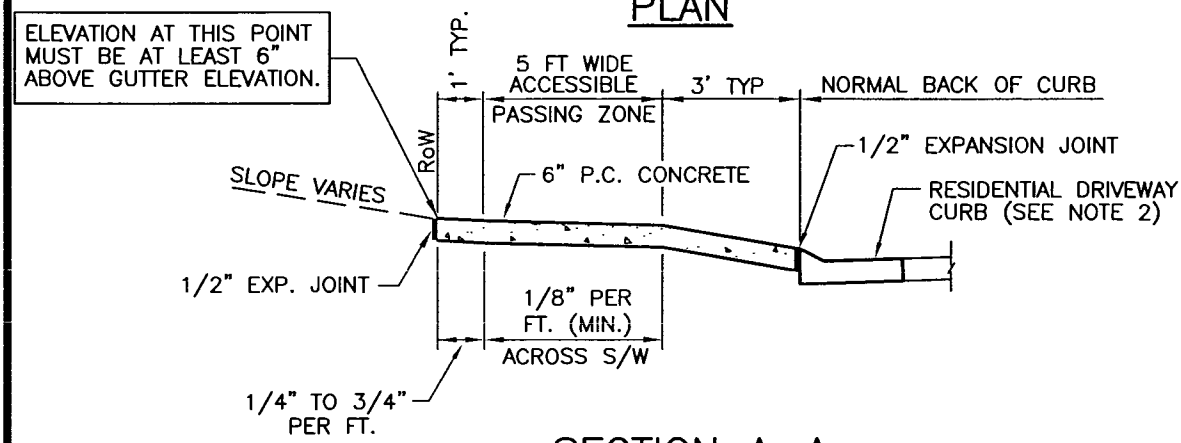

SECTION A–A

NOTES:

1. DRIVEWAY APPROACH SHALL BE 6" THICK MoDOT PAVEMENT CONCRETE ON COMPACTED SUBGRADE.
2. REPLACE STANDARD CURB & GUTTER SECTION WITH DRIVEWAY CURB SECTION. SEE DETAIL 400.02.
3. EXPANSION JOINT SHALL BE 1/2" PREFORMED CORK OR BITUMINOUS EXPANSION JOINT MATERIAL.
4. ALL DRIVEWAY APPROACHES SHALL SLOPE TOWARD THE STREET.
5. ALL DRIVEWAY APPROACHES SHALL BE CONSTRUCTED TO ACCOMMODATE SIDEWALKS. (EXISTING AND FUTURE) STANDARD SIDEWALK LOCATION IS 1 FT OFF OF RoW LINE
6. DRIVEWAY APPROACH SHALL PROVIDE A MINIMUM 5' WIDE ACCESSIBLE SIDEWALK PASSING ZONE.
7. DRIVEWAY SLOPE ACROSS ACCESSIBLE SIDEWALK PASSING ZONE IS 1/8" PER FT. CROSS SLOPE SHALL NOT EXCEED 2.00%.
8. MINIMIZE SIDEWALK WARPING ADJACENT TO DRIVEWAY APPROACH.
9. GREENSPACE SLOPE WITHIN RIGHT OF WAY SHALL NOT EXCEED 3/4" PER FOOT.
10. DRIVEWAY MAY BE REINFORCED AT OWNER'S OPTION. ON CITY BID PROJECTS DO NOT REINFORCE.
11. MEASURE FROM TOP OF CURB.

Approved 10/01/16 Date	City of Columbia Public Works Department	DRIVEWAY (Residential, 32' street)	410.02B
Revisions			

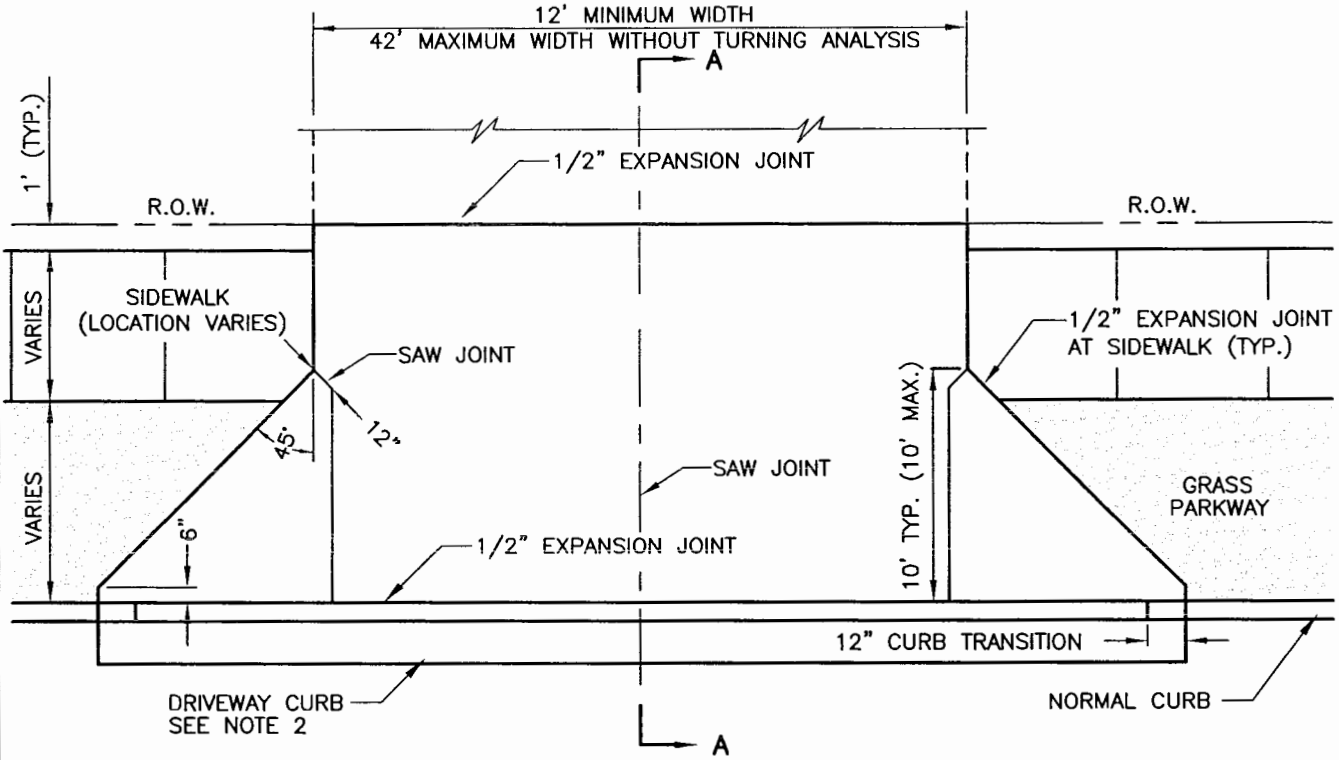

PLAN

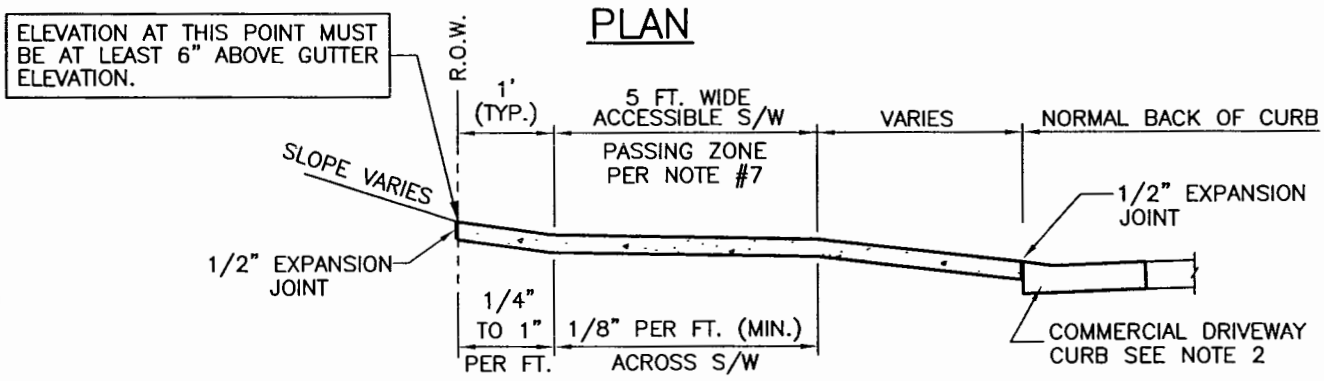

SECTION A–A

NOTES:

1. DRIVEWAY APPROACH SHALL BE 7" THICK MoDOT PAVEMENT CONCRETE.
2. REPLACE STANDARD CURB & GUTTER SECTION WITH DRIVEWAY CURB SECTION. SEE DETAIL 400.03.
3. EXPANSION JOINT SHALL BE 1/2" PREFORMED CORK OR BITUMINOUS EXPANSION JOINT MATERIAL.
4. ALL DRIVEWAY APPROACHES SHALL SLOPE TOWARD THE STREET.
5. ALL DRIVEWAY APPROACHES SHALL BE CONSTRUCTED TO ACCOMMODATE SIDEWALKS. (EXISTING AND FUTURE) STANDARD SIDEWALK LOCATION IS 1 FOOT OFF OF RIGHT OF WAY LINE.
6. DRIVEWAY APPROACH SHALL PROVIDE A MINIMUM 5' WIDE ACCESSIBLE SIDEWALK PASSING ZONE.
7. DRIVEWAY SLOPE ACROSS ACCESSIBLE SIDEWALK PASSING ZONE IS 1/8" PER FT. CROSS SLOPE SHALL NOT EXCEED 2.00%.
8. MINIMIZE SIDEWALK WARPING ADJACENT TO DRIVEWAY APPROACH.
9. GREENSPACE SLOPE WITHIN RIGHT OF WAY SHALL NOT EXCEED 3/4" PER FOOT.
10. DRIVEWAY MAY BE REINFORCED AT OWNER'S OPTION. ON CITY BID PROJECTS DO NOT REINFORCE.
11. MEASURE FROM TOP OF CURB.

Approved	10/01/16 Date	City of Columbia Public Works Department	DRIVEWAY (Commercial)	410.03
Revisions				

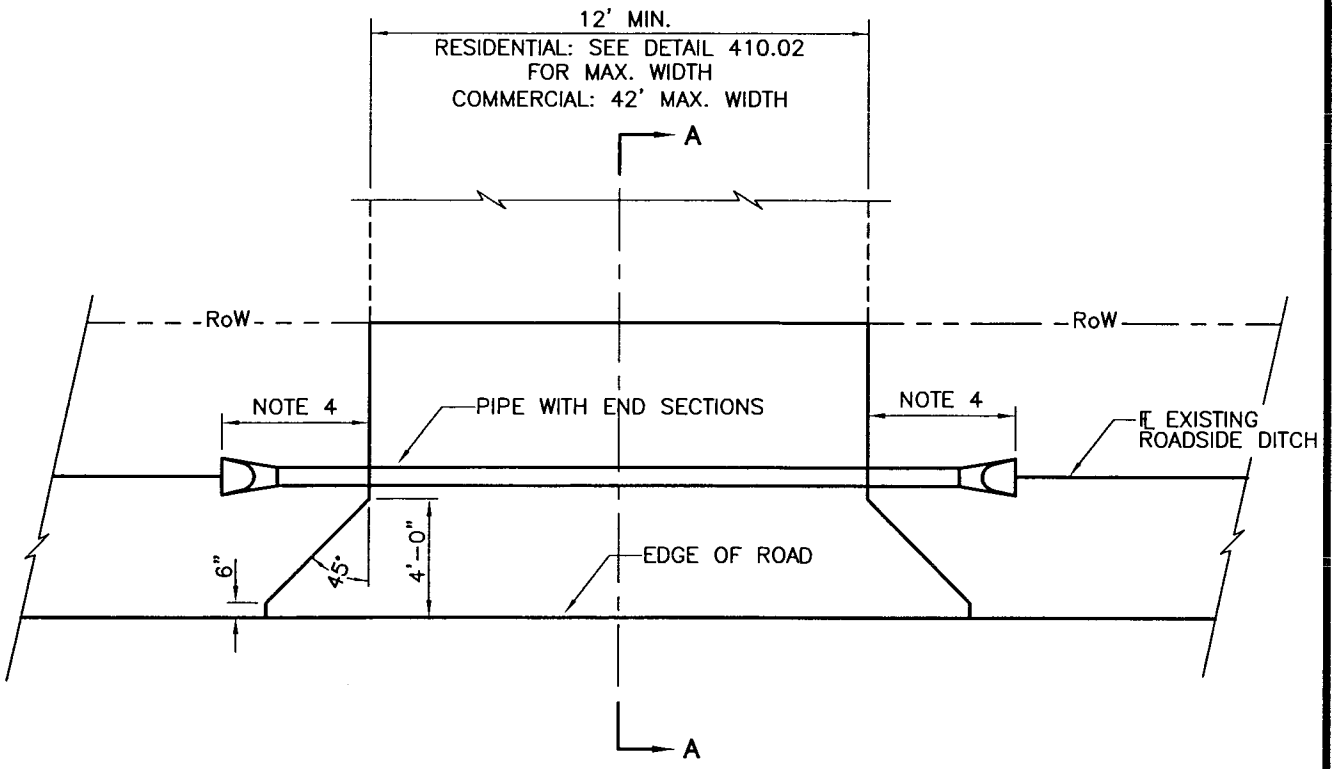

PLAN

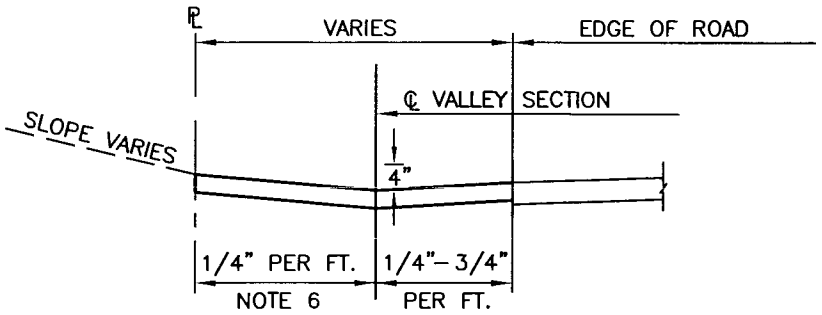

SECTION A–A

NOTES:

1. DRIVEWAY APPROACH SHALL BE 6" FULL DEPTH ASPHALTIC CEMENT CONCRETE OR MoDOT PAVEMENT CONCRETE
2. VALLEY SECTION REQUIRED, VALLEY SHALL BE 4" BELOW EDGE OF ROAD
3. PIPE UNDER DRIVEWAY SHALL BE SIZED TO CARRY 10 YR STORM, MINIMUM 12" DIAMETER.
4. PIPE LENGTH BASED ON 3:1 FILL SLOPE, USE FLARED END SECTION OR BEVEL END OF PIPE TO MATCH 3:1 SLOPE. HEADWALLS NOT ALLOWED.
5. WHERE THE ROADSIDE DITCH AT A DRIVEWAY DRAINS LESS THAN 10,000 SQ. FT. THE PIPE CAN BE OMITTED, INCREASE VALLEY SECTION DEPTH TO 6".
6. DRIVEWAYS SHALL PROVIDE FOR FUTURE SIDEWALKS AND ROAD IMPROVEMENTS, DRIVEWAY SLOPE BETWEEN VALLEY AND R.O.W. LINE SHALL NOT EXCEED 1/4" PER FOOT.

Approved	10/01/16 Date	City of Columbia Public Works Department	DRIVEWAY (Unimproved Street)	410.04
Revisions				

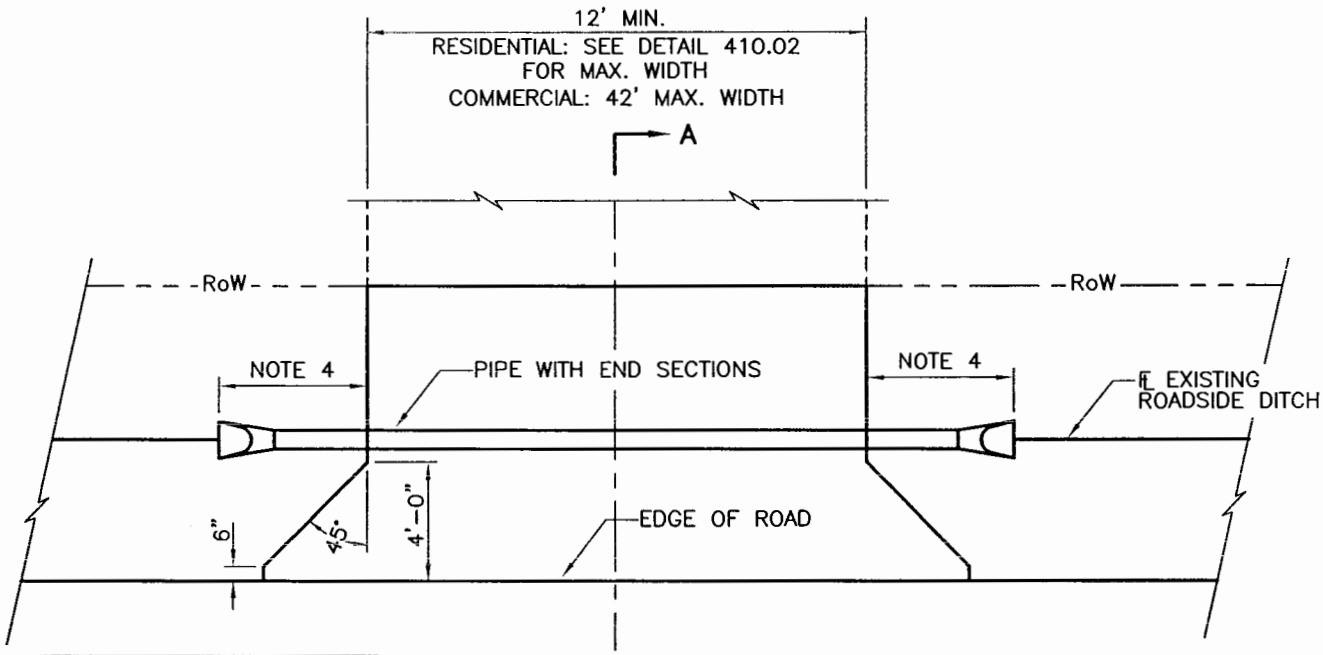

THIS DETAIL APPLIES ONLY TO DRIVE APPROACHES ABUTTING GRAVEL ROADS.

PLAN

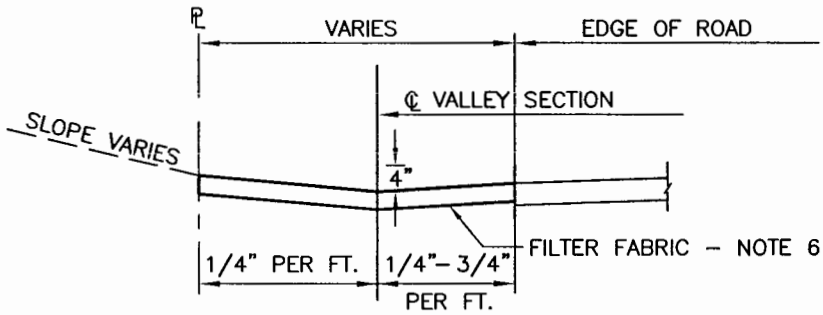

SECTION A–A

NOTE:

1. DRIVEWAY APPROACH SHALL BE A MINIMUM OF 8" OF 2 1/2" MINUS ROCK OR SHALL BE A MINIMUM OF 5" OF HOT MIX ASPHALT OR 6" OF MoDOT PAVEMENT CONCRETE. IN THE CASE OF A HARD SURFACED APPROACH, THE APPROACH SHALL BE SET BACK A MINIMUM OF 12" BEYOND EDGE OF ROAD.
2. VALLEY SECTION REQUIRED, VALLEY SHALL BE 4" BELOW EDGE OF ROAD
3. PIPE UNDER DRIVEWAY SHALL BE SIZED TO CARRY 10 YR STORM, MINIMUM 12" DIAMETER.
4. PIPE LENGTH BASED ON 3:1 FILL SLOPE, USE FLARED END SECTION OR BEVEL END OF PIPE TO MATCH 3:1 SLOPE. HEADWALLS NOT ALLOWED.
5. WHERE THE ROADSIDE DITCH AT A DRIVEWAY DRAINS LESS THAN 10,000 SQ. FT. THE PIPE CAN BE OMITTED, INCREASE VALLEY SECTION DEPTH TO 6".
6. INSTALL HEAVY GAUGE FILTER FABRIC (MIRAFI 180N OR EQUAL) UNDER ENTIRE DRIVE APPROACH.

Approved 10/01/16 Date Revisions	City of Columbia Public Works Department	DRIVEWAY (Gravel Roadways)	410.05

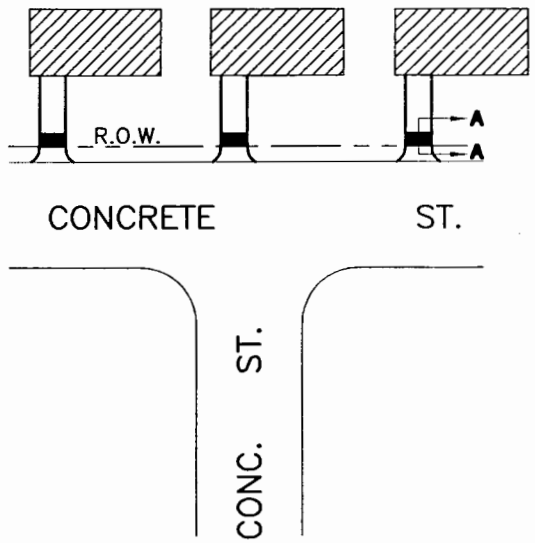

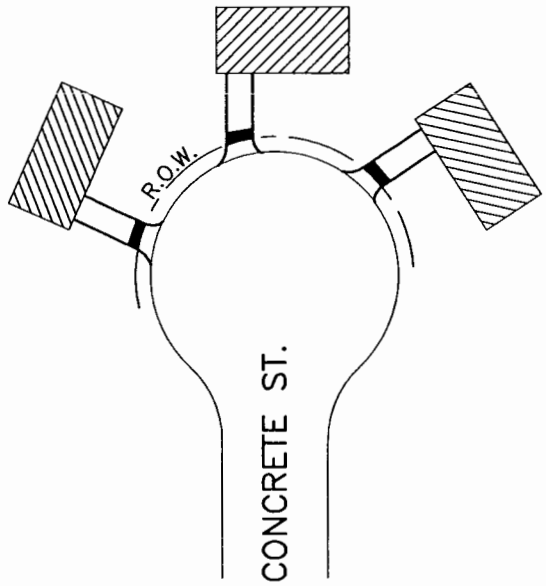

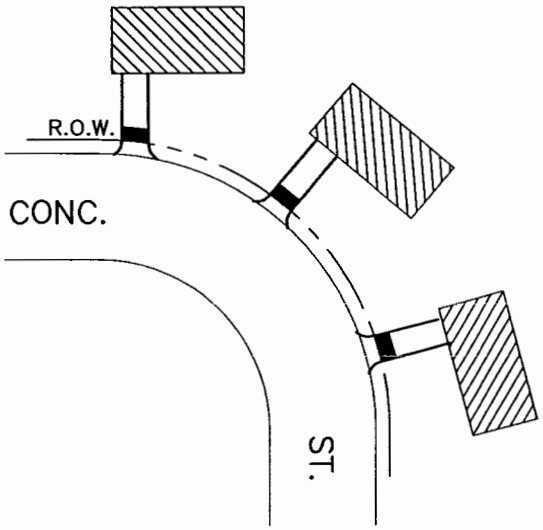

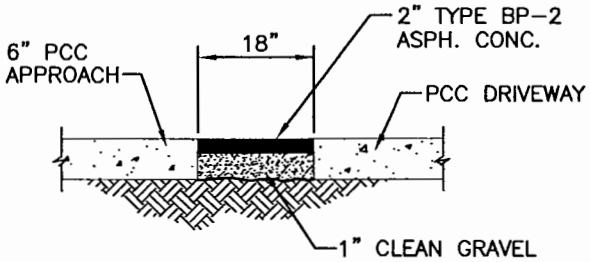

SECTION A–A

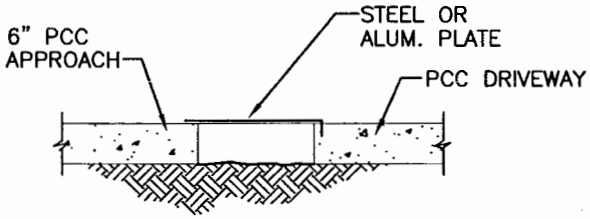

alt. SECTION A–A

THE MOVEMENT OVER TIME OF CONCRETE STREETS DUE PRIMARILY TO THE THERMAL EXPANSION AND CONTRACTION PROPERTIES OF CONCRETE HAS CAUSED DAMAGE TO PRIVATE RESIDENCES IN SOME NEW SUB-DIVISIONS IN COLUMBIA WHERE CONCRETE STREETS ARE USED.

IN ORDER TO CONTROL SUCH DAMAGE, THE CITY IS RECOMMENDING THE USE OF ONE OF THE JOINT DETAILS ABOVE WHEN THE DRIVEWAY IS LOCATED AS DEPICTED ON THIS DRAWING.

Approved 10/01/16 Date	City of Columbia Public Works Department	ALTERNATE EXPANSION JOINTS FOR DRIVEWAYS ON P.C.C. STREETS	410.06
Revisions			

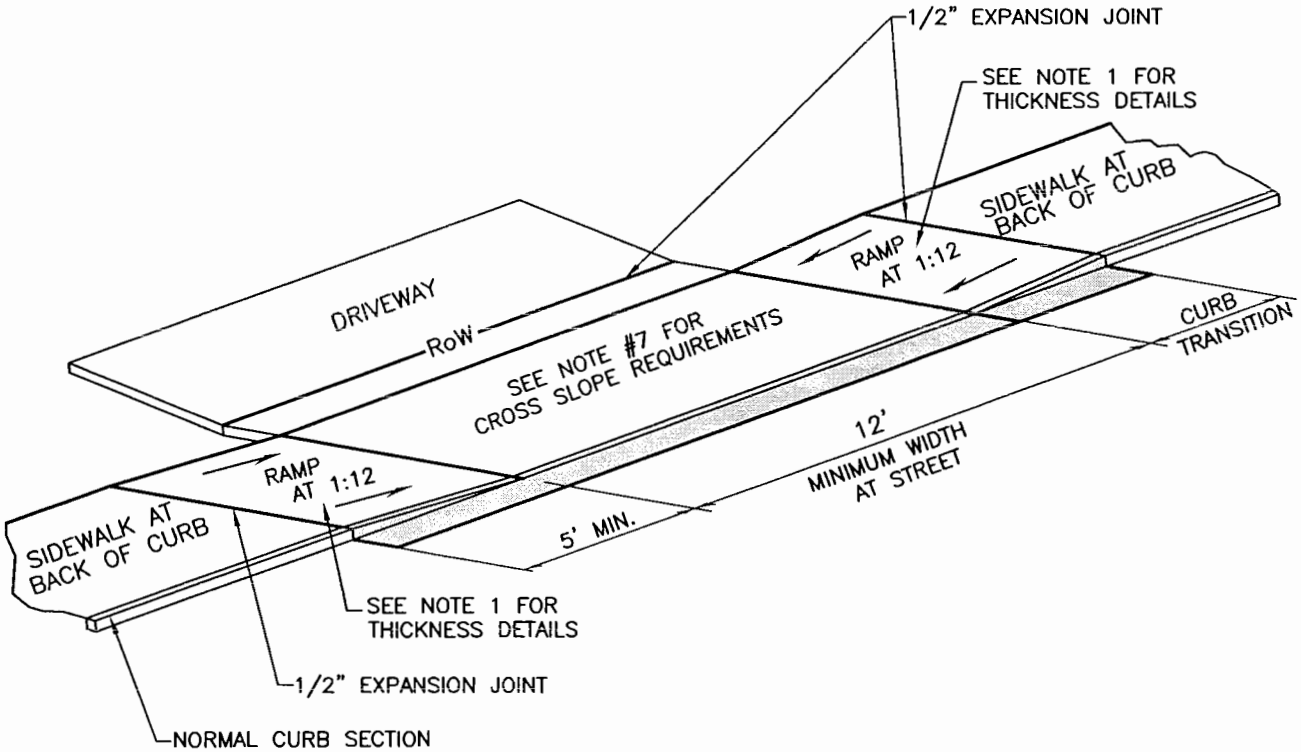

NOTE:

1. RAMP SHALL BE 6" THICK MoDOT PAVEMENT CONCRETE FOR RESIDENTIAL, 7" THICK MoDOT PAVEMENT CONCRETE FOR COMMERCIAL.
2. EXPANSION JOINT SHALL BE 1/2" PREFORMED CORK OR BITUMINOUS EXPANSION JOINT MATERIAL.
3. DRIVEWAY CROSS SLOPE SHALL NOT EXCEED 2.00%.
4. ALL SLOPES ARE MEASURED FROM THE HORIZONTAL.
5. REPLACE STANDARD CURB SECTION DRIVEWAY CURB SECTION – DETAIL 400.02 OR 400.03
6. RAMP LENGTH IS DEPENDENT UPON 1:12 MAX. SLOPE AT 5' MINIMUM TRANSITION AREA. USE FLATTER WHEN POSSIBLE.
7. A PEDESTRIAN ACCESSIBLE ROUTE SHALL BE PROVIDED THAT IS 4'–0" WIDE MINIMUM WITH A MINIMUM CROSS SLOPE OF 1/8" PER FOOT AND MAXIMUM CROSS SLOPE OF 2.00%.
8. DRIVEWAY MAY BE REINFORCED AT OWNERS OPTION. ON CITY BID PROJECTS DO NOT REINFORCE.

Approved	10/01/16 Date	City of Columbia Public Works Department	SIDEWALK DRIVEWAY DETAIL Sidewalk at Back of Curb	410.07
Revisions				

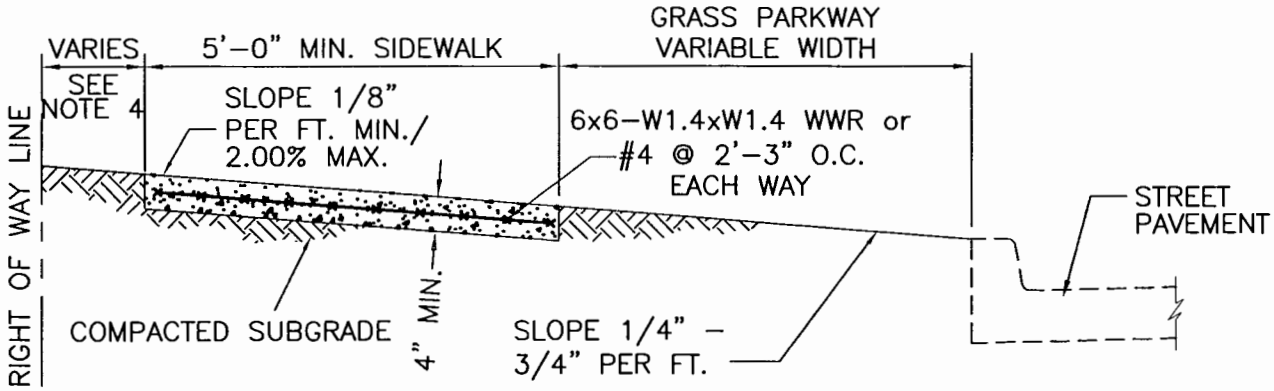

SIDEWALK WITH GRASS PARKWAY

NOTE:

1. SIDEWALK SHALL BE 4" THICK MoDOT PAVEMENT CONCRETE.
2. INSTALL 1/2" EXPANSION JOINTS AT INTERSECTIONS, RAMPS, STRUCTURES, DRIVEWAY APPROACHES, OR EVERY 100'.
3. INSTALL TRANSVERSE SAW JOINTS AT SPACING EQUAL TO SIDEWALK WIDTH.
4. STANDARD SIDEWALK PLACEMENT IS 12" FROM RIGHT OF WAY LINE.
5. NO STEEL TO BE PLACED THROUGH EXPANSION JOINT.
6. SIDEWALK CROSS SLOPE SHALL NOT EXCEED 2.00%.
7. DAMAGED SIDEWALK MUST BE PINNED TO EXISTING SIDEWALK.
8. WWR OR REBAR SHALL BE ACCURATELY PLACED AND FIRMLY HELD IN PLACE DURING CONCRETE PLACEMENT BY APPROVED METHODS, SEE SECTION 238.9.

Approved 10/01/16 Date	City of Columbia Public Works Department	SIDEWALK	420.01
Revisions			

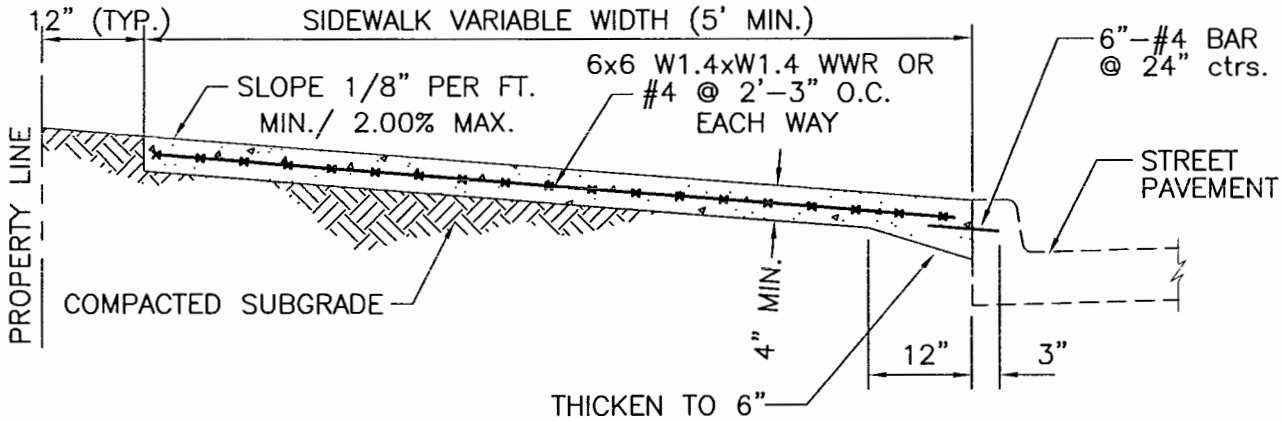

NOTE:

1. SIDEWALK SHALL BE 4" THICK MoDOT PAVEMENT CONCRETE.
2. INSTALL 1/2" TRANSVERSE EXPANSION JOINTS TO MATCH STREET OR CURB AND GUTTER EXPANSION JOINTS AND AT ALL DRIVEWAY APPROACHES, AND SIDEWALK RAMPS.
3. INSTALL TRANSVERSE SAW JOINTS AT SPACING EQUAL TO SIDEWALK WIDTH.
4. FOR DOWNTOWN SIDEWALK DETAIL SEE SECTION 1000.
5. NO STEEL TO BE PLACED THROUGH EXPANSION JOINT
6. SIDEWALK CROSS SLOPE SHALL NOT EXCEED 2.00%.
7. DAMAGED SIDEWALK MUST BE PINNED TO EXISTING SIDEWALK.
8. WWR OR REBAR SHALL BE ACCURATELY PLACED AND FIRMLY HELD IN PLACE DURING CONCRETE PLACEMENT BY APPROVED METHODS, SEE SECTION 238.9.

Approved 10/01/16 Date	City of Columbia Public Works Department	SIDEWALK AT BACK OF CURB	420.02
Revisions			

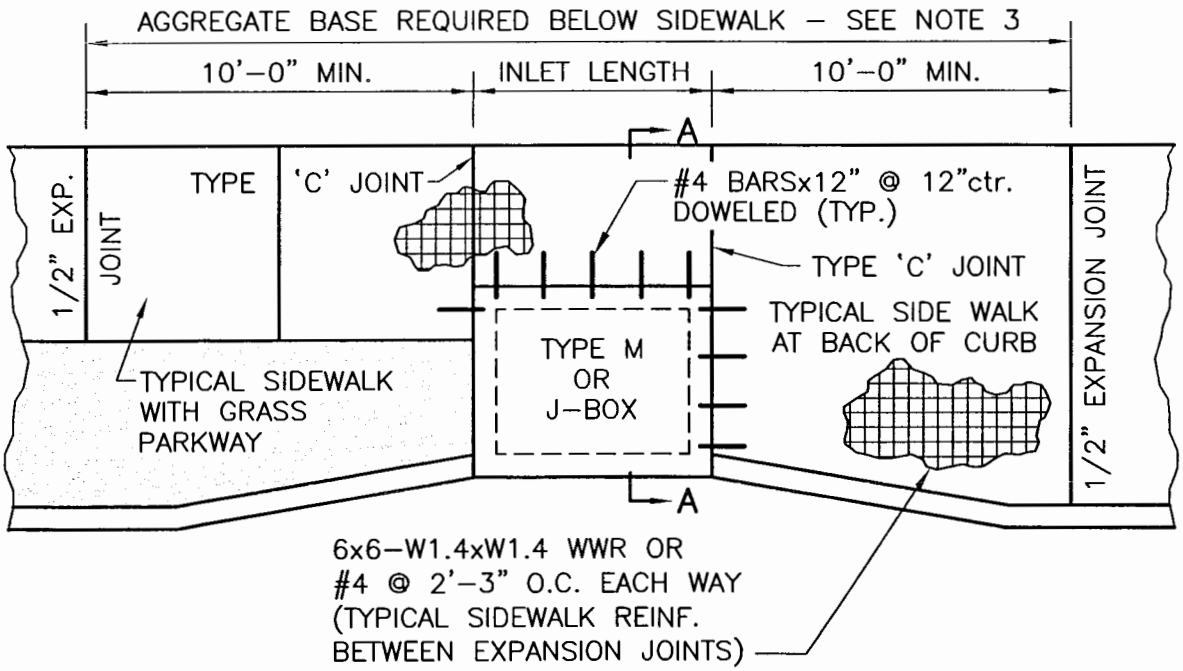

PLAN VIEW

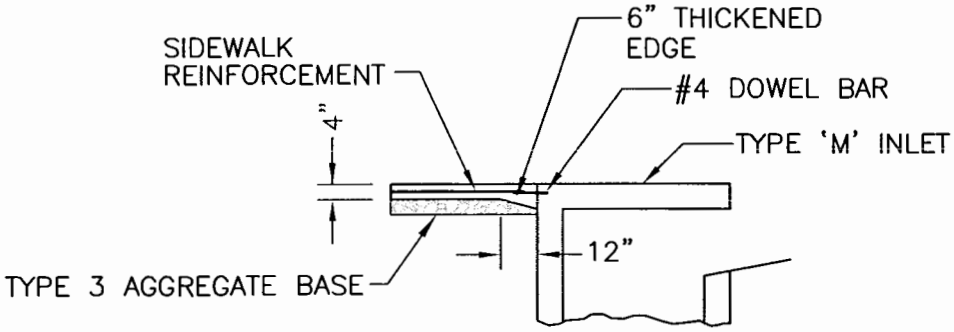

SECTION A–A

NOTES:

1. SIDEWALK SHALL BE 4" THICK MoDOT PAVEMENT CONCRETE
2. REINFORCING STEEL SHALL BE GRADE 60
3. 4" THICK PROPERLY PLACED TYPE 3 AGGREGATE BASE
4. ALL DRILLED DOWEL BARS SHALL BE EXPOXIED.

Approved 10/01/16 Date Revisions	City of Columbia Public Works Department	SIDEWALK REINFORCEMENT AT DRAINAGE STRUCTURE	420.03

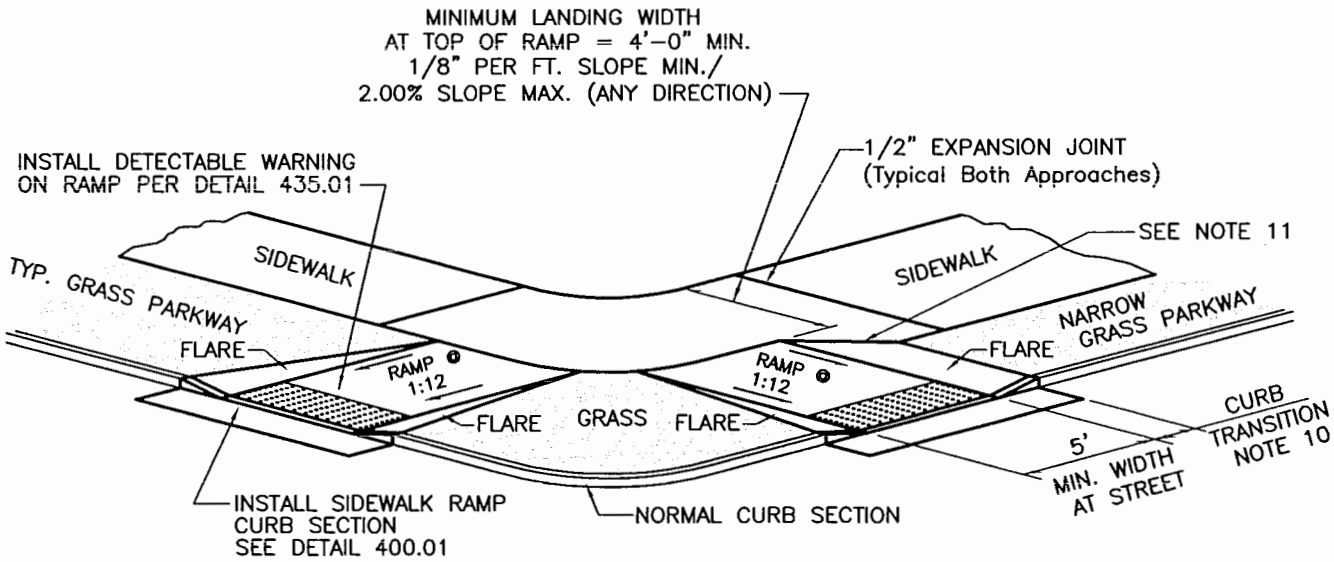

NOTE:

1. RAMP SHALL BE 6" THICK MoDOT PAVEMENT CONCRETE WITH #4 BARS @ 12" O.C. EACH WAY.
2. EXPANSION JOINT SHALL BE 1/2" PREFORMED CORK OR BITUMINOUS EXPANSION JOINT MATERIAL.
3. MAXIMUM RAMP CROSS SLOPE IS 2.00%.
4. ALL SLOPES ARE MEASURED FROM THE HORIZONTAL.
5. REPLACE STANDARD CURB SECTION WITH SIDEWALK RAMP CURB SECTION – DETAIL 400.01
6. RAMP LENGTH IS DEPENDENT ON 1:12 MAX. SLOPE. USE FLATTER WHEN POSSIBLE.
7. LANDING AREA AT TOP OF RAMP SHALL BE 4'-0" MIN WIDTH, CROSS SLOPE OF LANDING SHALL NOT EXCEED 2.00%, INCREASE SIDEWALK RADIUS TO OBTAIN MINIMUM 4'-0" LANDING.
8. TYPE "A" RAMP NOT APPLICABLE IF SIDEWALK AND PARKWAY WIDTH DOES NOT PROVIDE 4'-0" LANDING AT TOP OF RAMP.
9. FLARES ARE REQUIRED AT RAMPS TO KEEP GRASS PARKWAY SLOPES IN CONFORMANCE WITH THE TYPICAL CROSS SECTION.
10. CURB TRANSITION LENGTH IS DEPENDENT ON FLARE SLOPE
11. IF RAMP EXTENDS INTO NORMAL SIDEWALK, FLARE SLOPE MUST NOT EXCEED 1:10. A LANDING IS REQUIRED, SEE NOTE 7.

Approved 10/01/16 Date Revisions	City of Columbia Public Works Department	SIDEWALK RAMP Sidewalk with Grass Parkway (Type A)	430.01

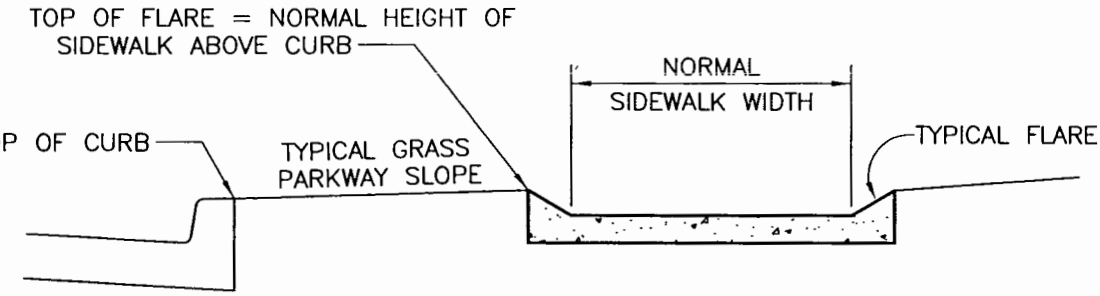

SECTION A–A

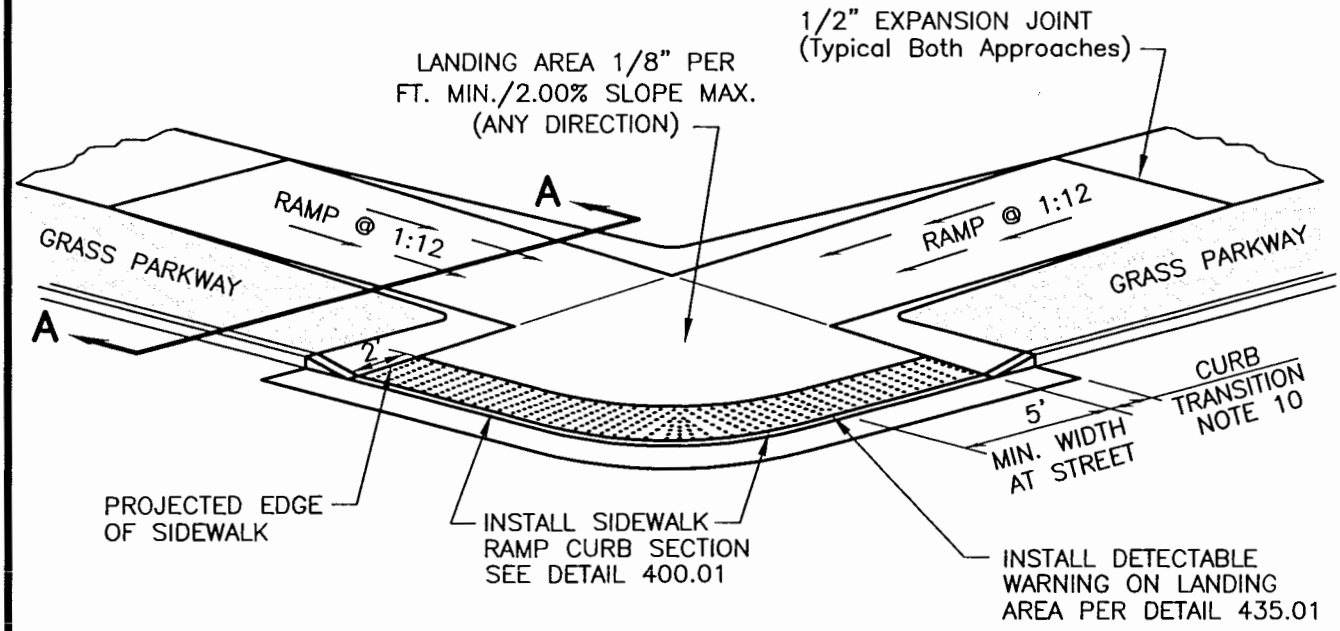

NOTES:

1. RAMP AND LANDING SHALL BE 6" THICK MoDOT PAVEMENT CONCRETE WITH #4 BARS AT 12" O.C. E.W.
2. EXPANSION JOINT SHALL BE 1/2" PREFORMED CORK OR BITUMINOUS EXPANSION JOINT MATERIAL.
3. MAXIMUM RAMP CROSS SLOPE IS 2.00%.
4. ALL SLOPES ARE MEASURED FROM THE HORIZONTAL.
5. REPLACE STANDARD CURB SECTION WITH SIDEWALK RAMP CURB SECTION – DETAIL 400.01
6. RAMP LENGTH IS DEPENDENT ON 1:12 MAX. SLOPE. USE FLATTER WHEN POSSIBLE.
7. LANDING AREA SHALL BE 4'–0" MIN WIDTH.
8. USE TYPE "B" RAMP ONLY IF TYPE "A" IS NOT FEASIBLE.
9. FLARES ARE REQUIRED AT RAMPS TO KEEP GRASS PARKWAY SLOPES IN CONFORMANCE WITH THE TYPICAL CROSS SECTION. (SEE SECTION A–A)
10. CURB TRANSITION LENGTH IS DEPENDENT ON FLARE SLOPE.

Approved 10/01/16 Date	City of Columbia Public Works Department	SIDEWALK RAMP Sidewalk with Grass Parkway (Type B)	430.02
Revisions			

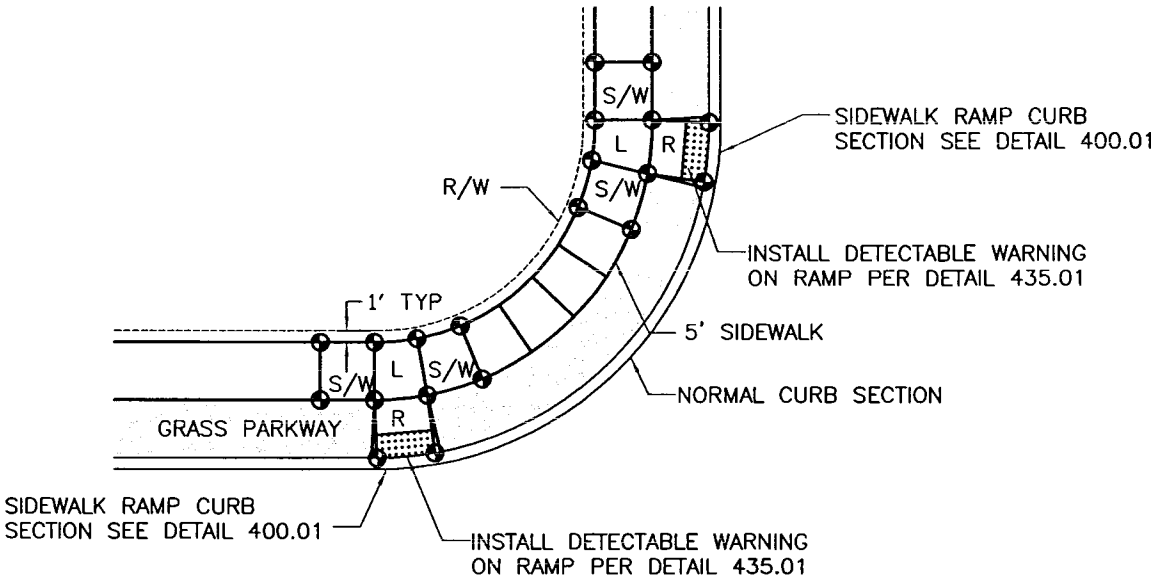

1. ⊕ DENOTES SPOT ELEVATION REQUIRED

TYPE "A" SIDEWALK WITH GRASS PARKWAY

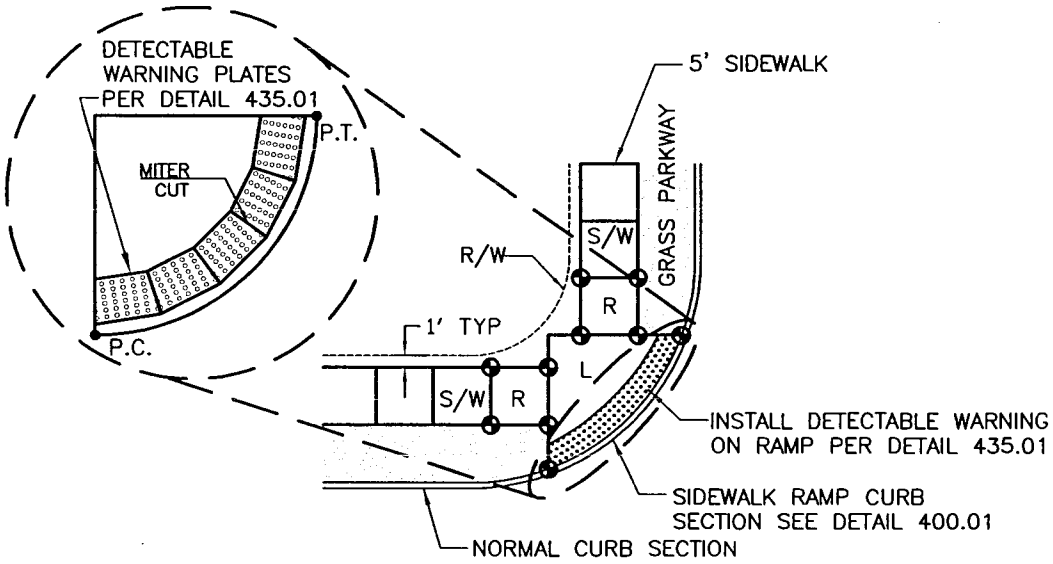

1. ⊕ DENOTES SPOT ELEVATION REQUIRED
2. DETECTABLE WARNING PLATES ARE TO BE MITERED EQUALLY ON BOTH SIDES TO BE FLUSH.

TYPE "B" SIDEWALK WITH GRASS PARKWAY

R = RAMP AT 1:12 RUNNING SLOPE MAX

L = LANDING AT 1/8" PER FT. SLOPE MIN./2.00% SLOPE MAX. (ANY DIRECTION)

S/W = SIDEWALK AT 1/8" PER FT. CROSS SLOPE MIN./2.00% CROSS SLOPE MAX.

Approved 10/01/16 Date	City of Columbia Public Works Department	SIDEWALK RAMP PLAN VIEW Sidewalk with Grass Parkway (Type A &B)	430.03
Revisions			

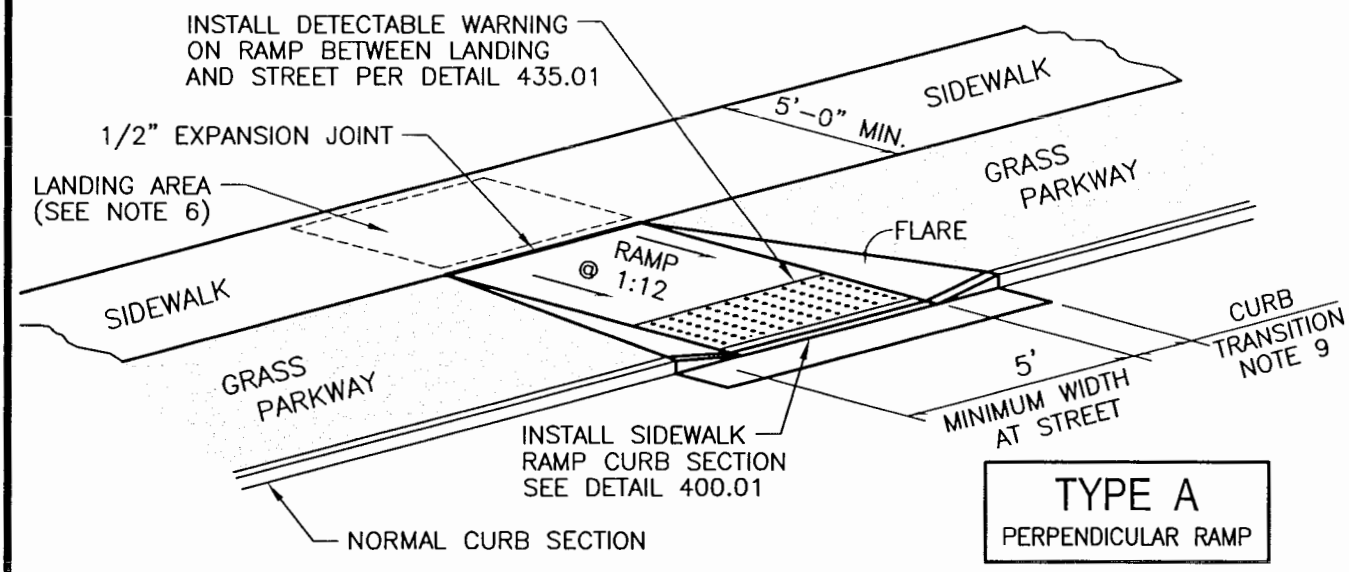

TYPE A
PERPENDICULAR RAMP

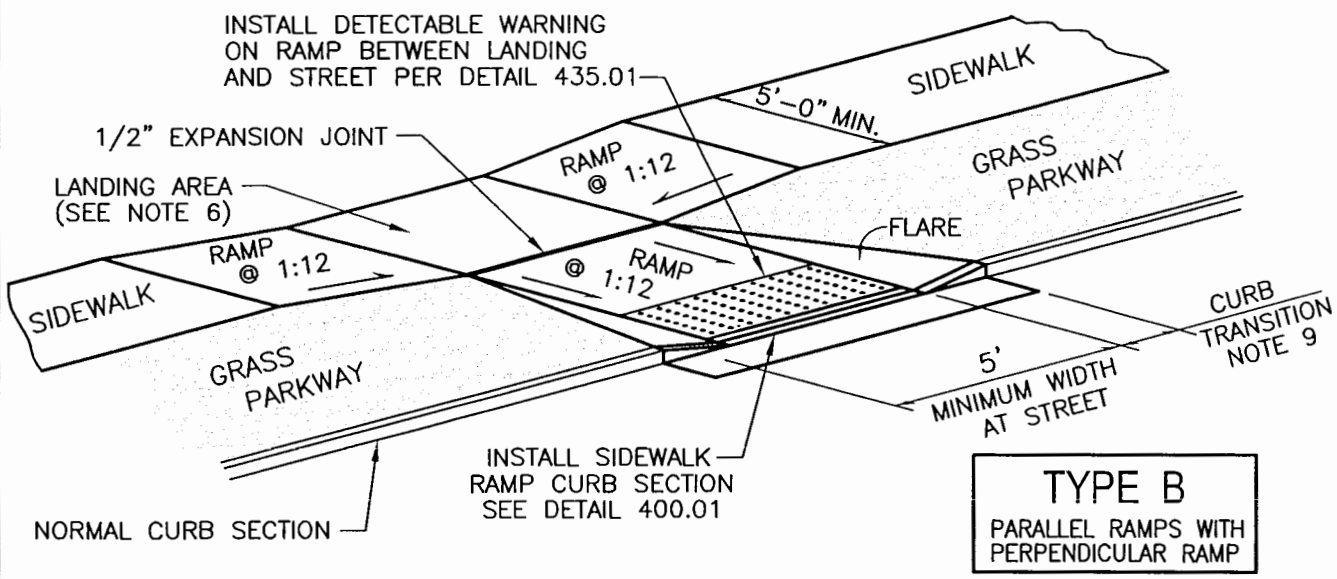

TYPE B
PARALLEL RAMPS WITH PERPENDICULAR RAMP

NOTE:

1. RAMP SHALL BE 6" THICK MoDOT PAVEMENT CONCRETE WITH #4 BARS AT 12" O.C. EACH WAY
2. EXPANSION JOINT SHALL BE 1/2" PREFORMED CORK OR BITUMINOUS EXPANSION JOINT MATERIAL.
3. ALL SLOPES ARE MEASURED FROM THE HORIZONTAL.
4. REPLACE STANDARD CURB SECTION WITH SIDEWALK RAMP CURB SECTION – DETAIL 400.01
5. RAMP LENGTH IS DEPENDENT ON 1:12 MAX. SLOPE. USE FLATTER WHEN POSSIBLE.
6. LANDING AREA AT TOP OF RAMP SHALL BE 4'-0" MIN. WIDTH. SLOPE OF LANDING SHALL BE 1/8" PER FT. MIN./2.00% MAX (ANY DIRECTION)
7. TYPE "A" RAMP NOT APPLICABLE IF PARKWAY WIDTH DOES NOT PROVIDE ENOUGH LENGTH FOR PERPENDICULAR RAMP AT 1:12 SLOPE.
8. FLARES ARE REQUIRED AT RAMPS TO KEEP GRASS PARKWAY SLOPES IN CONFORMANCE WITH THE TYPICAL CROSS SECTION.
9. CURB TRANSITION LENGTH IS DEPENDENT ON FLARE SLOPE.

Approved 10/01/16 Date Revisions	City of Columbia Public Works Department	MIDBLOCK SIDEWALK RAMP Sidewalk with Grass Parkway	431.01

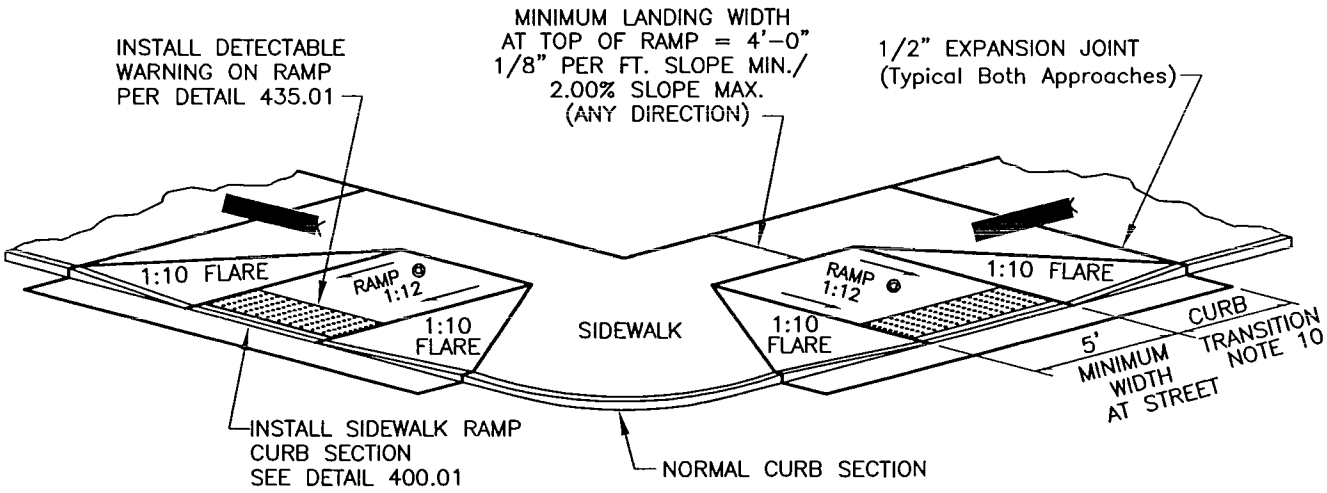

NOTE:

1. RAMP SHALL BE 6" THICK MoDOT PAVEMENT CONCRETE WITH #4 BARS AT 12" O.C. E.W.
2. EXPANSION JOINT SHALL BE 1/2" PREFORMED CORK OR BITUMINOUS EXPANSION JOINT MATERIAL.
3. MAXIMUM RAMP CROSS SLOPE IS 2.00%.
4. ALL SLOPES ARE MEASURED FROM THE HORIZONTAL.
5. REPLACE STANDARD CURB SECTION WITH SIDEWALK RAMP CURB SECTION – DETAIL 400.01
6. RAMP LENGTH IS DEPENDENT ON 1:12 MAX. SLOPE. USE FLATTER WHEN POSSIBLE.
7. LANDING AREA AT TOP OF RAMP SHALL BE 4'-0" MIN WIDTH, CROSS SLOPE OF LANDING SHALL NOT EXCEED 2.00%.
8. TYPE "A" RAMP NOT APPLICABLE IF SIDEWALK WIDTH DOES NOT PROVIDE 4'-0" LANDING AT THE TOP OF RAMP. USE TYPE "B" RAMP.
9. RAMP EXTENDS INTO SIDEWALK, FLARE SLOPE MUST NOT EXCEED 1:10.
10. CURB TRANSITION LENGTH IS DEPENDENT ON 1:10 FLARE SLOPE

Approved 10/01/16 Date	City of Columbia Public Works Department	SIDEWALK RAMP Sidewalk at Back of Curb (Type A)	432.01
Revisions			

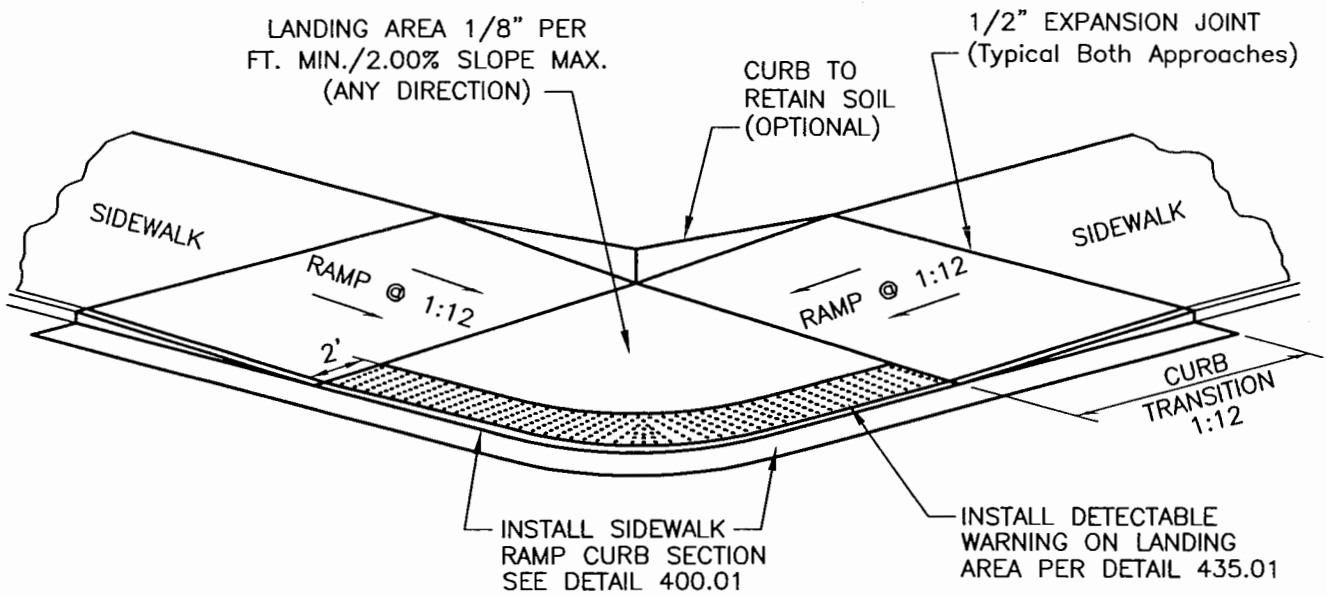

NOTES:

1. RAMP AND LANDING SHALL BE 6" THICK REINFORCED MoDOT PAVEMENT CONCRETE W/#4 BARS @ 12" O.C.
2. EXPANSION JOINT SHALL BE 1/2" PREFORMED CORK OR BITUMINOUS EXPANSION JOINT MATERIAL.
3. MAXIMUM RAMP CROSS SLOPE IS 2.00%.
4. ALL SLOPES ARE MEASURED FROM THE HORIZONTAL.
5. REPLACE STANDARD CURB SECTION WITH SIDEWALK RAMP CURB SECTION – DETAIL 400.01
6. RAMP LENGTH IS DEPENDENT ON 1:12 MAX. SLOPE. USE FLATTER WHEN POSSIBLE.
7. LANDING AREA SHALL BE 4'–0" MIN WIDTH.
8. USE TYPE "B" RAMP ONLY IF TYPE "A" IS NOT FEASIBLE.

Approved 10/01/16 Date Revisions	City of Columbia Public Works Department	SIDEWALK RAMP Sidewalk at Back of Curb (Type B)	432.02

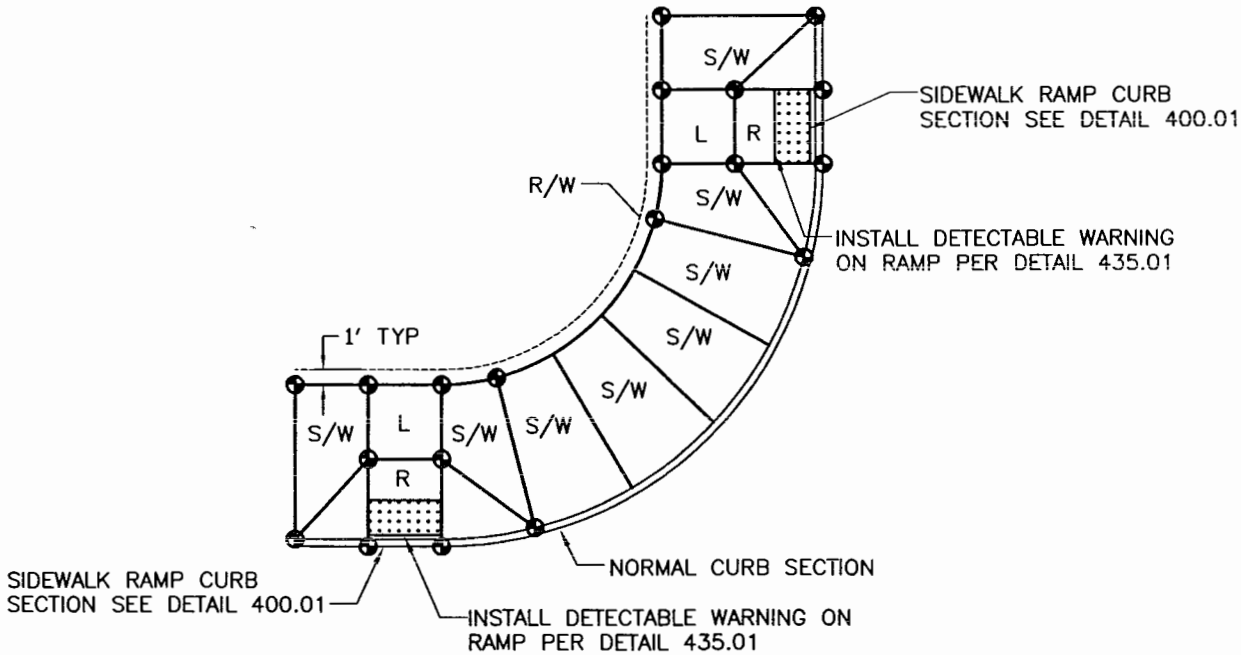

1. ⊕ DENOTES SPOT ELEVATION REQUIRED

TYPE "A" SIDEWALK AT BACK OF CURB

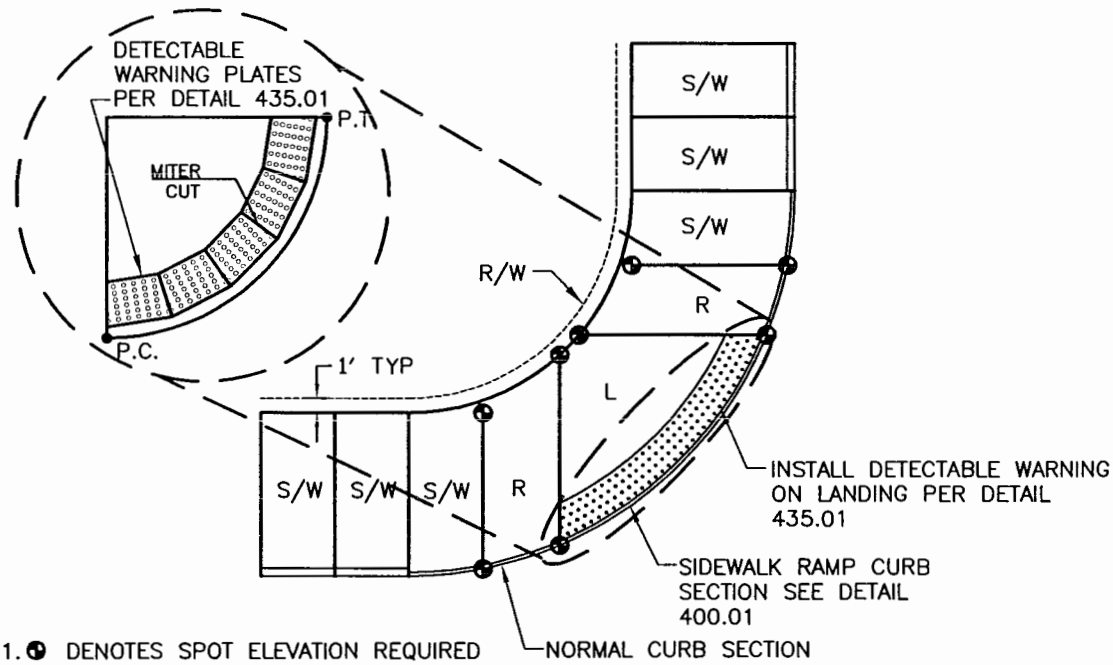

1. ⊕ DENOTES SPOT ELEVATION REQUIRED
2. DETECTABLE WARNING PLATES ARE TO BE MITERED EQUALLY ON BOTH SIDES TO BE FLUSH.

TYPE "B" SIDEWALK AT BACK OF CURB

R = RAMP AT 1:12 RUNNING SLOPE MAX

L = LANDING AT 1/8" PER FT. SLOPE MIN./2.00% SLOPE MAX. (ANY DIRECTION)

S/W = SIDEWALK AT 1/8" PER FT. CROSS SLOPE MIN./2.00% CROSS SLOPE MAX.

Approved 10/01/16 Date Revisions	City of Columbia Public Works Department	SIDEWALK RAMP PLAN VIEW Sidewalk at Back of Curb (Type A & B)	432.03

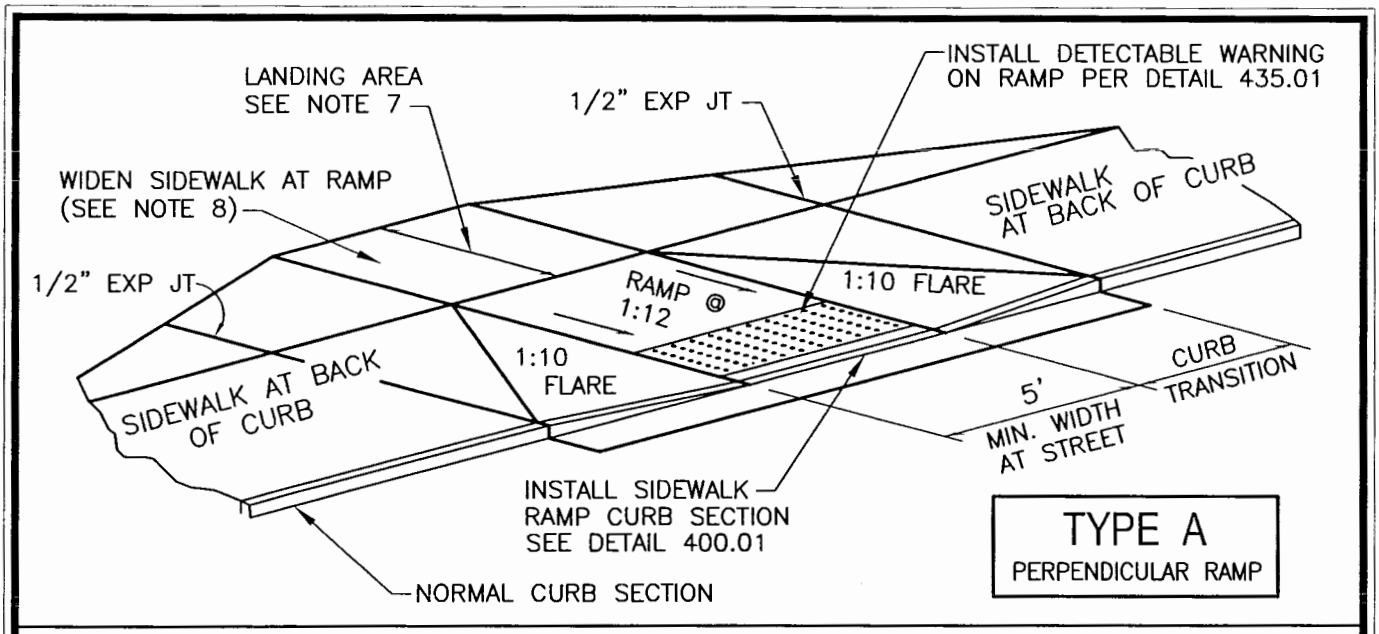

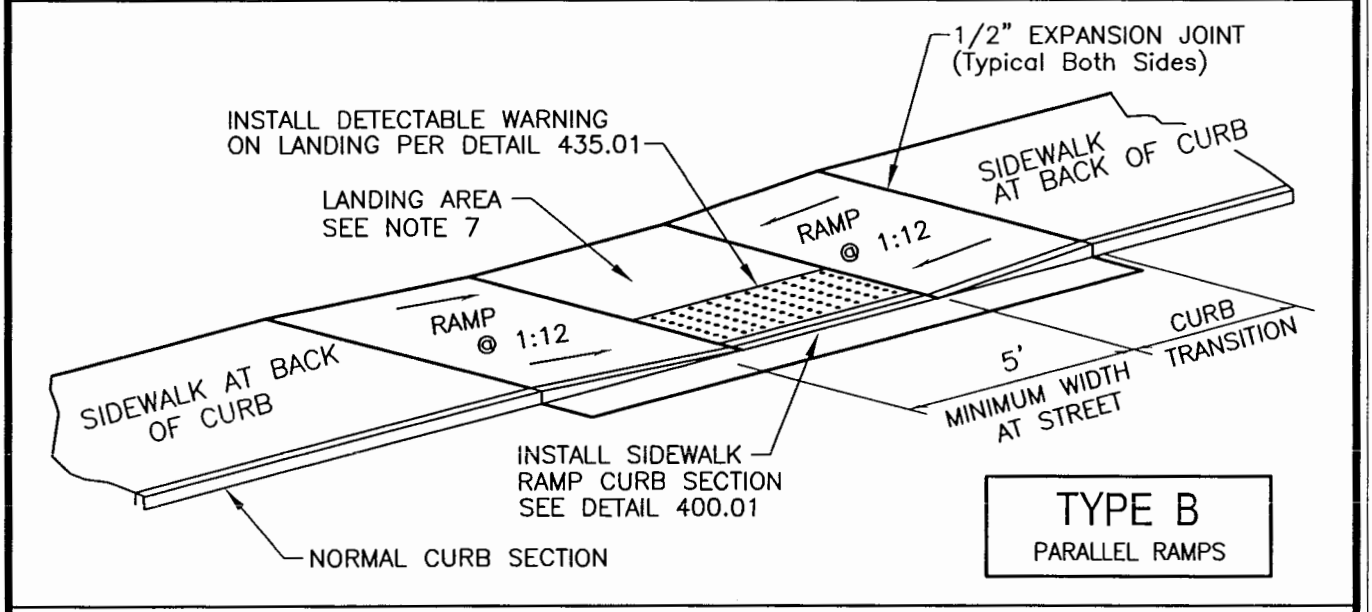

NOTE:

1. RAMP SHALL BE 4" THICK REINFORCED MoDOT PAVEMENT CONCRETE SAME AS SIDEWALK.
2. EXPANSION JOINT SHALL BE 1/2" PREFORMED CORK OR BITUMINOUS EXPANSION JOINT MATERIAL.
3. MAXIMUM RAMP CROSS SLOPE IS 2.00%.
4. ALL SLOPES ARE MEASURED FROM THE HORIZONTAL.
5. REPLACE STANDARD CURB SECTION WITH SIDEWALK RAMP CURB SECTION – DETAIL 400.01
6. RAMP LENGTH IS DEPENDENT ON 1:12 MAX. SLOPE. USE FLATTER WHEN POSSIBLE.
7. LANDING AREA SHALL BE 4'–0" MIN. WIDTH. SLOPE OF LANDING SHALL BE 1/8" PER FT. MIN./2.00% MAX. (ANY DIRECTION)
8. TYPE "A" RAMP NOT APPLICABLE WHEN NORMAL SIDEWALK WIDTH DOES NOT PROVIDE 4'–0" LANDING AT THE TOP OF RAMP, WIDEN SIDEWALK OR USE TYPE "B" RAMP.
9. 1:10 FLARES ARE REQUIRED ON TYPE "A" RAMPS.

Approved 10/01/16 Date Revisions	City of Columbia Public Works Department	MIDBLOCK SIDEWALK RAMP Sidewalk at Back of Curb	433.01

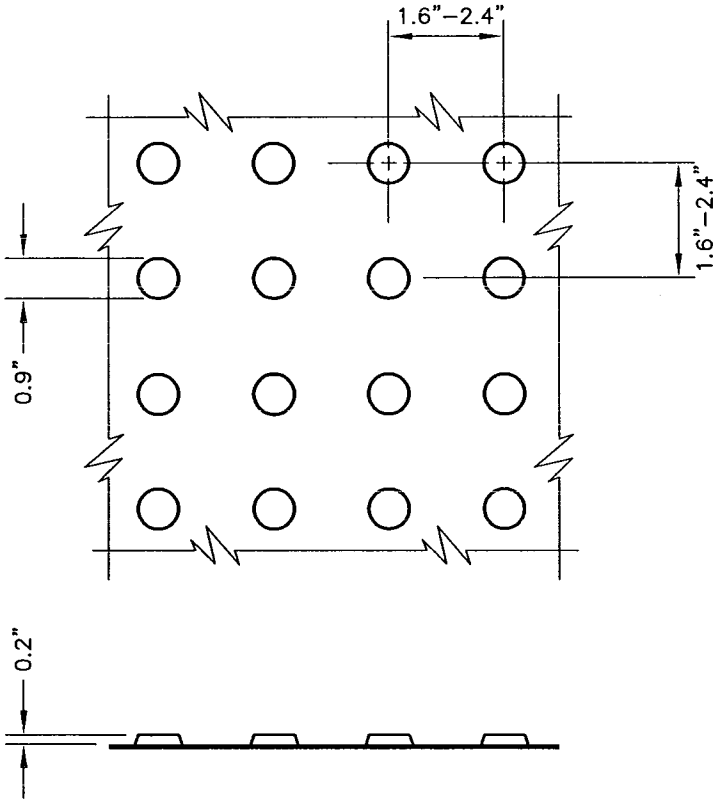

NOTE:

1. DETECTABLE WARNING SHALL CONSIST OF RAISED TRUNCATED DOMES WITH A DIAMETER OF 0.9", A HEIGHT OF NOMINAL 0.2", AND A CENTER–TO–CENTER SPACING OF NOMINAL 2.35", AND SHALL CONTRAST VISUALLY WITH ADJOINING SURFACES, ACHIEVED BY THE INSTALLATION OF ADA SOLUTIONS 2436 REPBR, 2448 REPBR, OR 2460 REPBR (OR APPROVED EQUAL) AND SHALL BE AN INTEGRAL PART OF THE WALKING SURFACE.
2. ADA SOLUTIONS 24RADREPBR OR APPROVED EQUAL TO BE USED WITH DETAIL 430.02, 432.02, AND 1000.08.
3. STAMPED CONCRETE IS NOT AN APPROVED EQUAL.
4. DOWNTOWN DETECTABLE WARNINGS MAY BE ADA 2004 COMPLIANT DETECTABLE WARNING PAVERS.
5. DETECTABLE WARNING PLATES ARE TO BE COLONIAL OR BRICK RED IN COLOR OR APPROVED EQUAL.
6. DETECTABLE WARNING SURFACES SHALL BE 24" WIDE AND EXTEND THE FULL LENGTH OF THE PUBLIC USE AREA.

Approved 10/01/16 Date	City of Columbia Public Works Department	DETECTABLE WARNING	435.01
Revisions			

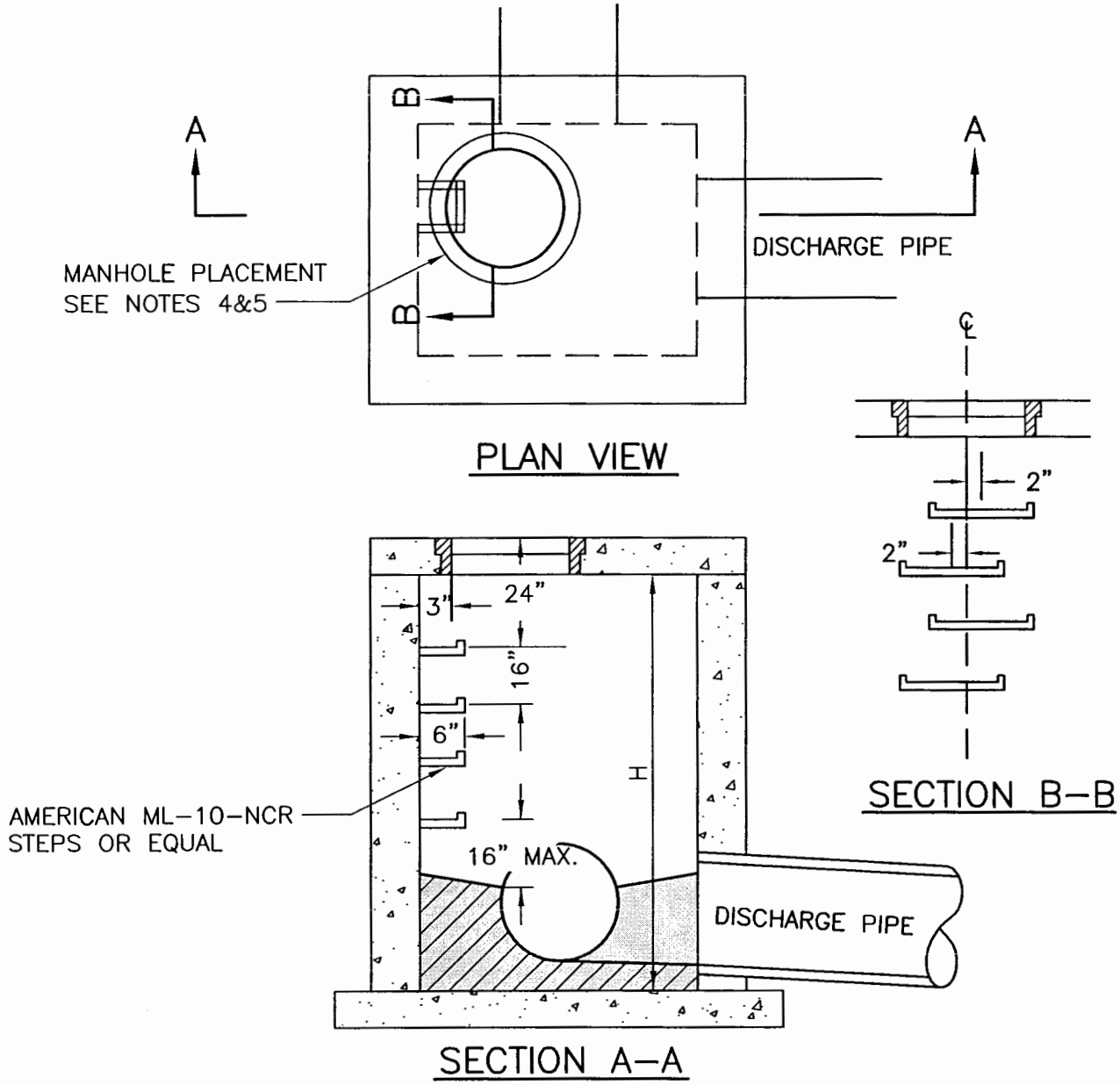

NOTES:

1. STEPS NOT REQUIRED WHERE H IS LESS THAN 4'.
2. STEPS SHALL BE ML–10–NCR OR EQUAL
3. STEPS SHALL BE PLACED ON VACANT WALL WHEN POSSIBLE
4. MANHOLE RING SHALL BE OFFSET TOWARD WALL WITH STEPS.
5. MANHOLE RING SHALL BE CENTERED ON CENTERLINE OF STEPS
6. STAGGER STEPS 2" EACH WAY FROM CENTERLINE OF MANHOLE RING.
7. TOP STEP 24" BELOW TOP OF SLAB
8. STEP SPACING TO BE 16", BOTTOM STEP TO BE NO HIGHER THAN 16" FROM INVERT.

Approved 10/01/16 Date Revisions	City of Columbia Public Works Department	DRAINAGE STRUCTURE STEPS	500.01

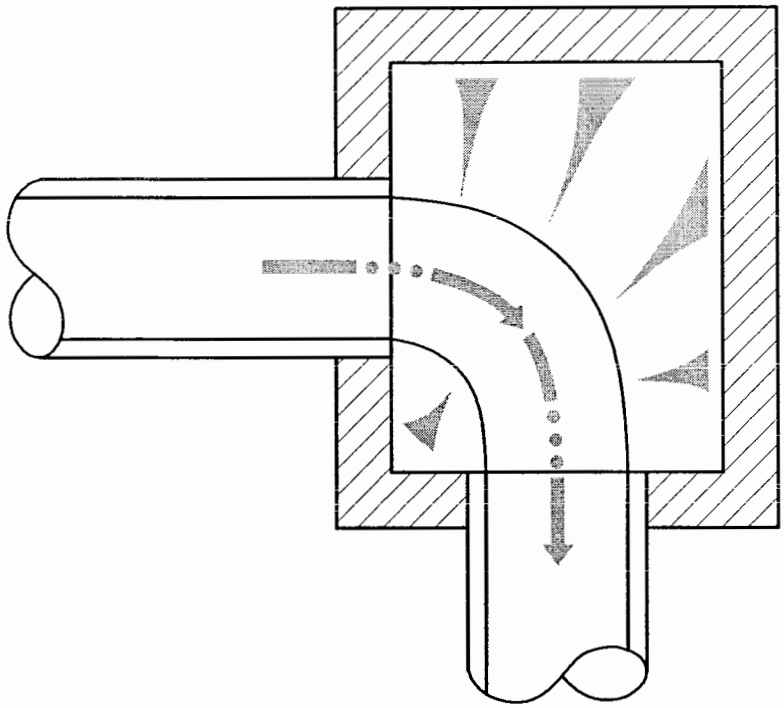

PLAN

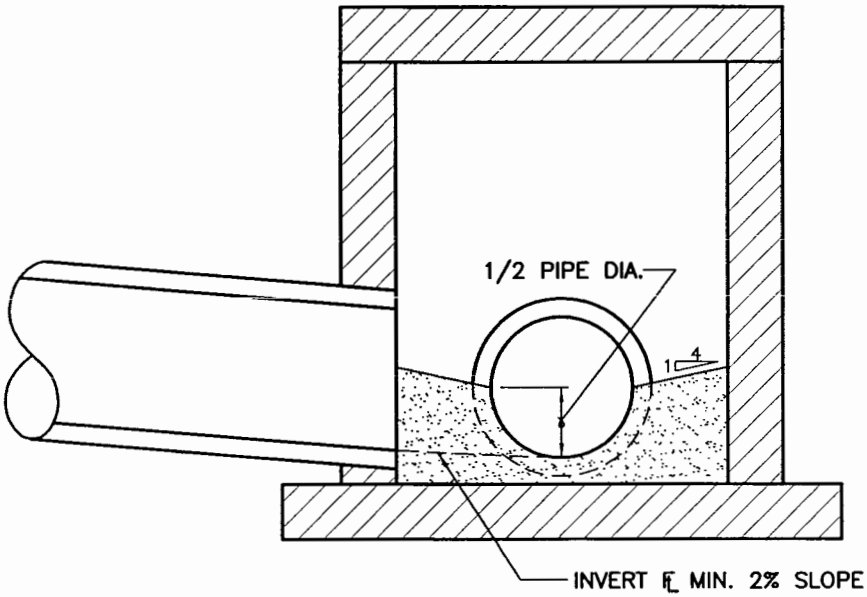

SECTION

NOTES:

1. FORM ALL INVERTS FOR SMOOTH FLOW THRU STRUCTURE.
2. INVERT SHALL BE FORMED UP TO 1/2 THE PIPE DIAMETER.
3. INVERT SHALL BE CLASS E CONCRETE.

Approved 10/01/16 Date	City of Columbia Public Works Department	DRAINAGE STRUCTURE INVERT	500.02
Revisions			

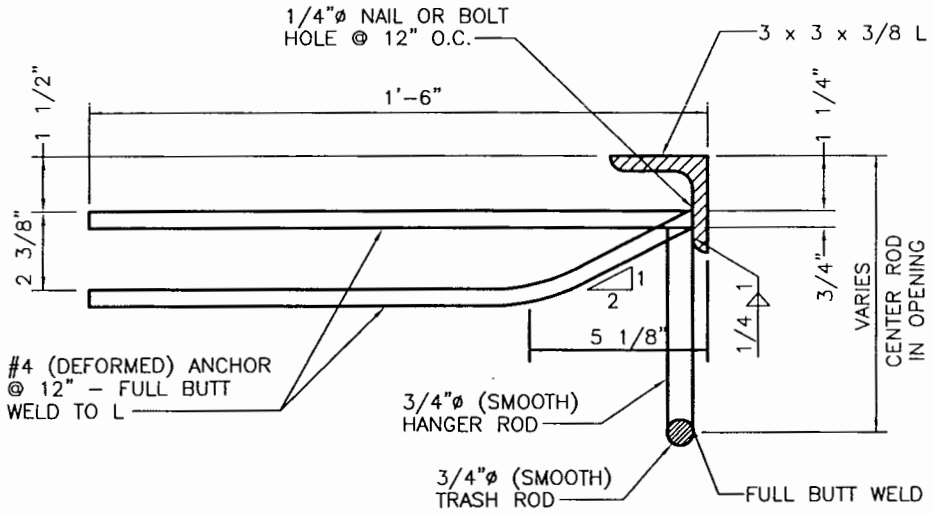

SECTION

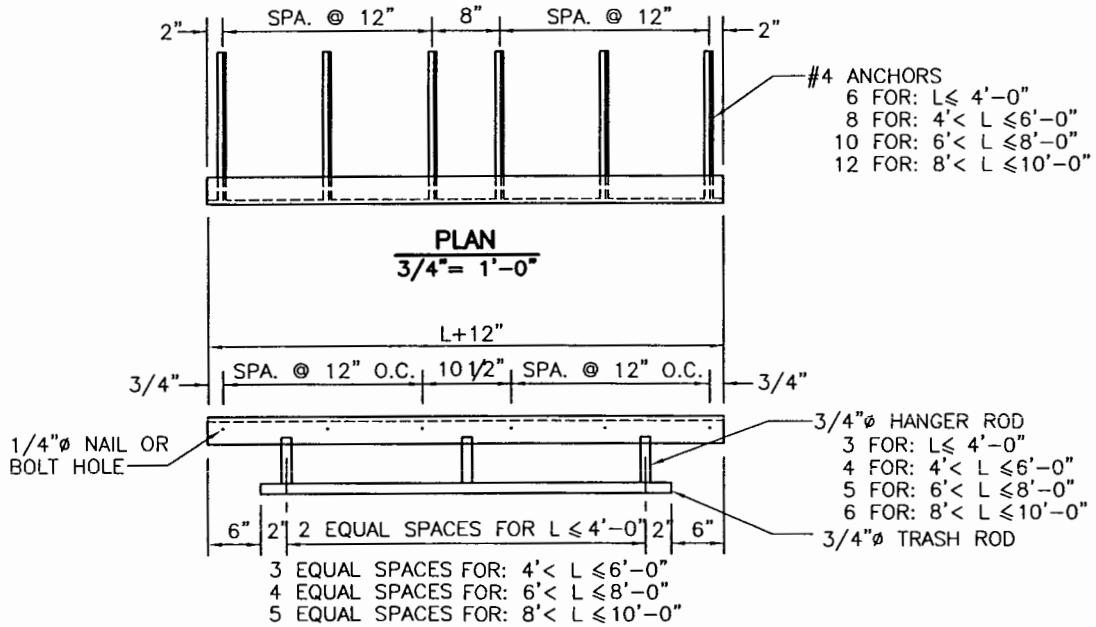

FRONT ELEV.

NOTES:

1. STRUCTURAL STEEL SHALL BE GRADE A-36
2. EXPOSED STEEL SURFACES TO BE FINISHED SMOOTH.
3. HOT DIP GALVANIZE ASSEMBLY. CHIPPING NOT REQUIRED ON ANCHOR WELDS.
4. NAILS OR BOLTS USED TO ANCHOR ANGLE ASSEMBLY TO FORM SHALL BE REMOVED OR CUT OFF FLUSH WITH SURFACE OF ANGLE. DO NOT MAR GALVANIZING.
5. DIMENSION "L" REPRESENTS THE INSIDE INLET DIMENSION.

Approved 10/01/16 Date	City of Columbia Public Works Department	INLET OPENING TRASH RACK	500.03
Revisions			

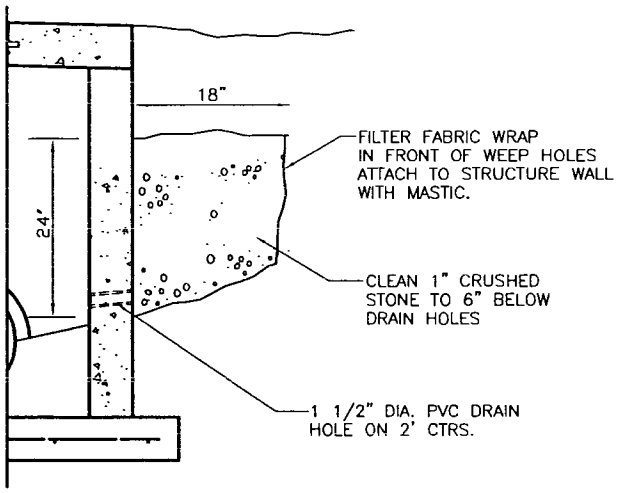

PARTIAL SECTION

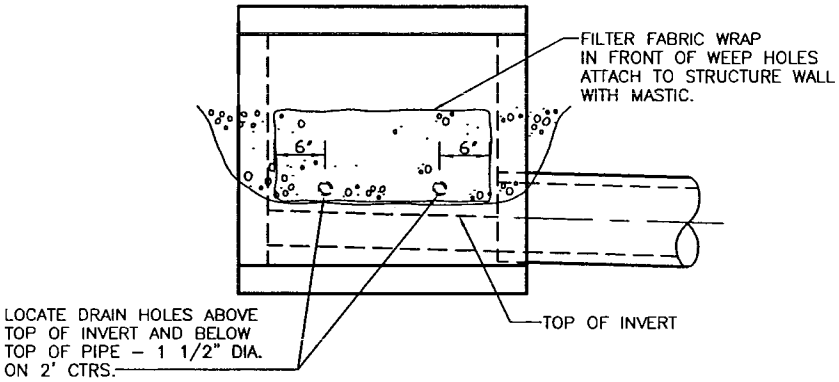

FRONT ELEVATION

NOTE:

1. PLACE WEEP HOLES ON UPSTREAM FACE OF ALL STRUCTURES AND ALSO ON ROADWAY FACE OF CURB INLET STRUCTURES.
2. WEEP HOLE FILTER FABRIC SHALL CONSIST OF A NON–WOVEN, POLYPROPYLENE TYPE FABRIC SUCH AS: AMOCO 4553 NON–WOVEN GEOTEXTILE FABRIC OR APPROVED EQUAL.

Approved 10/01/16 Date Revisions	City of Columbia Public Works Department	DRAINAGE STRUCTURE WEEP HOLES	500.04

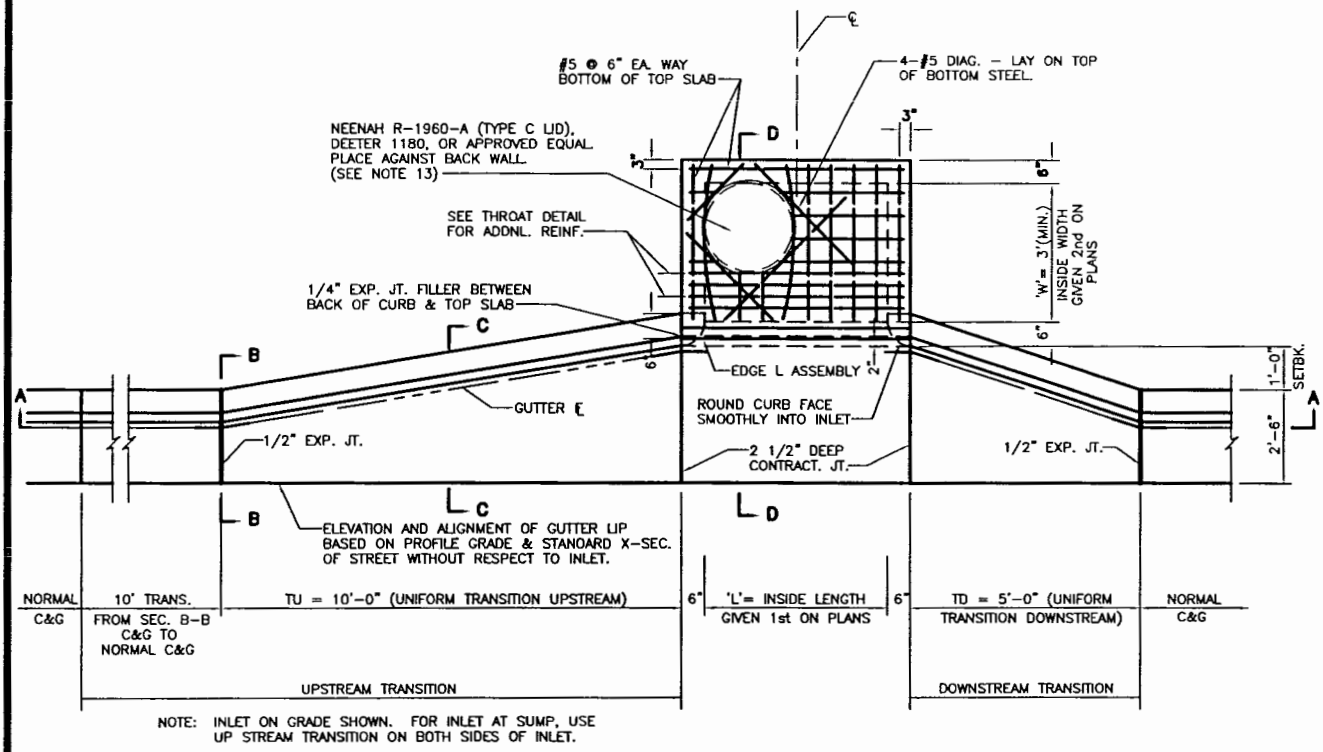

NOTE: INLET ON GRADE SHOWN. FOR INLET AT SUMP, USE UP STREAM TRANSITION ON BOTH SIDES OF INLET.

PLAN

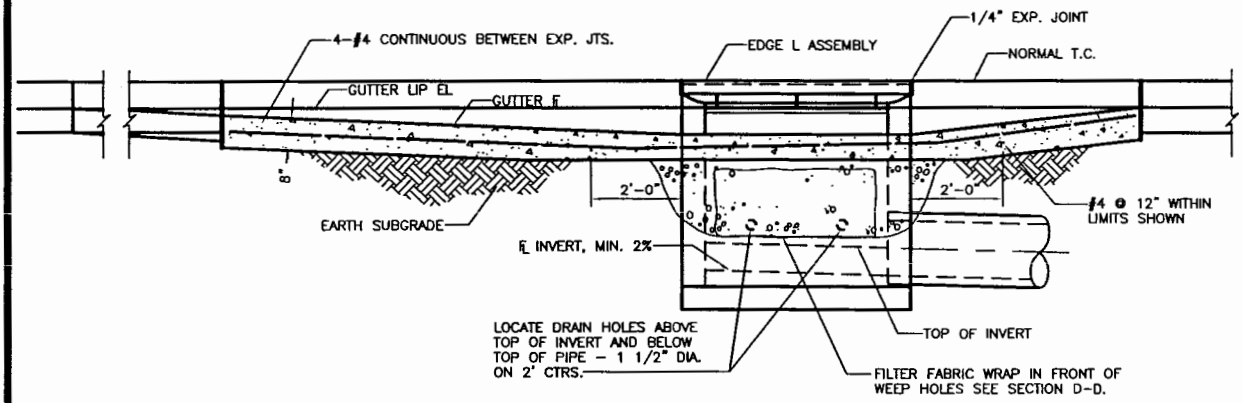

SECTION A-A

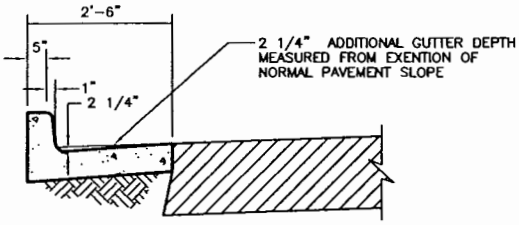

SECTION B-B

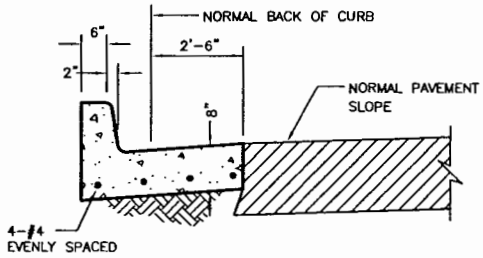

SECTION C-C

Approved	10/01/16 Date	City of Columbia Public Works Department	TYPE M INLET (Plan & Sections)	505.01A
Revisions				

TYPE M INLET NOTES

1. CONCRETE SHALL BE: CLASS E FOR BASE, CLASS D FOR WALLS AND TOP.
2. REINFORCING STEEL SHALL BE GRADE 60
3. THIS DESIGN IS FOR L = 4'-0", 6'-0", 8'-0", OR 10'-0".
4. INLET WILL BE CALLED OUT ON PLANS AS 'L'x'W' STD. CURB INLET, OR 'L'x'W' DEFLECTOR CURB INLET. DIMENSIONS 'L'&'W' GIVEN ON PLANS AS 'L'x'W'.
5. STA AND OFFSET OR COORDINATES SHOWN ON PLAN ARE GIVEN TO CENTER OF INLET WALLS.
6. THE ELEVATION OF THE TOP OF INLET GIVEN ON THE PLAN SHEET IS AT THE CENTER OF THE FRONT EDGE OF THE EDGE ANGLE ASSEMBLY. SLOPE THE TOP TO MATCH STREET GRADE, AND CROSS SLOPE OF RIGHT OF WAY.
7. DIMENSIONS TU AND TD AS SHOWN EXCEPT WHERE NOTED OTHERWISE IN PLANS.
8. TRANSITIONS ALONG LENGTH TU & TD MUST BE UNIFORM BETWEEN STANDARD CURB & GUTTER CROSS SECTION & THAT SHOWN AT INLET. FORM CURB FACE WITH FLEXIBLE FORM.
9. REINFORCEMENT:
   (A) BEND AROUND MH RING WHEREVER FEASIBLE. (SEE PLAN)
   (B) MINIMUM 2" COVER REQUIRED UNLESS NOTED OTHERWISE.
10. BROOM FINISH TOP SLAB.
11. HORIZONTAL PROJECTION OF PIPE CENTERLINE SHALL INTERSECT AT THE CENTER OF INLET, UNLESS OTHERWISE SHOWN.
12. TRIM PIPE FLUSH WITH INSIDE WALLS.
13. STEPS, FRAME, AND LID:
    STEPS NOT REQUIRED WHERE H IS LESS THAN 4'.
    STEPS SHALL BE ML-10-NCR OR EQUAL
    STEPS SHALL BE PLACED ON VACANT WALL WHEN POSSIBLE
    MANHOLE RING SHALL BE OFFSET TOWARD WALL WITH STEPS.
    MANHOLE RING SHALL BE CENTERED ON CENTERLINE OF STEPS
    STAGGER STEPS 2" EACH WAY FROM CENTERLINE OF MANHOLE RING.
    TOP STEP 24" BELOW TOP OF SLAB
    STEP SPACING TO BE 16", BOTTOM STEP TO BE NO HIGHER THAN 16" FROM INVERT.
14. CLASS E CONCRETE INVERT SHALL BE FORMED UP TO 1/2 THE PIPE DIAMETER.
15. WEEP HOLE FILTER FABRIC SHALL CONSIST OF A NON-WOVEN, POLYPROPYLENE TYPE FABRIC SUCH AS PROPEX GEOTEX 801 NON-WOVEN GEOTEXTILE FABRIC OR APPROVED EQUAL.
16. DRIVEWAYS ARE TO BE AT LEAST 5' FROM END OF CURB TRANSITION (TU AND TD).

Approved 10/01/16 Date Revisions	City of Columbia Public Works Department	TYPE M INLET NOTES	505.01B

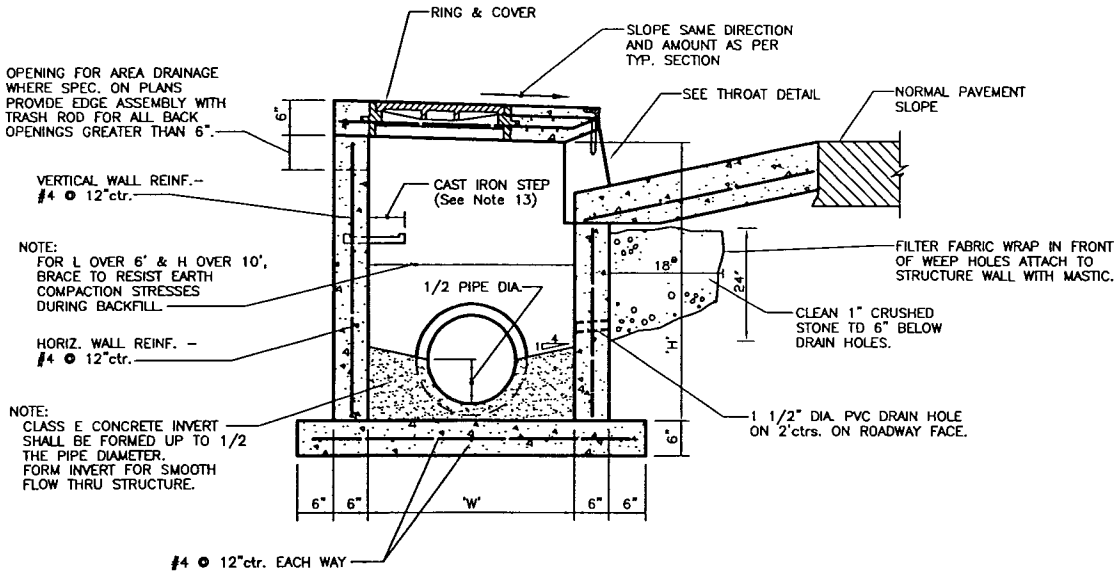

SECTION D–D

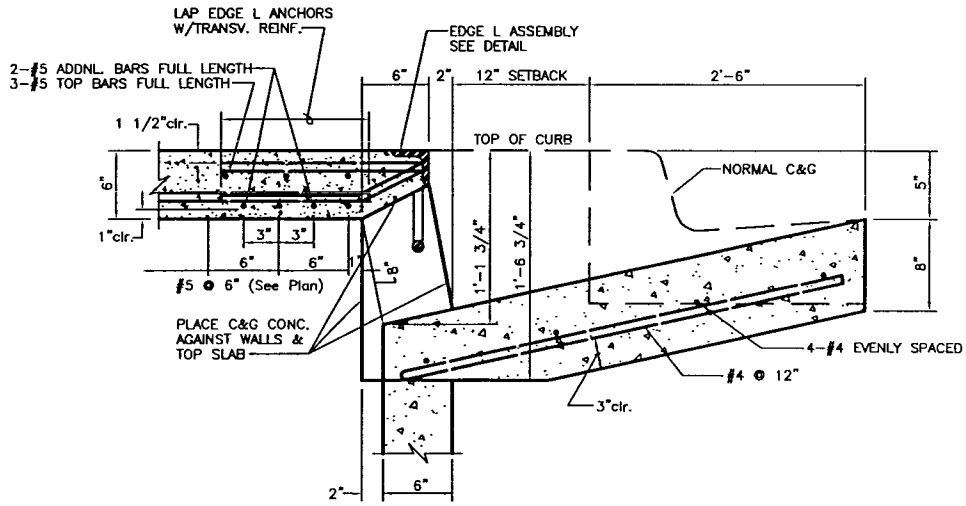

THROAT DETAIL

Approved 10/01/16 Date	City of Columbia Public Works Department	TYPE M INLET SECTION AND DETAIL	505.01C
Revisions			

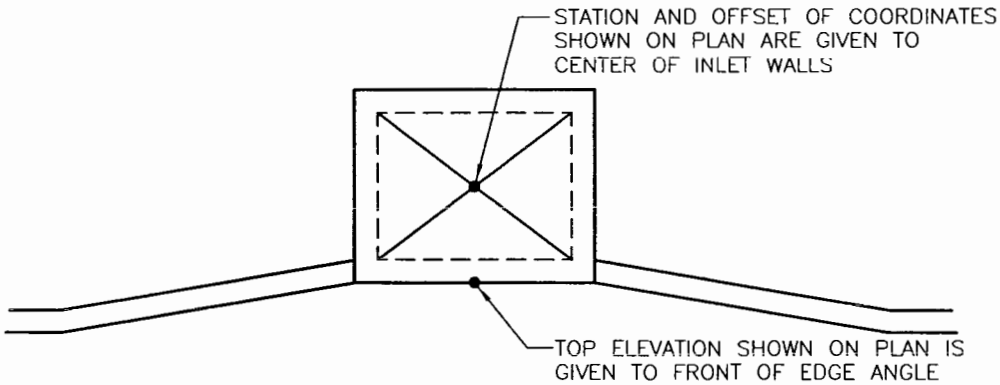

INLET PLAN INFORMATION

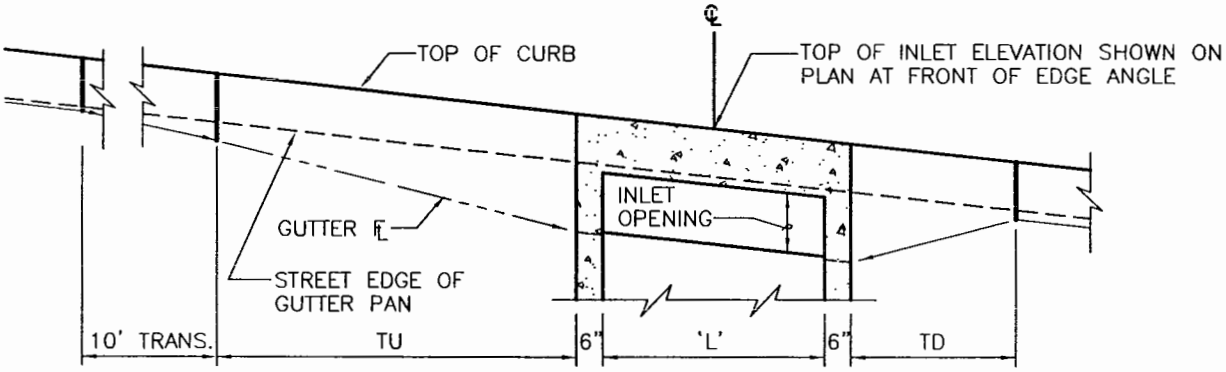

ON SLOPE

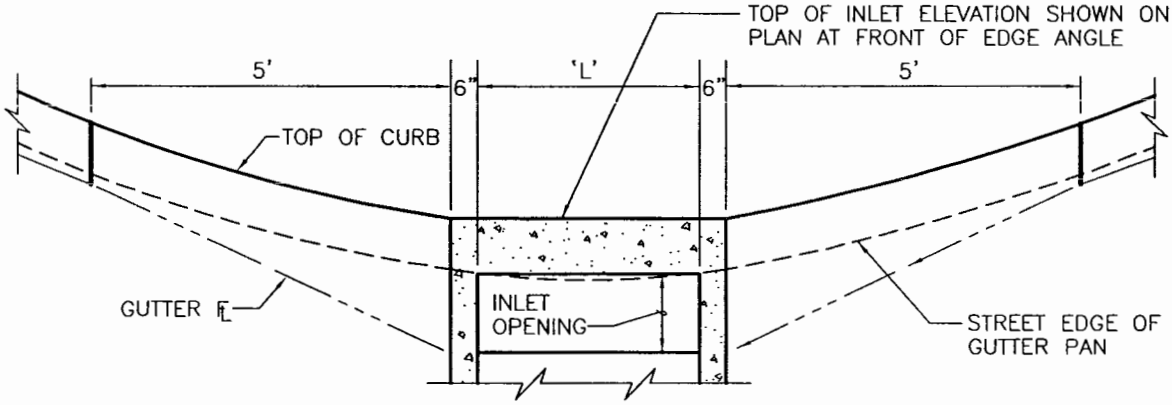

AT LOW POINT

INLET SETTING DIAGRAMS

Approved 10/01/16 Date Revisions	City of Columbia Public Works Department	TYPE M INLET SETTING DIAGRAM	505.01D

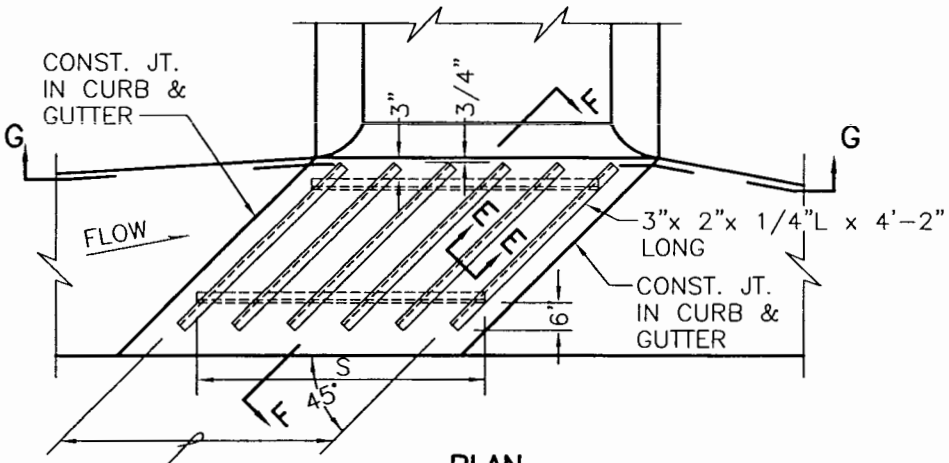

PLAN

DEFLECTORS TO BE EQUALLY SPACED

- FOR L=4'; 6 DEFLECTORS–S=4'–6"
- FOR L=6'; 8 DEFLECTORS–S=6'–6"
- FOR L=8'; 11 DEFLECTORS–S=8'–6"
- FOR L=10'; 13 DEFLECTORS–S=10'–6"

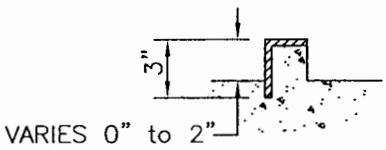

SECTION E–E

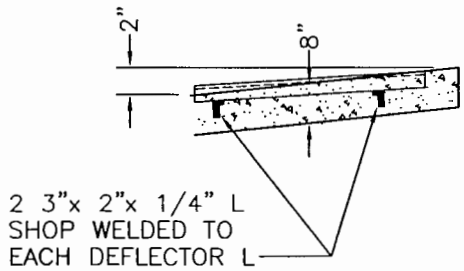

SECTION F–F

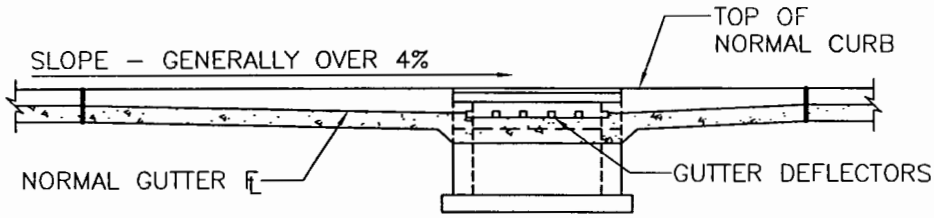

SECTION G–G

GUTTER DEFLECTOR NOTES:

1. ASSEMBLY TO BE HOT DIP GALVANIZED.
2. TO BE USED WHERE DEFLECTOR CURB INLET IS SPECIFIED
3. BEFORE PLACING CONCRETE; SUPPORT UNIT SECURELY IN FINAL POSITION BY ATTACHING TO METAL RODS DRIVEN INTO SUBGRADE

Approved 10/01/16 Date	City of Columbia Public Works Department	TYPE M INLET DEFLECTOR DETAIL	505.01E
Revisions			

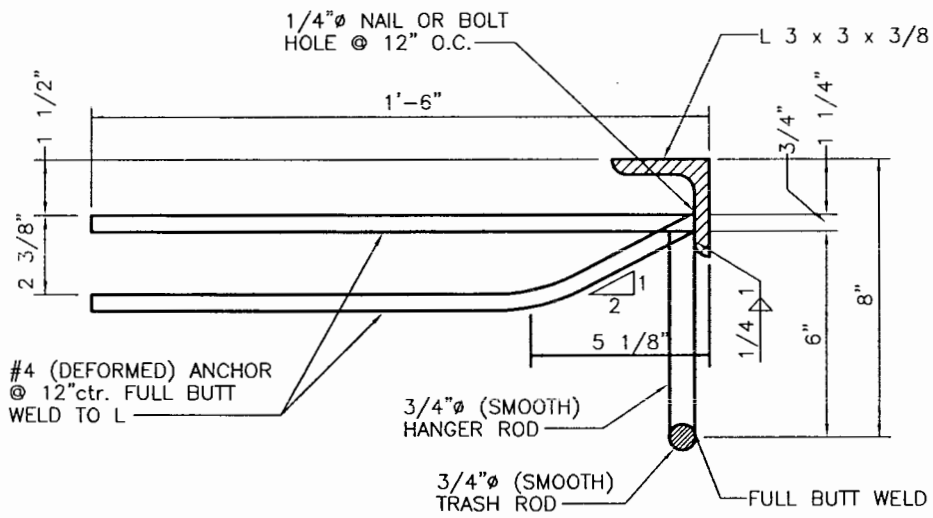

SECTION

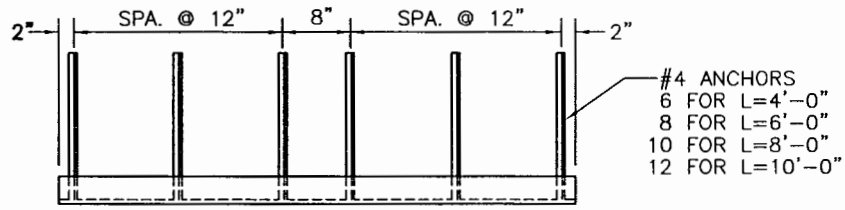

PLAN
3/4"= 1'-0"

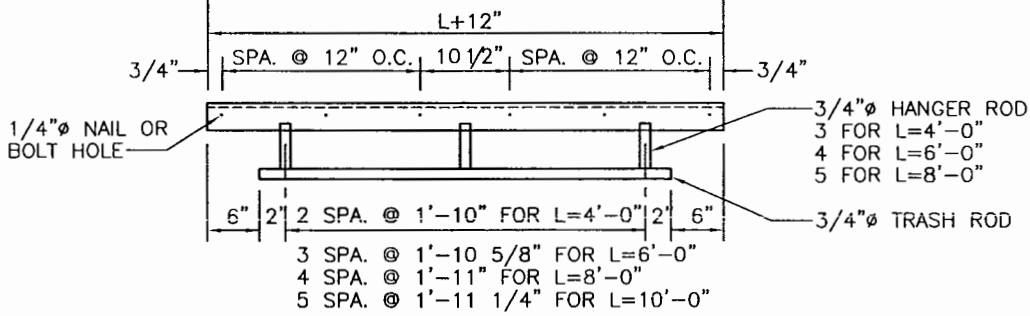

FRONT ELEV.

NOTES:

1. STRUCTURAL STEEL SHALL BE GRADE A-36
2. EXPOSED STEEL SURFACES TO BE FINISHED SMOOTH.
3. HOT DIP GALVANIZE ASSEMBLY, EXCEPT THAT GALV. NOT REQUIRED ON DEFORMED ANCHORS. CHIPPING NOT REQUIRED ON ANCHOR WELDS.
4. NAILS OR BOLTS USED TO ANCHOR ANGLE ASSEMBLY TO FORM SHALL BE REMOVED OR CUT OFF FLUSH WITH SURFACE OF ANGLE.
5. DIMENSION "L" REPRESENTS THE INSIDE INLET DIMENSION.

Approved 10/01/16 Date	City of Columbia Public Works Department	TYPE M INLET EDGE ANGLE ASSEMBLY	505.01F
Revisions			

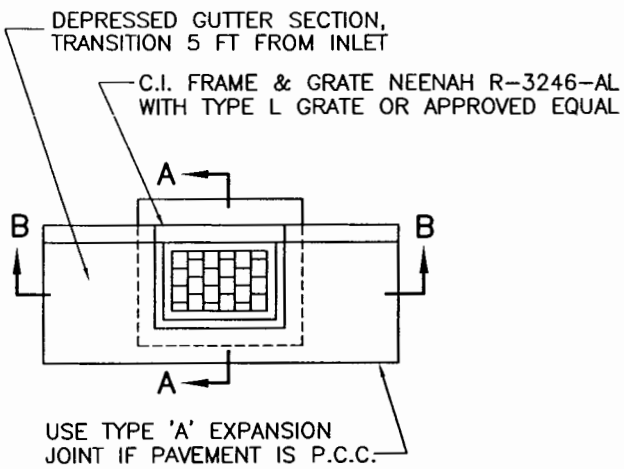

PLAN – SINGLE

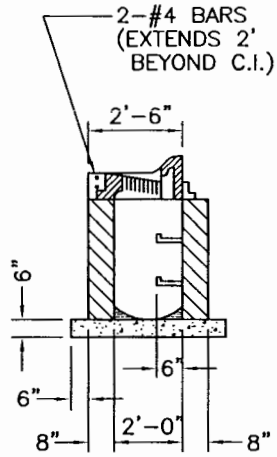

SECTION A–A
ALTERNATE

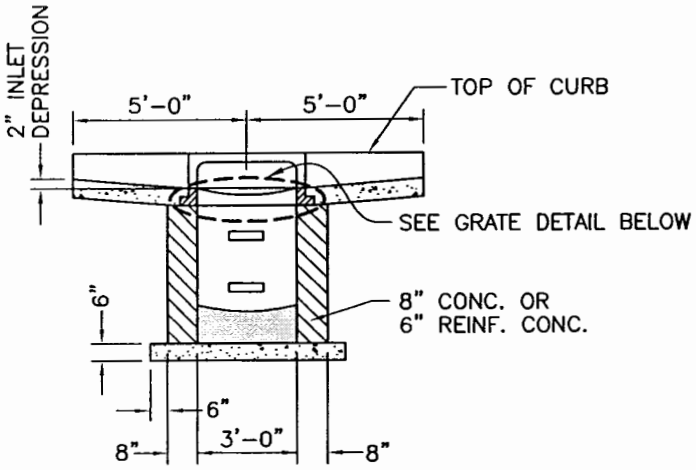

SECTION B–B

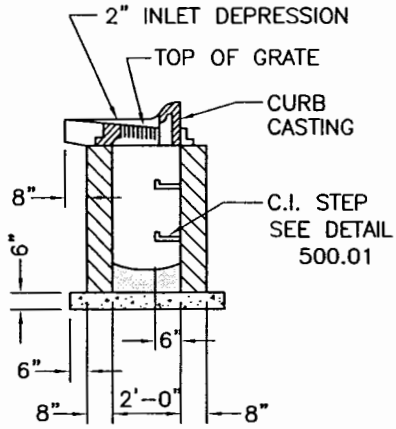

SECTION A–A

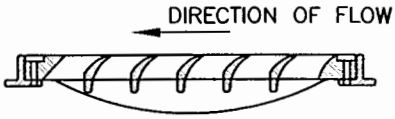

GRATE DETAIL

NOTES:
1. CONCRETE SHALL BE CLASS E FOR BASES AND D FOR WALLS AND TOP.
2. REINFORCING STEEL SHALL BE GRADE 60
3. INSTALL WEEP HOLES AS PER DETAIL 500.04
4. STRUCTURES WHERE H>8' SHALL BE REINFORCED CONCRETE (#4 BARS AT 12" CTRS, BOTH WAYS AND #4 BARS DIAGONAL AT PIPE OPENINGS)

Approved 10/01/16 Date	City of Columbia Public Works Department	SINGLE TYPE "A" INLET	505.02A
Revisions			

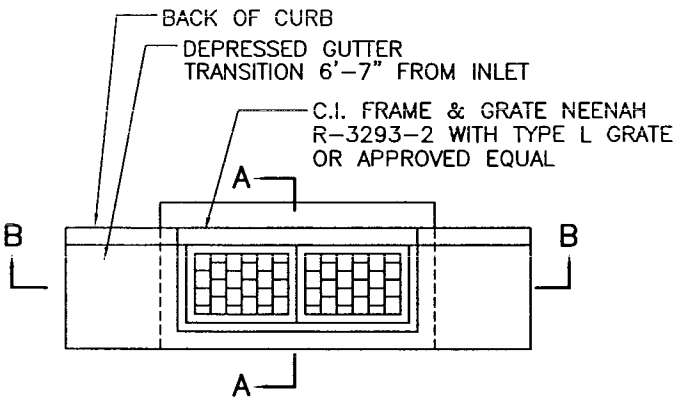

PLAN – DOUBLE

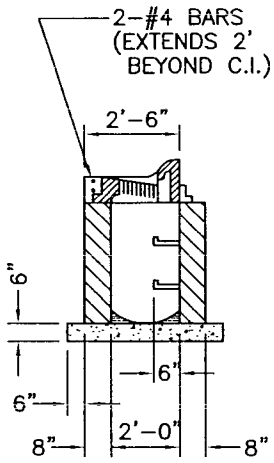

SECTION A–A

ALTERNATE

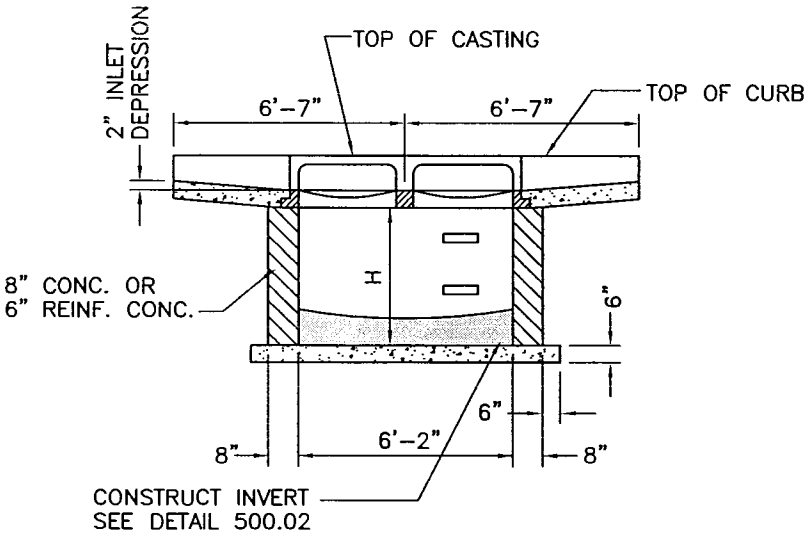

SECTION B–B

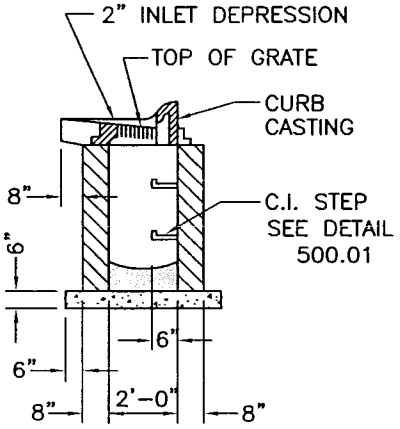

SECTION A–A

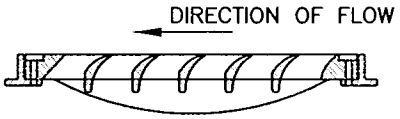

GRATE DETAIL

NOTES:

1. CONCRETE SHALL BE CLASS E FOR BASES AND D FOR WALLS AND TOP.
2. REINFORCING STEEL SHALL BE GRADE 60
3. INSTALL WEEP HOLES AS PER DETAIL 500.04
4. STRUCTURES WHERE H>8' SHALL BE REINFORCED CONCRETE (#4 BARS AT 12" CTRS, BOTH WAYS AND #4 BARS DIAGONAL AT PIPE OPENINGS)

Approved 10/01/16 Date	City of Columbia Public Works Department	DOUBLE TYPE "A" INLET	505.02B
Revisions			

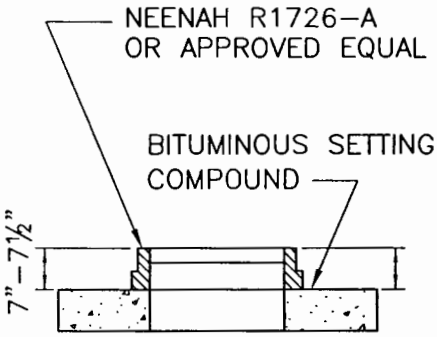

ALTERNATE TOP
(MUST BE USED UNDER PAVEMENTS ONLY)

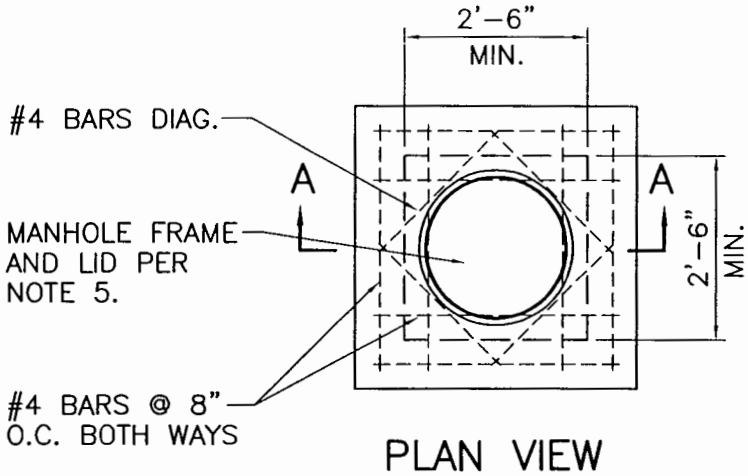

PLAN VIEW

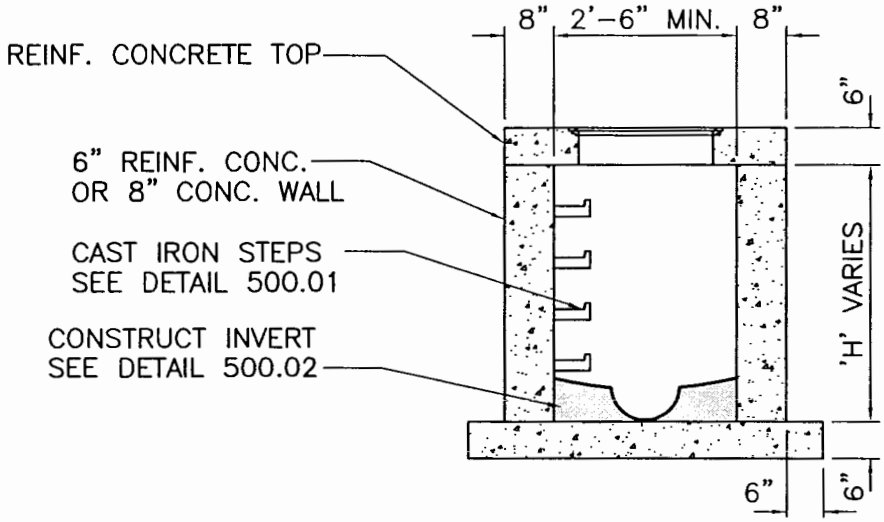

SECTION A-A
(Showing Standard Flush Top)

NOTES:

1. CONCRETE SHALL BE CLASS E FOR BASES AND D FOR WALLS AND TOP.
2. REINFORCING STEEL SHALL BE GRADE 60
3. INSTALL WEEP HOLES AS PER DETAIL 500.04
4. STRUCTURES WHERE H>8' SHALL BE REINFORCED CONCRETE (#4 BARS AT 12" CTRS, BOTH WAYS AND #4 BARS DIAGONAL AT PIPE OPENINGS)
5. FRAME AND LID SHALL BE NEENAH R-1960-A (TYPE C LID) OR APPROVED EQUAL. SEE DETAIL 500.01 FOR PLACEMENT.

Approved 10/01/16 Date	City of Columbia Public Works Department	JUNCTION BOX	510.01
Revisions			

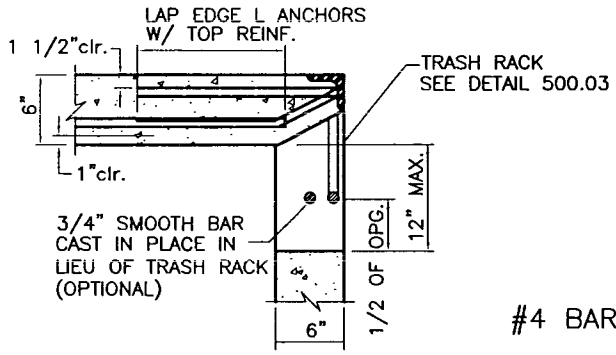

OPENINGS OVER 6"

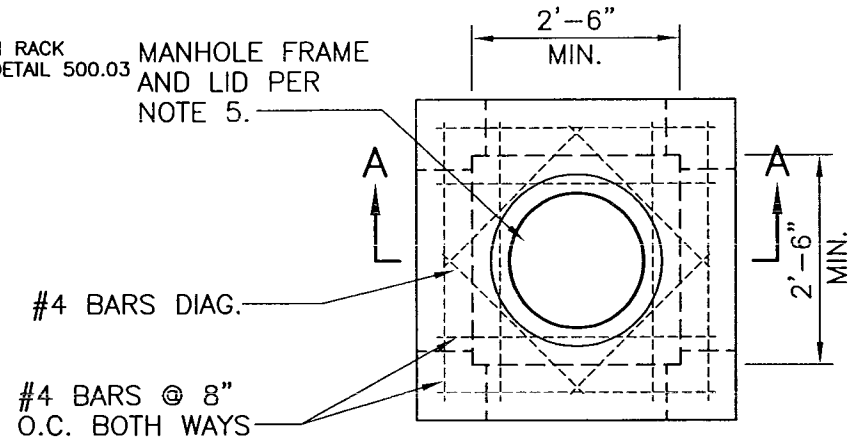

PLAN VIEW

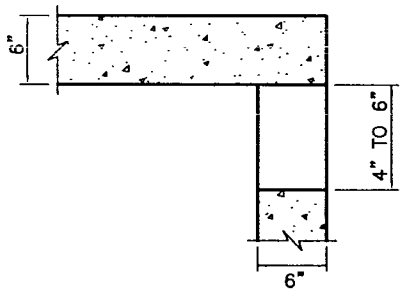

OPENINGS 4" TO 6"

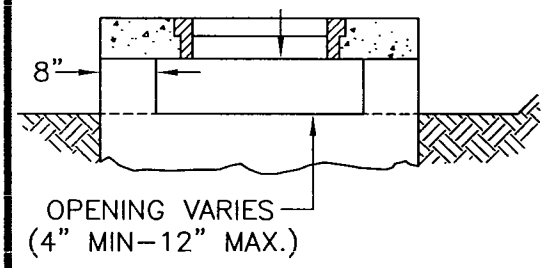

SIDE OPENING DETAIL

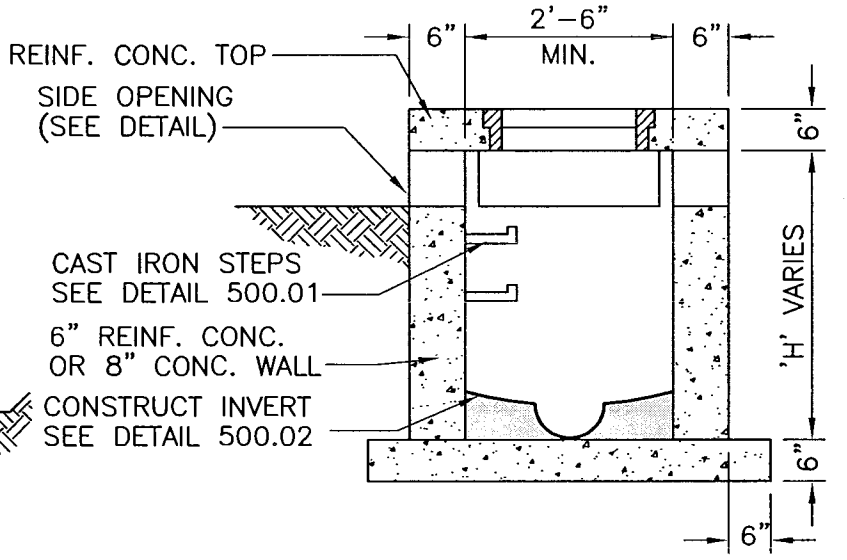

SECTION A-A

NOTES:

1. CONCRETE SHALL BE CLASS E FOR BASES AND D FOR WALLS AND TOP.
2. REINFORCING STEEL SHALL BE GRADE 60
3. INSTALL WEEP HOLES AS PER DETAIL 500.04
4. STRUCTURES WHERE H>8' SHALL BE REINFORCED CONCRETE (#4 BARS AT 12" CTRS, BOTH WAYS AND #4 BARS DIAGONAL AT PIPE OPENINGS)
5. FRAME AND LID SHALL BE NEENAH R-1960-A (TYPE C LID), DEETER 1180, OR APPROVED EQUAL. SEE DETAIL 500.01 FOR PLACEMENT.
6. SIDE OPENINGS TO BE ON ALL FOUR SIDES UNLESS NOTED OTHERWISE
7. INSTALL TRASH RACK ON OPENINGS OVER 6" SEE DETAIL 500.03

Approved 10/01/16 Date	City of Columbia Public Works Department	SIDE OPENING INLET	510.02
Revisions			

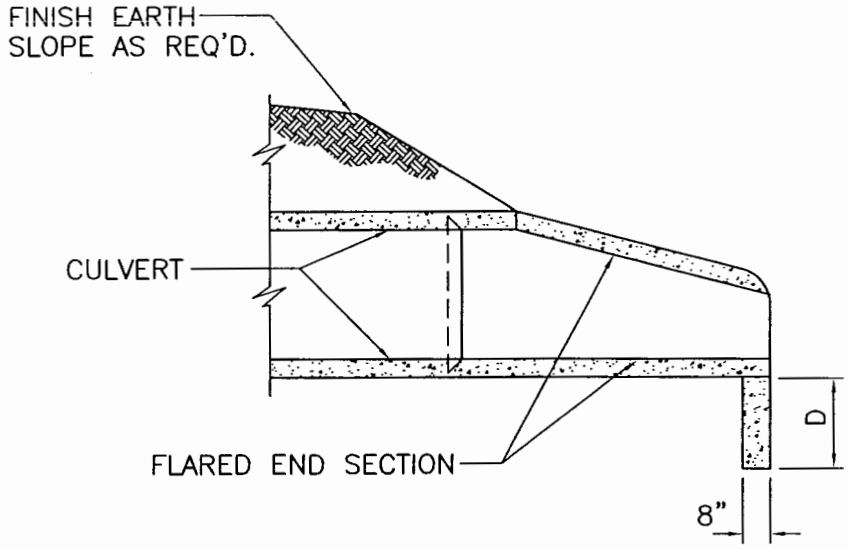

SECTION VIEW

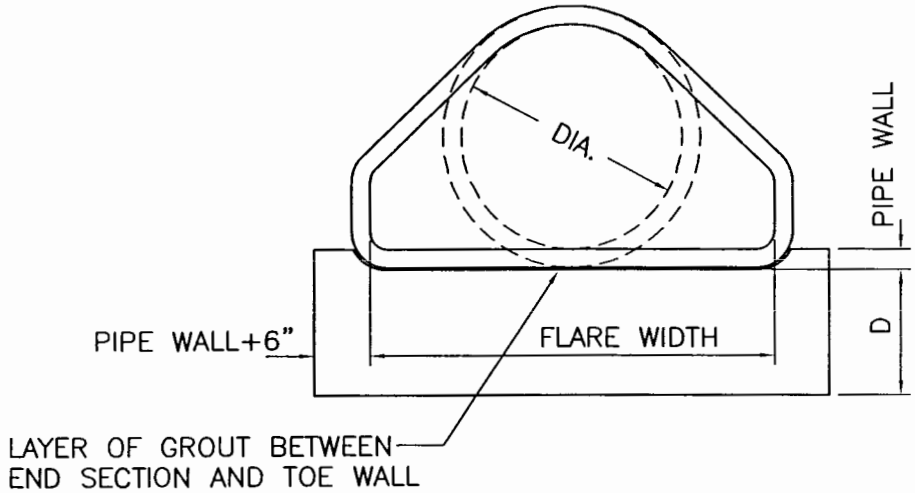

END VIEW

NOTE:

1. CONCRETE FOR TOE WALL SHALL BE CLASS E
2. D=18" FOR PIPES WITH INSIDE DIAMETER 21" OR LESS.
3. D=24" FOR PIPES WITH INSIDE DIAMETER FROM 24" TO 48".
4. D=36" FOR PIPES WITH INSIDE DIAMETER 54" OR MORE.

Approved 10/01/16 Date	City of Columbia Public Works Department	TOEWALL & END SECTION FOR RCP	525.01A
Revisions			

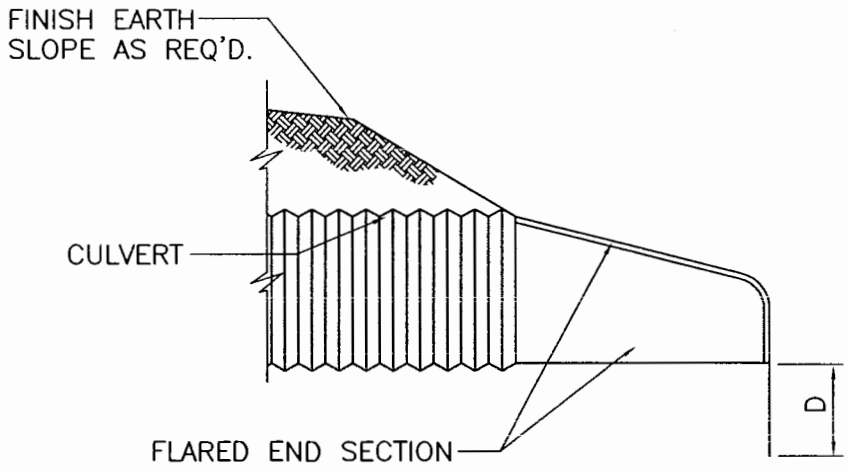

SECTION VIEW

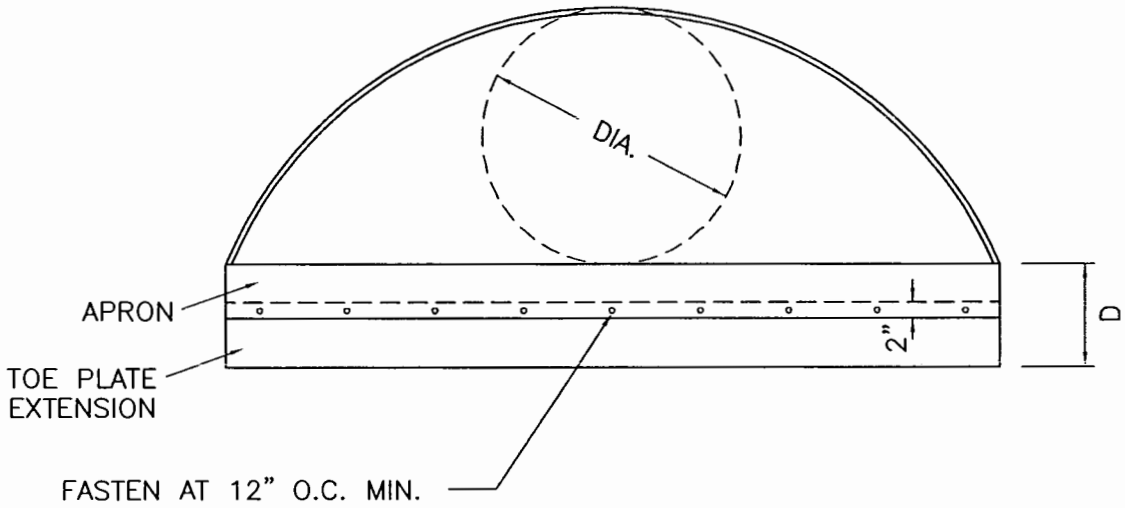

END VIEW

NOTE:

1. D=12" FOR PIPES WITH INSIDE DIAMETER 24" OR LESS.
2. D=18" FOR PIPES WITH INSIDE DIAMETER 27" OR MORE.
3. EXTENSION PLATE SHALL BE SAME MATERIAL AS PIPE. THICKNESS SHALL BE EQUAL TO EQUIVALENT DIAMETER CMP GAUGE.
4. APRON AND TOE PLATE SHALL BE SECURELY FASTENED WITH SPOT WELDS, BOLTS, OR RIVETS.

Approved	10/01/16 Date	City of Columbia Public Works Department	END SECTION FOR HDPE AND CMP	525.01B
Revisions				

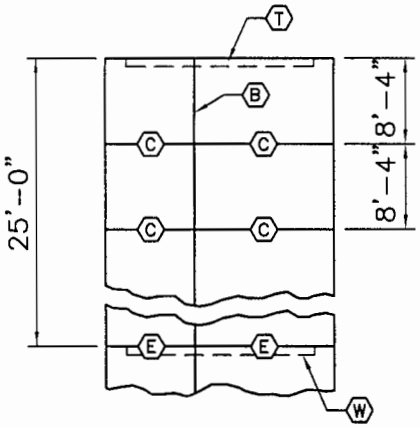

PLAN VIEW

LEGEND

- (C) SAW JOINT, FILL WITH BITUMASTIC JOINT SEALANT – SEE DETAIL.
- (E) 1/2" EXPANSION JOINT AT 50' INTERVALS.
- (T) TOE WALL TO BE CONSTRUCTED AT INLET & OUTLET END OF PAVED DITCHES.
- (B) KEY JOINT (SEE DETAIL)
- (W) CUT-OFF WALL @ 25'-0" SPA.

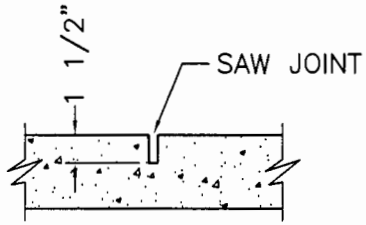

C JOINT DETAIL

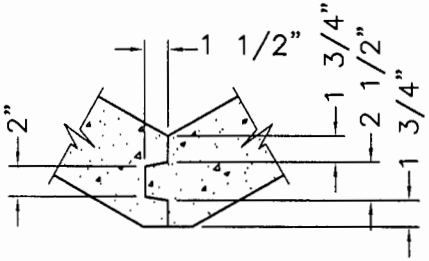

B JOINT DETAIL

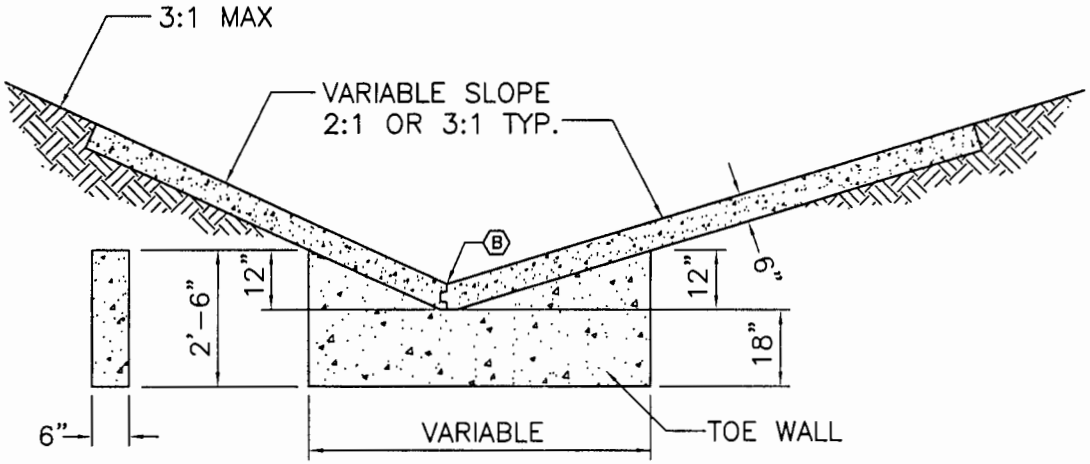

END SECTION

SECTION THROUGH SWALE

SHOWING TOE WALL OR CUT-OFF WALL

NOTE:
CONCRETE SHALL BE CLASS E

Approved
Revisions
10/01/16
Date

City of Columbia
Public Works Department

CONCRETE SWALE
(V-Type)

530.01

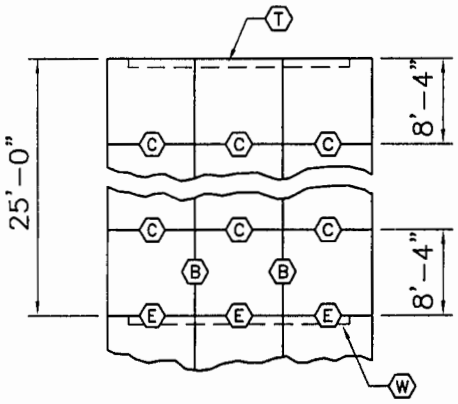

PLAN VIEW

LEGEND

- (C) SAW JOINT, FILL WITH BITUMASTIC JOINT SEALANT – SEE DETAIL.
- (E) 1/2" EXPANSION JOINT AT 50' INTERVALS
- (B) KEY JOINT (SEE DETAIL)
- (T) TOE WALL TO BE CONSTRUCTED AT INLET & OUTLET END OF PAVED DITCHES.
- (W) CUT-OFF WALL @ 25'-0" SPA.

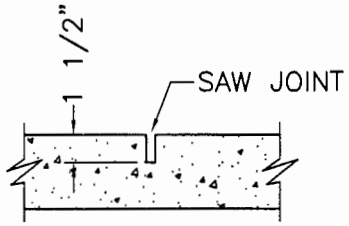

JOINT DETAIL

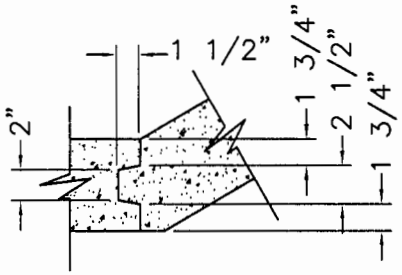

B JOINT DETAIL

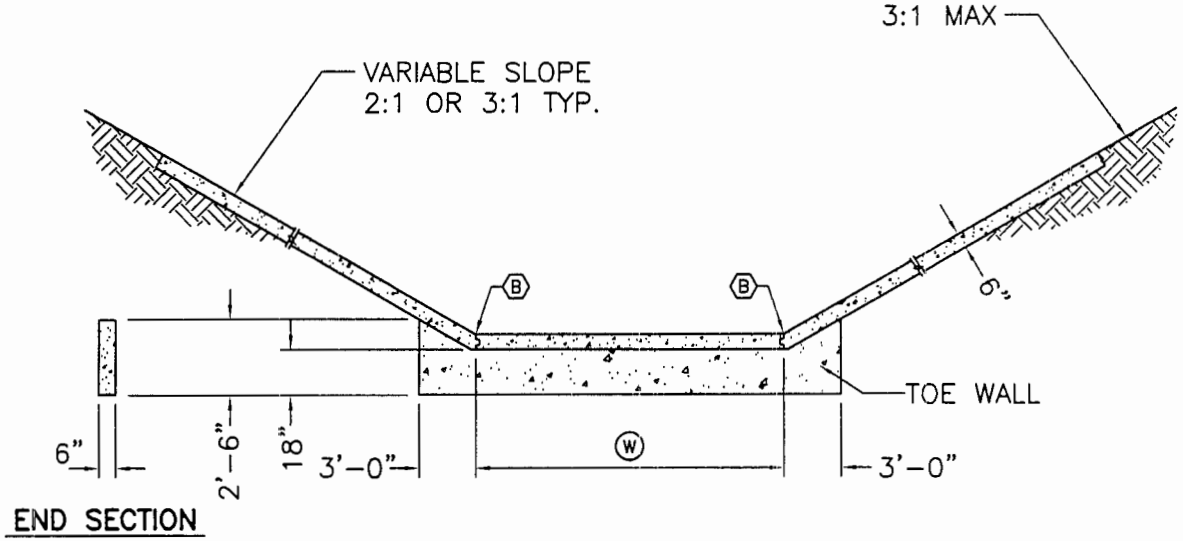

END SECTION

SECTION THROUGH SWALE

SHOWING TOE WALL OR CUT-OFF WALL

NOTE:
CONCRETE SHALL BE CLASS E

City of Columbia
Public Works Department

Approved
10/01/16
Date

Revisions

CONCRETE SWALE
(Flat-Bottom Type)

530.02

Pipe Size (in)	Maximum Pipe Slope (%)	Length L (ft)	Bottom Width BW Minimum (ft)	Top Width TW Minimum (ft)	Thickness T Minimum (ft)
12	3.50	12	4	8	2
15	2.60	15	4	9	2
18	2.00	16	4	10	2
24	1.70	20	4	12	2
30	1.40	24	6	16	2
36	1.00	28	6	18	2
42	0.80	32	6	20	3
48	0.65	36	6	22	3
54	0.55	40	8	26	3
60	0.45	44	8	28	3
72	0.40	48	8	32	3

RIP RAP TO BE TYPE 1: ROCK MUST BE ANGULAR, HARD AND DURABLE.

ROCK LINER FABRIC SHALL BE PROPEX GEOTEX 801 OR APPROVED EQUAL. ALTERNATIVELY, AN 8 INCH BED OF WELL GRADED SAND AND GRAVEL WITH GRAVEL UP TO 3" IS ACCEPTABLE.

WHERE BEDROCK IS ENCOUNTERED, RIP RAP MAY BE OMMITTED.

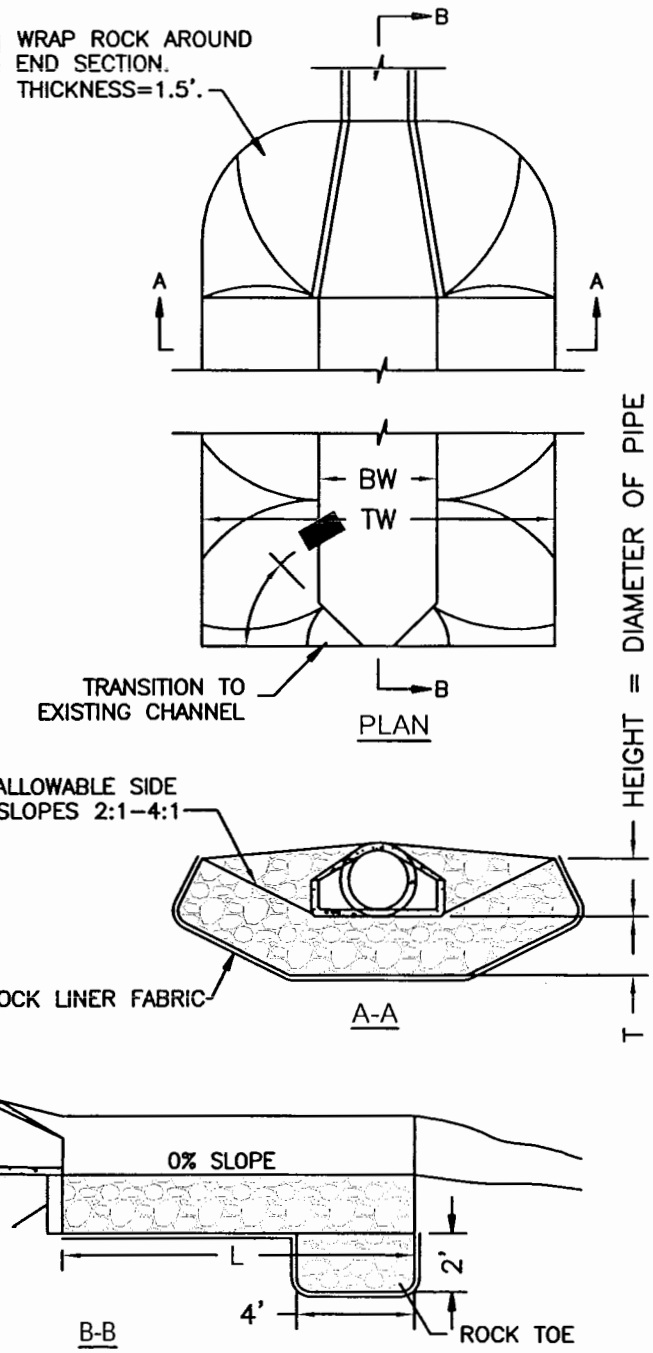

Approved 10/01/16 Date	City of Columbia Public Works Department	RIP RAP WITH FILTER FABRIC	530.03
Revisions			

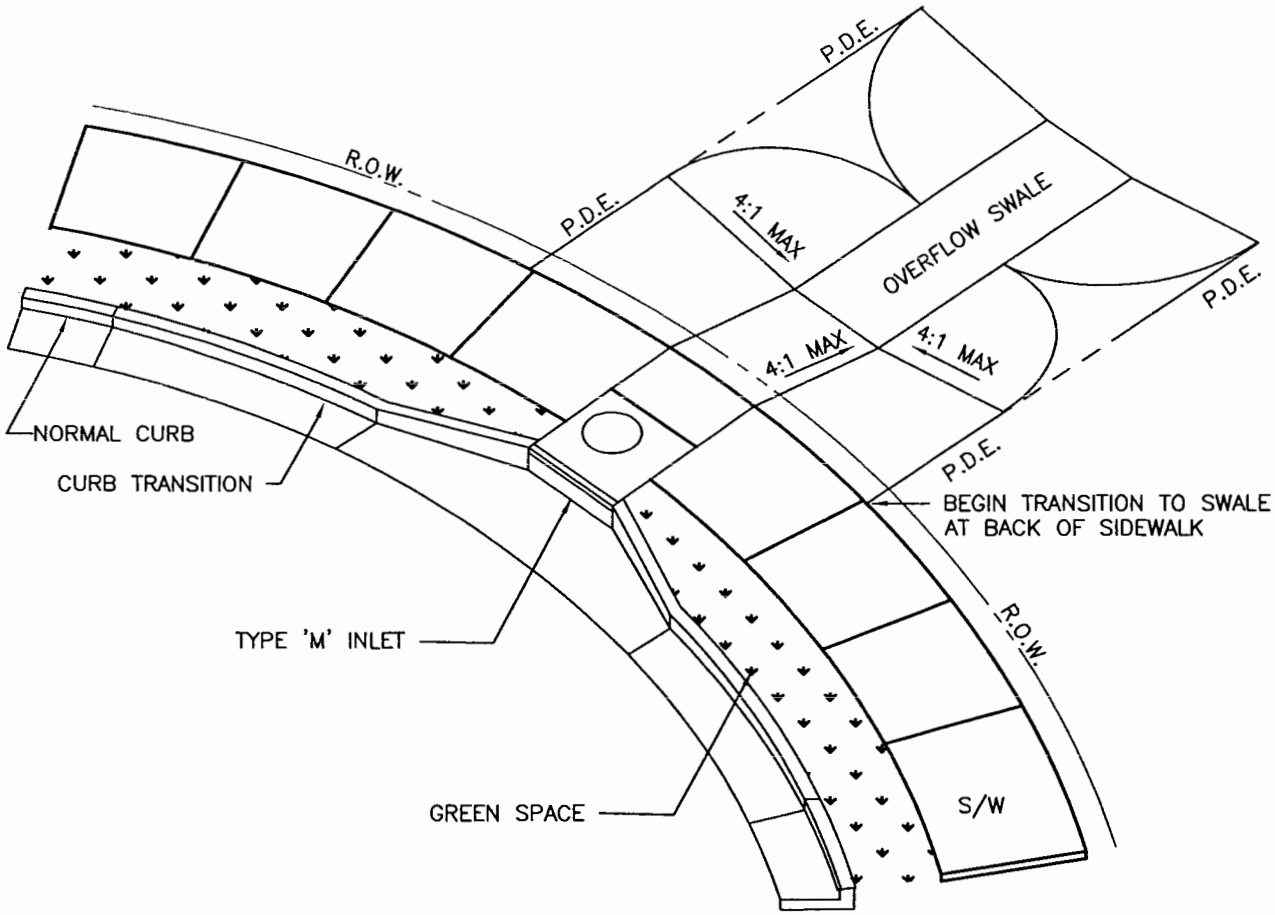

Approved 10/01/16 Date	City of Columbia Public Works Department	OVERFLOW SWALE AT CUL-DE-SAC	530.04
Revisions			

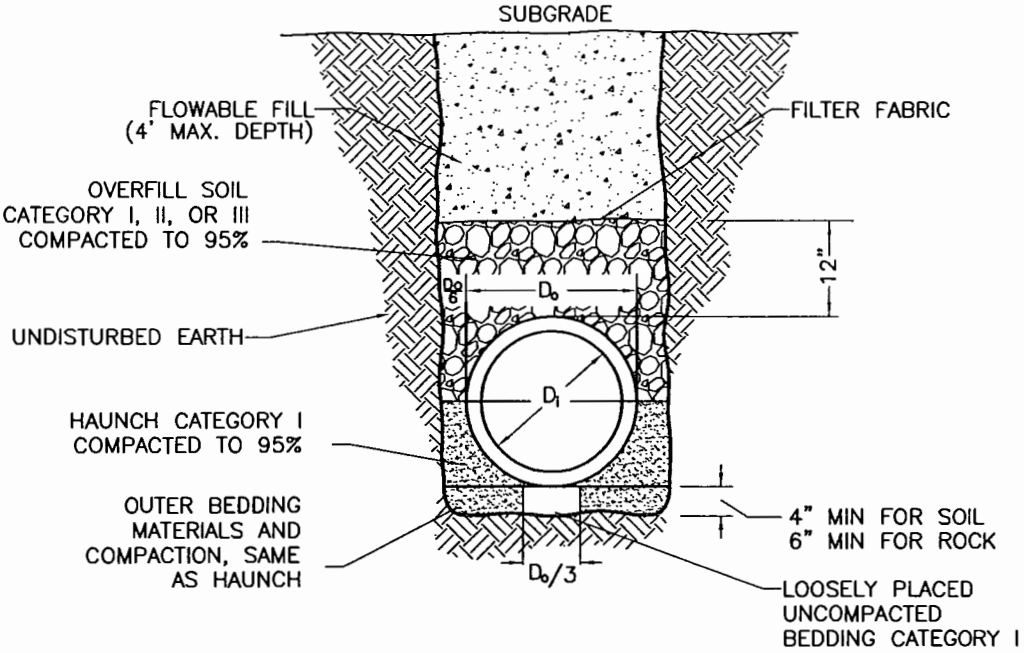

RIGID PIPE

PIPE DIAMETER	PAYLINE/ MIN. TRENCH WIDTH	MAX. TRENCH WIDTH
12"–36"	D_o+12"	D_o+24"
42"–72"	D_o+(D_o/3)	D_o+30"
72"+	D_o+(D_o/3)	D_o+48"

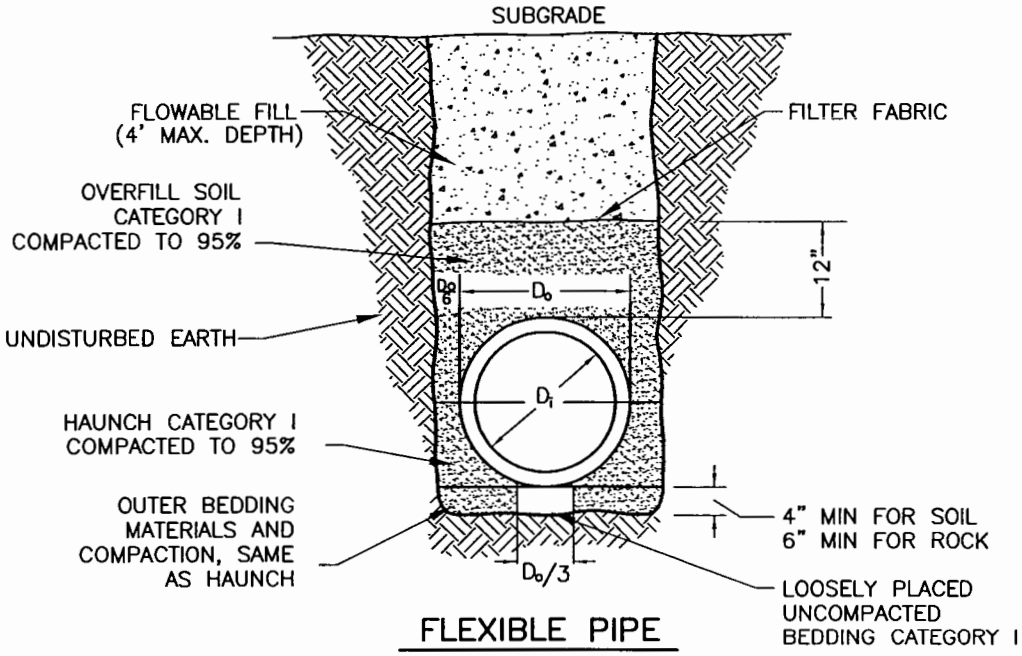

FLEXIBLE PIPE

Approved	Date
	10/01/16

Revisions

City of Columbia
Public Works Department

PIPE EMBEDMENT
(In the Right of Way)

540.01

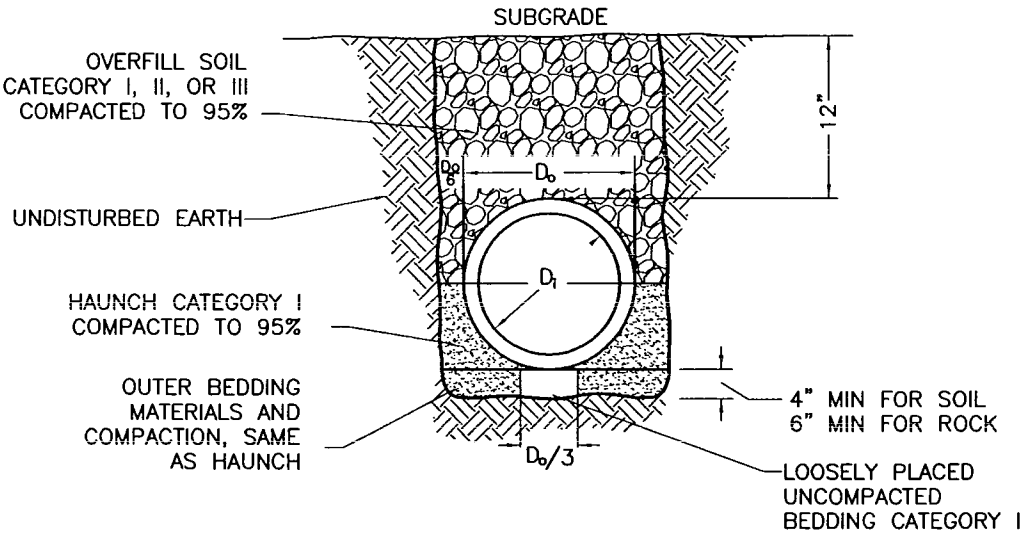

RIGID PIPE

PIPE DIAMETER	PAYLINE/ MIN. TRENCH WIDTH	MAX. TRENCH WIDTH
12"–36"	D_o+12"	D_o+24"
42"–72"	D_o+(D_o/3)	D_o+30"
72"+	D_o+(D_o/3)	D_o+48"

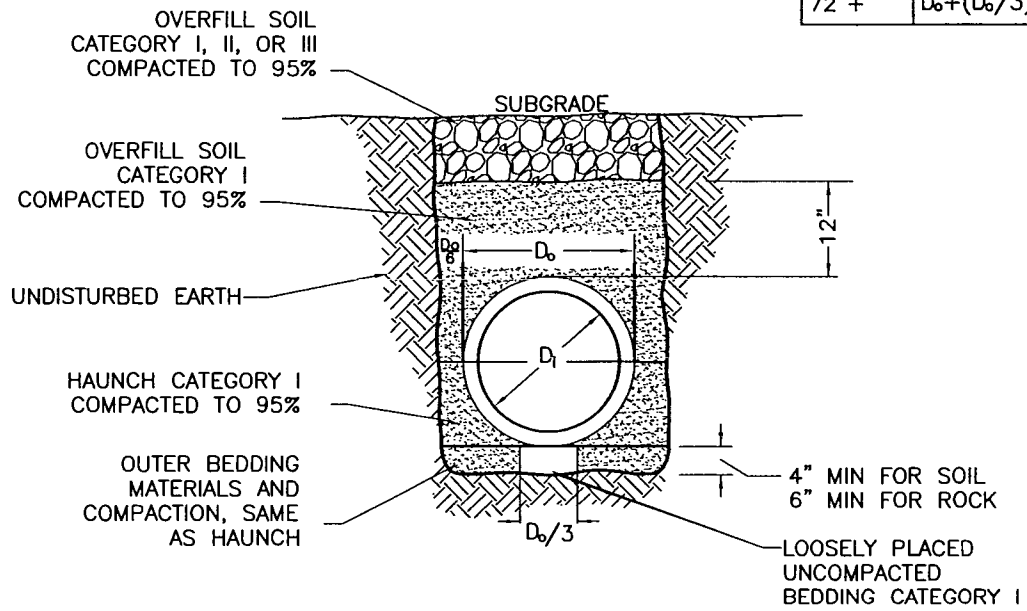

FLEXIBLE PIPE

Approved 10/01/16 Date	City of Columbia Public Works Department	PIPE EMBEDMENT (Out of the Right of Way)	540.02
Revisions			

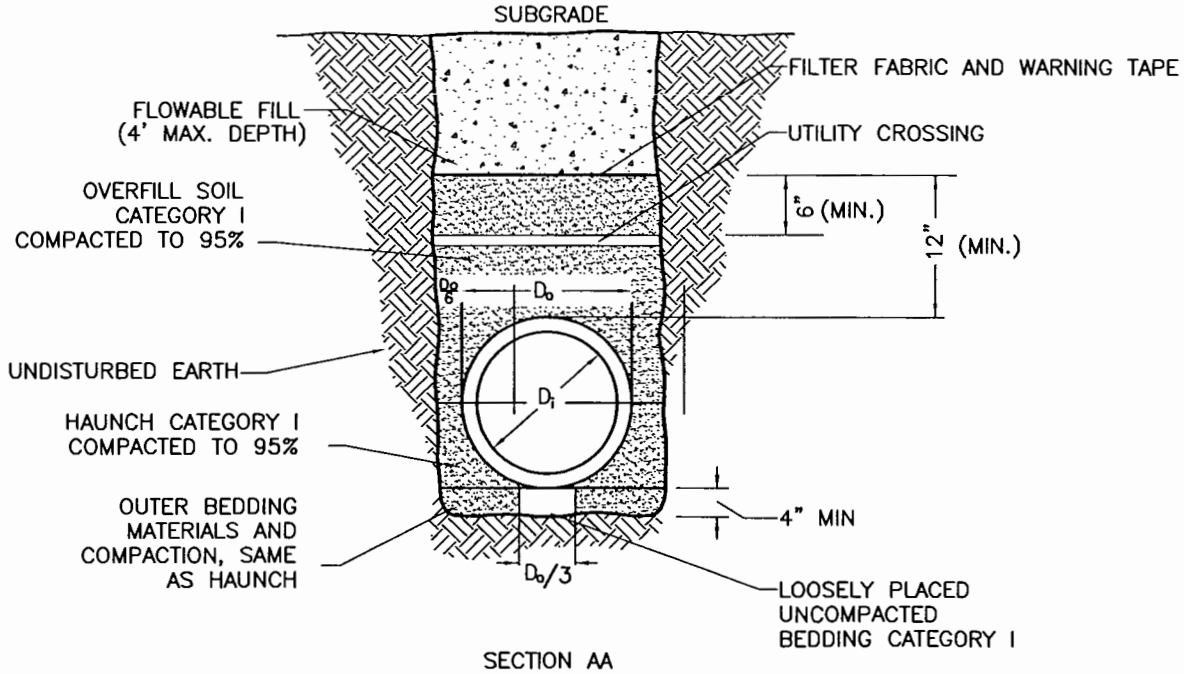

SECTION AA

PIPE DIAMETER	PAYLINE/ MIN. TRENCH WIDTH	MAX. TRENCH WIDTH
12"–36"	D_o+12"	D_o+24"
42"–72"	D_o+(D_o/3)	D_o+30"
72"+	D_o+(D_o/3)	D_o+48"

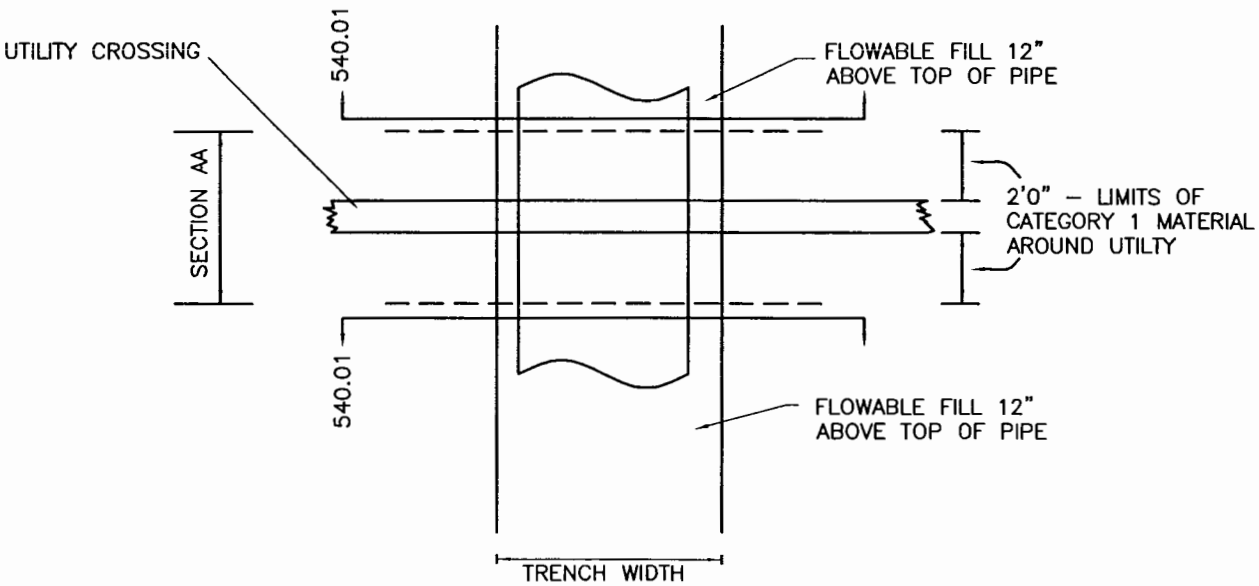

Approved	Date
	10/01/16

Revisions

City of Columbia
Public Works Department

UTILITY CROSSING
(In the Right of Way)

541.01

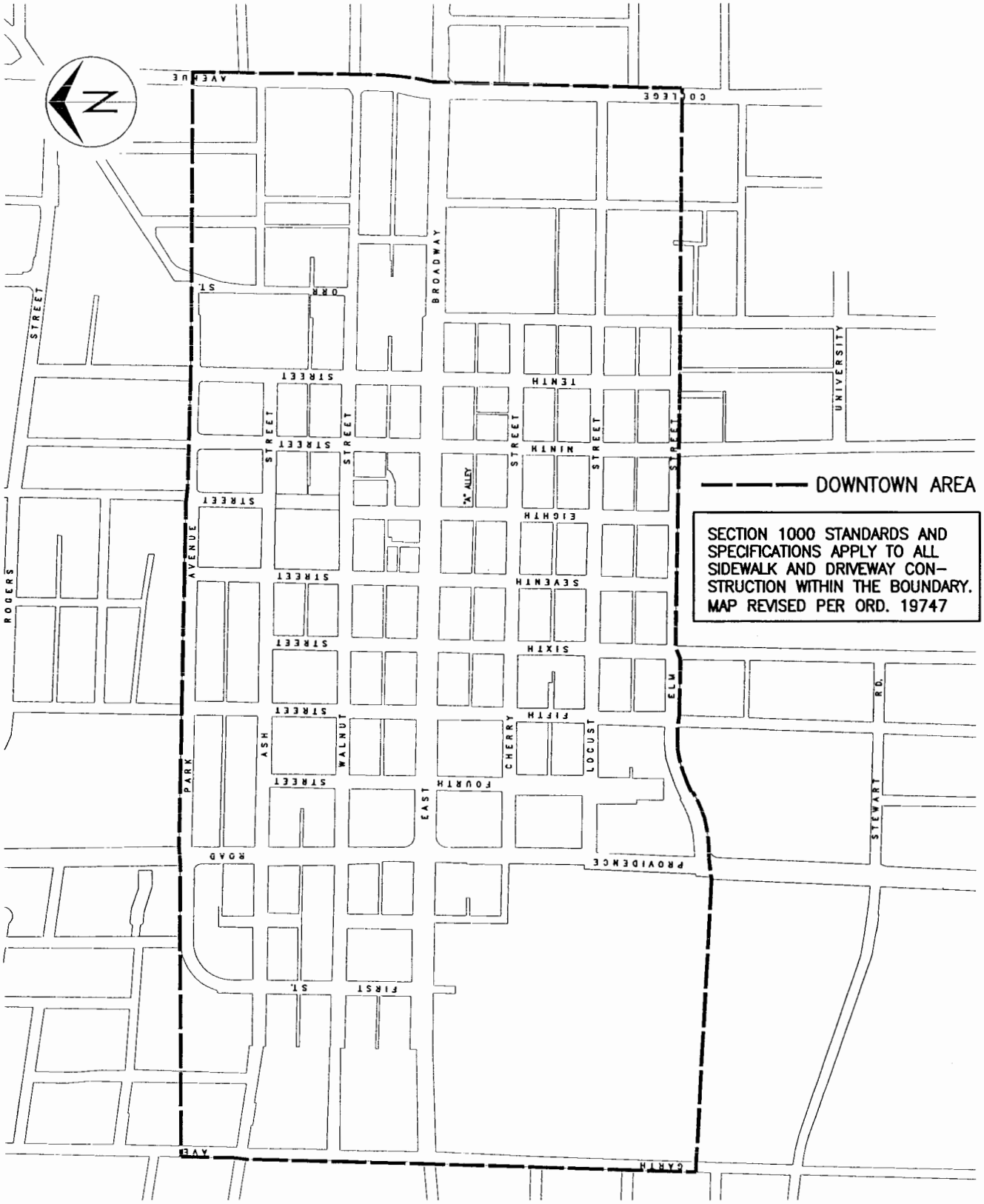

Approved 10/01/16 Date	City of Columbia Public Works Department	DOWNTOWN AREA MAP	1000.01A
Revisions			

DOWNTOWN SIDEWALK SPECIFICATIONS

SCOPE

The following Downtown Specifications and Standards are to be used for sidewalk, driveway and curb construction or replacement in the Downtown Area as outlined on drawing 1000.01A. All work within the Right of Way shall be in conformance with the City of Columbia Street and Storm Sewer Specifications and Standards, and these Downtown Sidewalk Specifications and Standards. If a conflict occurs the Downtown Sidewalk Specifications and Standards will govern.

CURBS

The curbs will be placed monolithically with the sidewalk and a saw joint will be provided 6-inches behind the face of the curb for the length of the curb. The curb shall extend a minimum of 6-inches above the existing pavement and 12-inches below the surface of the pavement. Drawing 1000.02 shows curb and sidewalk. Any variations from this standard must have the prior approval of the Director of Public Works.

CONCRETE

All concrete shall be MoDOT pavement concrete.

SIDEWALK REMOVAL AND REPLACEMENT

Whenever sidewalk is removed and replaced, removals must be made along existing saw joints. Diagonal saw cuts and partial panel replacements are not allowed.

TEXTURE

The sidewalk surface texture required shall be that achieved by brooming with a stiff or medium-stiff broom. The direction of brooming shall be transverse to the long axis of the sidewalk. All edges except sawed construction joints shall be worked with an edging tool to a 1/4-inch radius.

FINISHING OPERATIONS

Concrete finishing operations on downtown sidewalks is extremely critical. The contractor must assume the highest level of diligence in performing finishing operations to produce a high quality, durable surface.

Once the concrete has been placed, it shall be immediately struck off using a uniform strike off device free from any defects. During the strike off operation, a minimum of one inch surcharge must be maintained in front of the strike off screed. The strike off screed operations should, in most instances, seal the surface. Immediately following the strike off operation, a magnesium or aluminum bull float should be used to complete the sealing and consolidation of the surface.

This bull floating must be done prior to bleed water coming to the surface. If needed, in the Engineer's judgement, the Engineer will require a ten foot straight edge to be used immediately following the bull floating operation.

Following the evaporation of the bleed water and when the fresh concrete will support normal foot pressure with a maximum 1/8 inch indentation, the wood floating operations should be commenced, followed by the magnesium float, and brooming with a medium bristle, high quality concrete finishing broom.

The acceptable tolerance for the surface of the sidewalk area is 1/8 inch in ten feet as determined by a ten foot straight edge checking the concrete sidewalk or other area in any direction.

CONTROL JOINTS

Control joints are to be sawed to a minimum depth of 1-inch. Joints shall be sawed as soon as the concrete can withstand raveling. Joints shall be cleaned and sealed immediately following sawing. Proper care must be taken to ensure that these saw joints are uniform and straight. The following guidelines will control the size of the sidewalk pads to govern the sawing:

From 0 to 6 feet wide -
no longitudinal joint is required and the traverse joint will be at even intervals equal to the width of the sidewalk.

From 6'1" to 10'4" -
a centerline longitudinal joint is required. A transverse saw joint is required at the same distance as one-half the width of the sidewalk.

From 10'5" and up -
the longitudinal joints will be sawed to provide a minimum of 42-inches and a maximum of 5-feet between longitudinal saw joints. The transverse saw joint will be provided to form square sidewalk pads. In addition, whenever poles, fire hydrants, meters, tree grates or other obstacles are encountered, the sawing may need to be altered to control cracking at these obstacles.

EXPANSION JOINT

Expansion joint shall be ½-inch premolded fiber conforming to ASTM D2628 or D1751 of the perforated type so that the upper ½-inch can be removed and joint sealant can be placed over the expansion joint for a uniform seal. Expansion joints shall be installed along buildings, at driveways, at ramps, at structures and at intervals not to exceed 75 feet.

JOINT SEALANT

Joint sealant is required in all control, expansion and construction joints. Joint sealant shall be light gray in color. Joint sealant shall be a one or two component polysulfide polymer sealant or a one or two component polyurethane prepolymer sealant, Horn Daraseal-V or Vulkem Sealant or approved equal. Joint sealant shall be installed in accordance with manufacturer's specifications. A resilient closed cell foam backing rod, Etha Foam or approved equal, shall be used in all saw joints and placed to a depth equal to the width of the joint.

SIDEWALK ACCESSIBILITY

Accessible Sidewalk Ramps shall be provided at all intersections. Cross slopes of sidewalks shall not exceed 1:50. The preferred minimum downtown sidewalk width is 10 ft.

BLOCK OUT FOR TREES

Block outs for tree grates shall be provided in conformance with the approved downtown plan. The configuration of the block out is shown on drawings 1000.09, 1000.10A and 1000.10B. Tree grates shall be provided by the developer. Trees and soil backfill will be provided by the City.

TREES

Tree selection shall be in accordance with City Staff recommendations which are based on proven desirable growth characteristics for urban use areas. All tree selections must be approved by the City prior to installation.

VAULTS

When a sidewalk is constructed over a basement vault. The structural stability of the vault and sidewalk shall be analyzed by an Engineer or Architect.

AUTHORITY

The Director of Public Works shall have the authority in the interest of safety and maintenance to make technical refinements and modifications to these construction standards and methods during the time these standards are in effect.

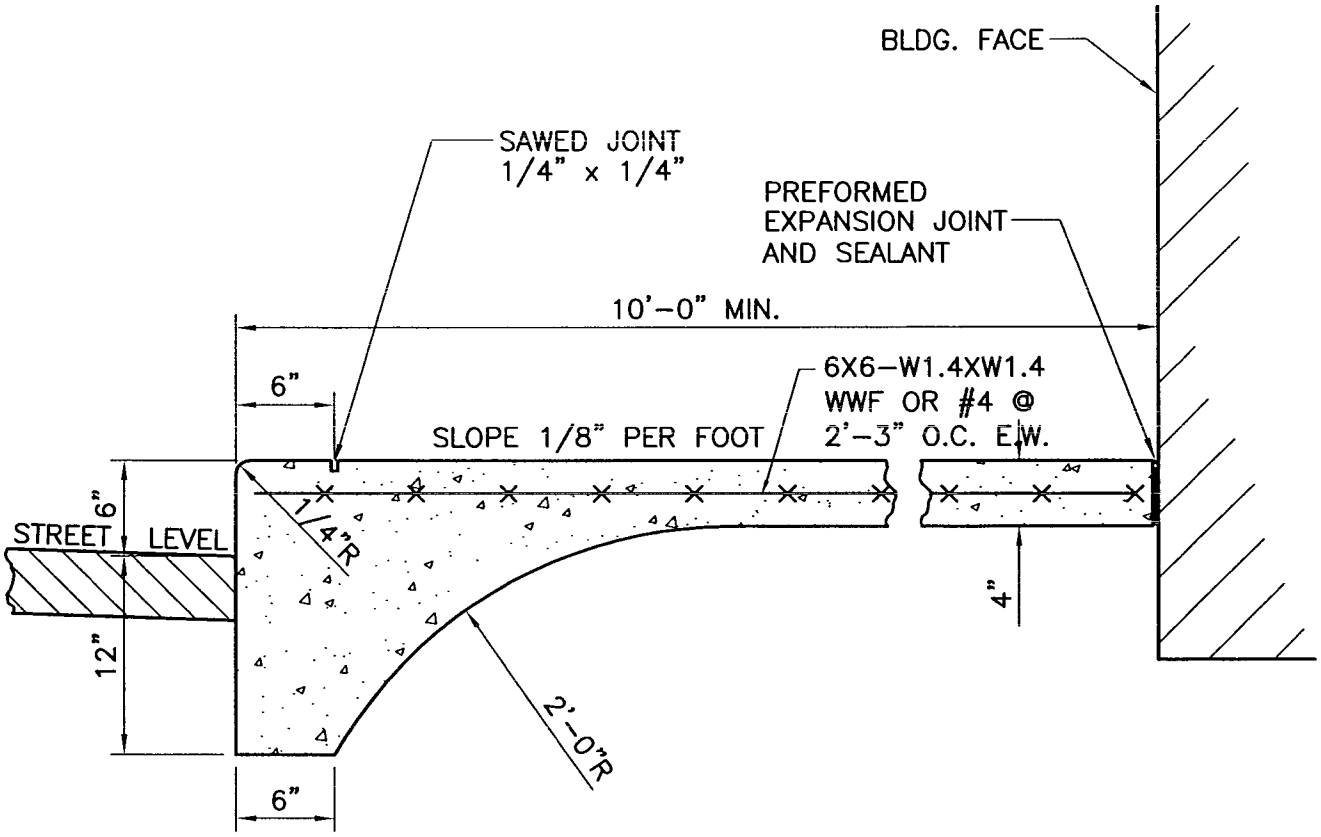

NOTES:

1. SIDEWALK CROSS SLOPE SHALL NOT EXCEED 2.00%.
2. SAW AND PATCH STREET PAVEMENT AS NECESSARY FOR CONSTRUCTION OF NEW CURB.
3. SEE JOINT DETAILS – 1000.03.
4. SEE SPECIFICATIONS – 1000.01B THRU 1000.01D.
5 NO STEEL TO BE PLACED THROUGH EXPANSION JOINT

Approved 10/01/16 Date Revisions	City of Columbia Public Works Department	DOWNTOWN SIDEWALK	1000.02

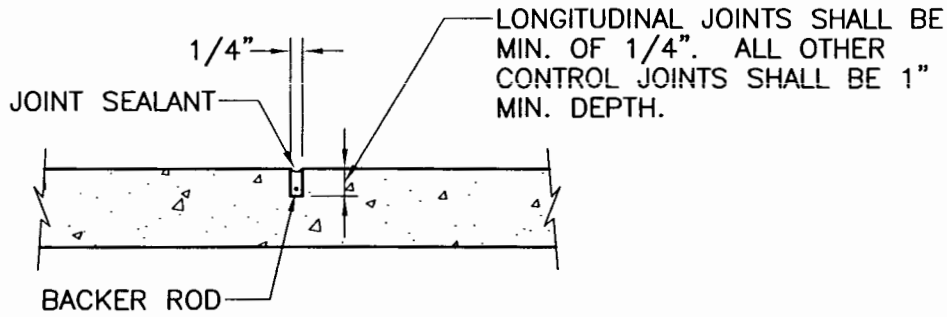

CONTROL JOINT

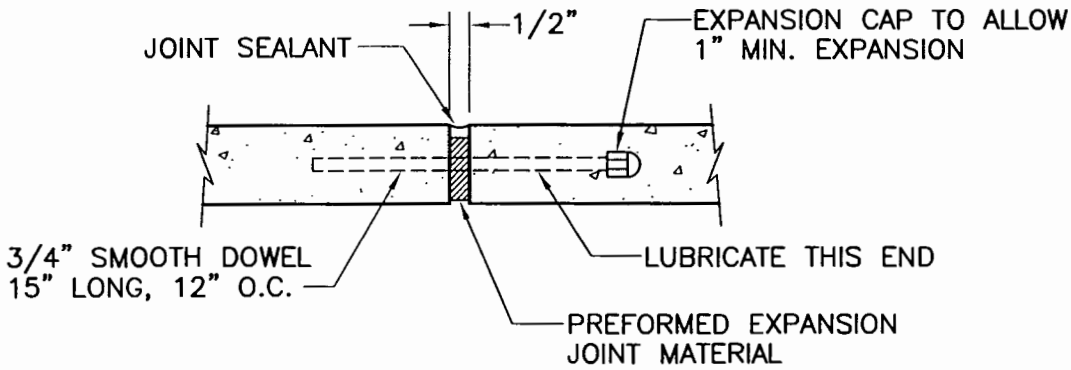

EXPANSION JOINT

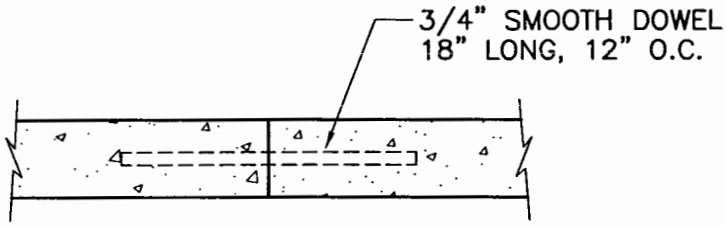

TRANSVERSE CONSTRUCTION JOINT

NOTES:

1. SEE SPECIFICATIONS – 1000.01B THRU 1000.01D.
2. ALL DRILLED DOWEL BARS SHALL BE EXPOXIED.

Approved 10/01/16 Date	City of Columbia Public Works Department	SIDEWALK JOINT DETAILS	1000.03
Revisions			

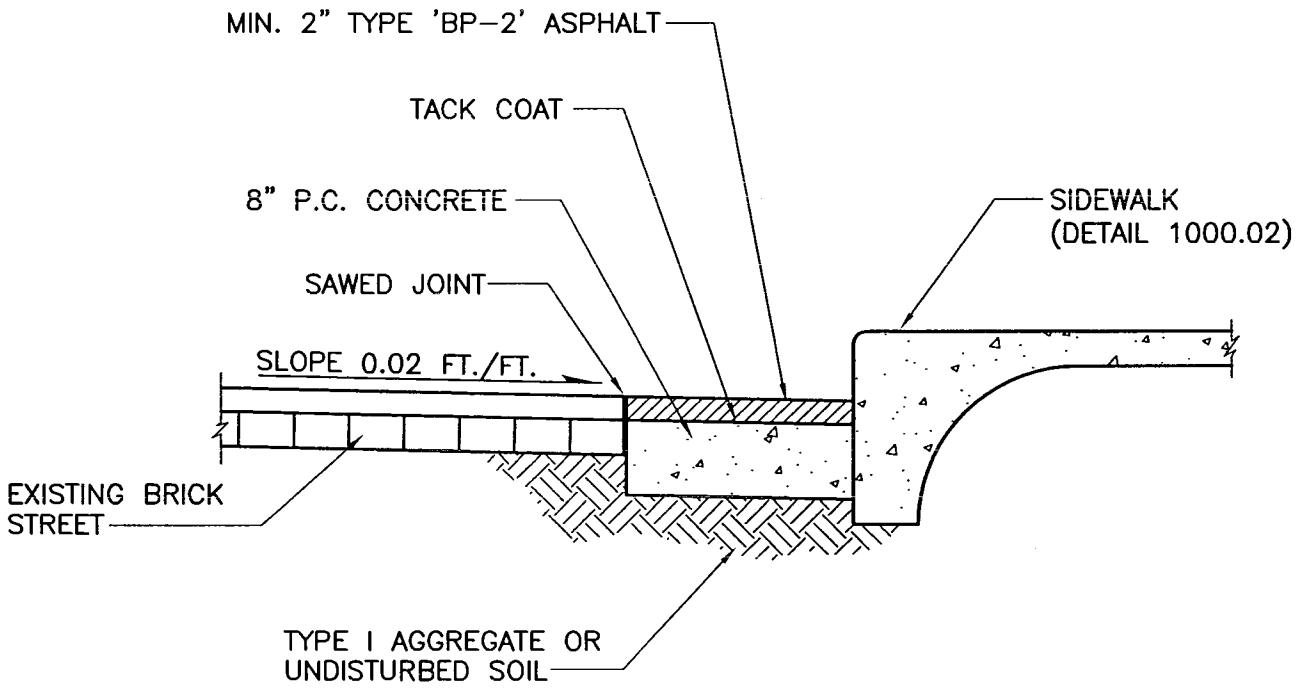

NOTE:

AREAS TO BE OVERLAID SHALL HAVE A TACK COAT OF SS-1 WATER BASED EMULSION APPLIED AT A RATE OF 0.2 GALLONS PER SQUARE YARD. THIS IS TO BE INCLUDED IN THE PRICE BID FOR "PATCHING AND LANE WIDENING" AND/OR "FULL DEPTH STREET PATCH FOR CONDUIT".

Approved 10/01/16 Date	City of Columbia Public Works Department	PAVEMENT PATCHING & LANE WIDENING	1000.04
Revisions			

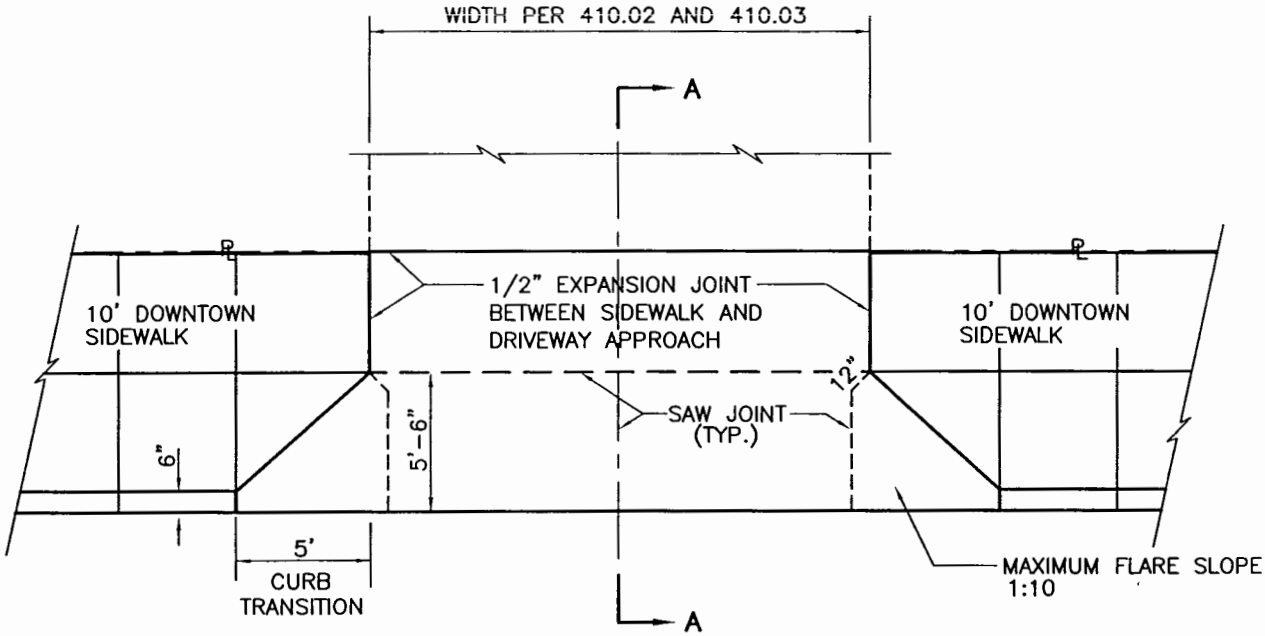

PLAN

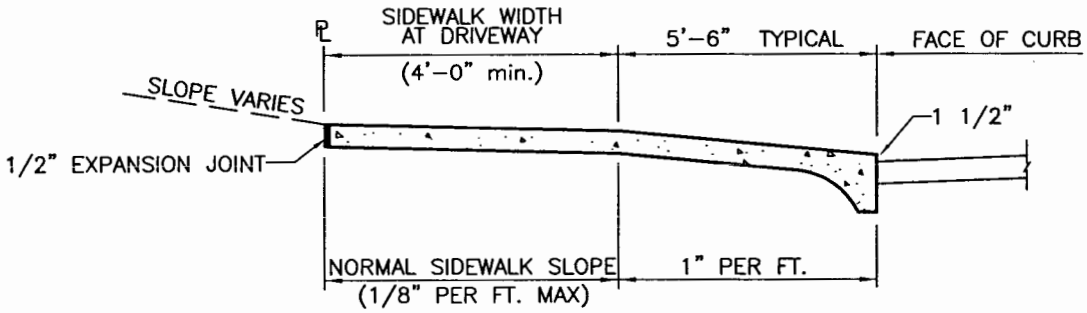

SECTION A–A

NOTES:

1. DRIVEWAY APPROACH SHALL BE 7" THICK MoDOT PAVEMENT CONCRETE.
2. SEE JOINT DETAILS – 1000.03.
3. ALL DRIVEWAY APPROACHES SHALL SLOPE TOWARD THE STREET.
4. ALL DRIVEWAY APPROACHES SHALL BE CONSTRUCTED TO ACCOMODATE SIDEWALKS. (EXISTING AND FUTURE)
5. OMIT 1 1/2" EDGE AT GUTTER IF DRIVE APPROACH ALSO SERVES AS ACCESSIBLE SIDEWALK RAMP.
6. DRIVEWAY MAY BE REINFORCED AT OWNERS OPTION. DO NOT REINFORCE ON CITY BID PROJECTS.
7. SIDEWALK CROSS SLOPE SHALL NOT EXCEED 2.00%.

Approved 10/01/16 Date	City of Columbia Public Works Department	DRIVEWAY AND ALLEY (Downtown)	1000.05
Revisions			

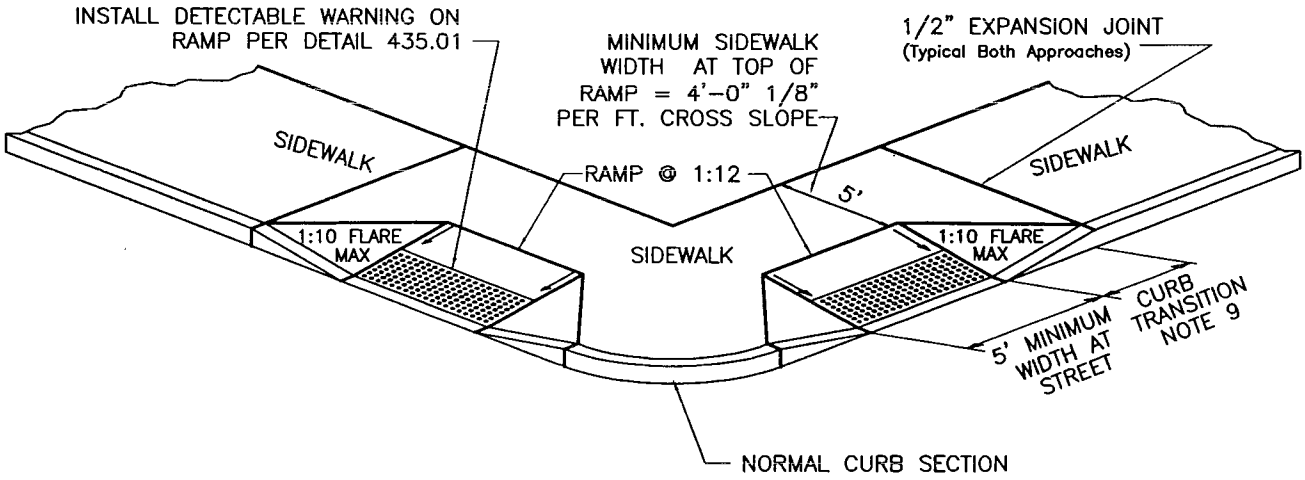

NOTE:

1. RAMP, LANDING AND AREA BETWEEN RAMPS SHALL BE 6" THICK REINFORCED W/ #4 @ 12" O.C. MoDOT PAVEMENT CONCRETE.
2. SEE DETAIL 1000.03 FOR JOINT DETAILS.
3. MAXIMUM RAMP CROSS SLOPE IS 2.00%.
4. ALL SLOPES ARE MEASURED FROM THE HORIZONTAL.
5. RAMP LENGTH IS DEPENDENT ON 1:12 MAX. SLOPE. USE FLATTER WHEN POSSIBLE.
6. LANDING AREA AT TOP OF RAMP SHALL BE 5'-0" MIN WIDTH, CROSS SLOPE OF LANDING SHALL NOT EXCEED 2.00%.
7. TYPE "A" RAMP NOT APPLICABLE IF SIDEWALK WIDTH DOES NOT PROVIDE 5'-0" LANDING AT THE TOP OF RAMP. USE TYPE "B" RAMP.
8. RAMP EXTENDS INTO SIDEWALK, FLARE SLOPE MUST NOT EXCEED 1:10.
9. CURB TRANSITION LENGTH IS DEPENDENT ON 1:10 FLARE SLOPE

Approved 10/01/16 Date	City of Columbia Public Works Department	SIDEWALK RAMP Sidewalk at Back of Curb (Type A)	1000.06
Revisions			

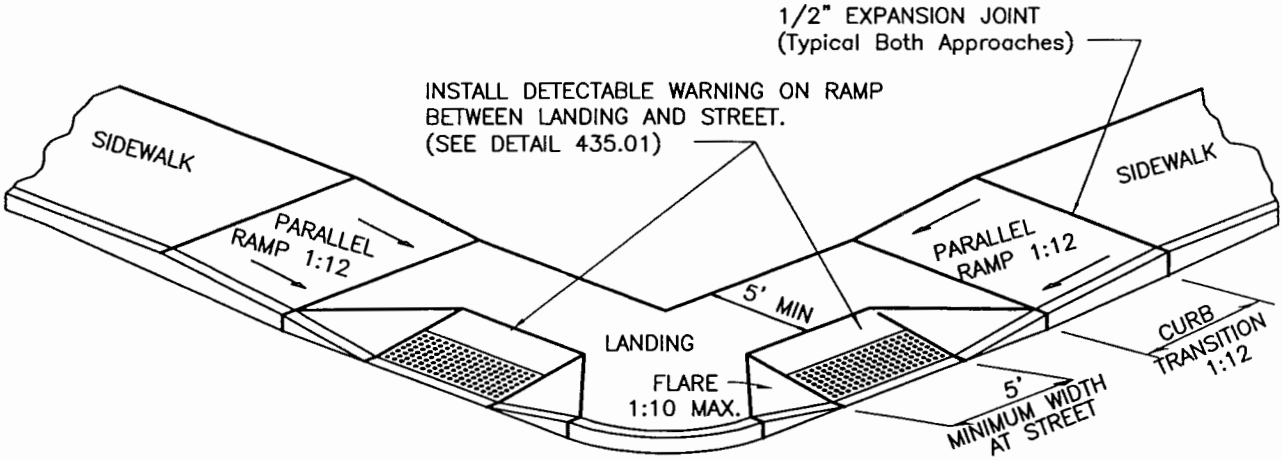

NOTE:

1. RAMP, LANDING AND AREA IN BETWEEN SHALL BE 6" THICK REINFORCED W/#4@12" O.C. MoDOT PAVEMENT CONCRETE.
2. EXPANSION JOINT SHALL BE 1/2" PREFORMED CORK OR BITUMINOUS EXPANSION JOINT MATERIAL.
3. MAXIMUM RAMP CROSS SLOPE IS 2.00%.
4. ALL SLOPES ARE MEASURED FROM THE HORIZONTAL.
5. RAMP SLOPE 1:12 MAX. USE FLATTER WHEN POSSIBLE.
6. LANDING AREA SHALL BE 5'-0" MIN WIDTH, CROSS SLOPE OF LANDING SHALL NOT EXCEED 2.00%.
7. TYPE "B" RAMP PROVIDES PARALLEL RAMPS TO REDUCE THE PERPENDICULAR RAMP LENGTH AND PROVIDE ADEQUATE LANDING.
8. RAMP EXTENDS INTO SIDEWALK, FLARE SLOPE MUST NOT EXCEED 1:10.

Approved 10/01/16 Date	City of Columbia Public Works Department	SIDEWALK RAMP Sidewalk at Back of Curb (Type B)	1000.07
Revisions			

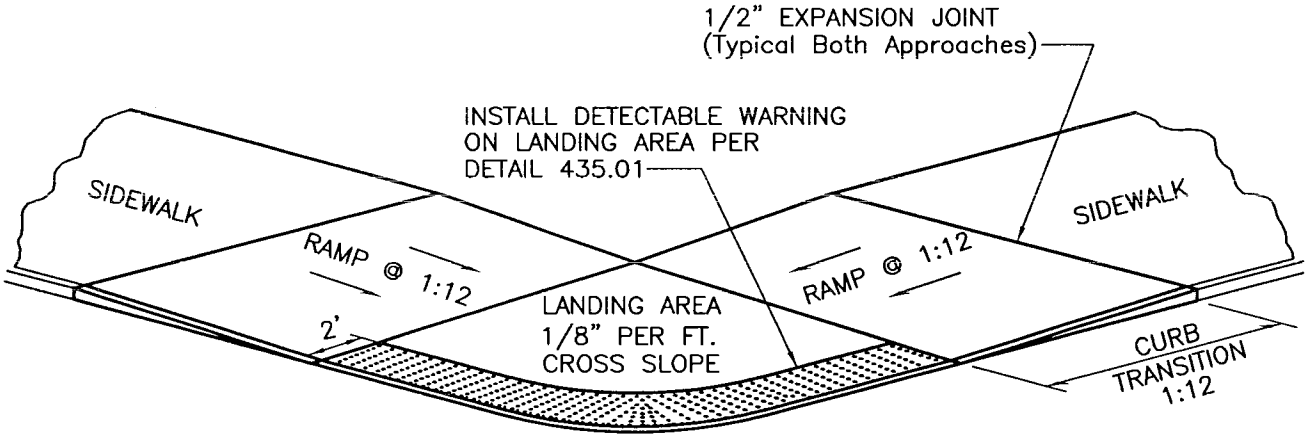

NOTE:

1. RAMP AND LANDING SHALL BE 6" THICK REINFORCED W/#4@12" O.C. MoDOT PAVEMENT CONCRETE.
2. EXPANSION JOINT SHALL BE 1/2" PREFORMED CORK OR BITUMINOUS EXPANSION JOINT MATERIAL.
3. MAXIMUM RAMP CROSS SLOPE IS 2.00%.
4. ALL SLOPES ARE MEASURED FROM THE HORIZONTAL.
5. RAMP LENGTH IS DEPENDENT ON 1:12 MAX. SLOPE. USE FLATTER WHEN POSSIBLE.
6. LANDING AREA SHALL BE 5'-0" MIN WIDTH, CROSS SLOPE OF LANDING SHALL NOT EXCEED 2.00%.
7. USE TYPE "C" RAMP ONLY IF TYPE "A" & "B" ARE NOT FEASIBLE.

Approved 10/01/16 Date Revisions	City of Columbia Public Works Department	SIDEWALK RAMP Sidewalk at Back of Curb (Type C)	1000.08

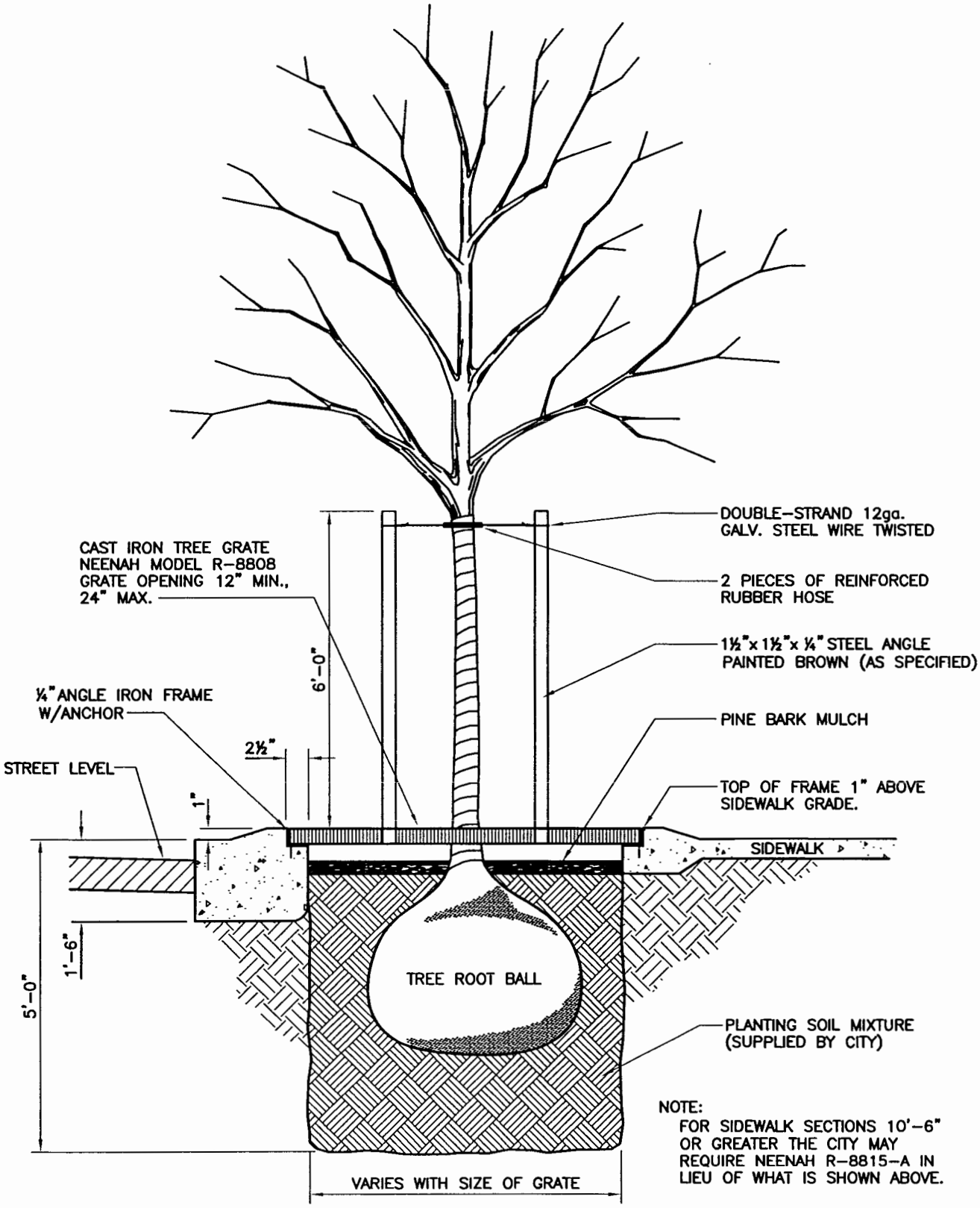

NOTE:
FOR SIDEWALK SECTIONS 10'-6" OR GREATER THE CITY MAY REQUIRE NEENAH R-8815-A IN LIEU OF WHAT IS SHOWN ABOVE.

Approved	10/01/16 Date	City of Columbia Public Works Department	TYPICAL DOWNTOWN TREE PLANTING DETAIL	1000.09
Revisions				

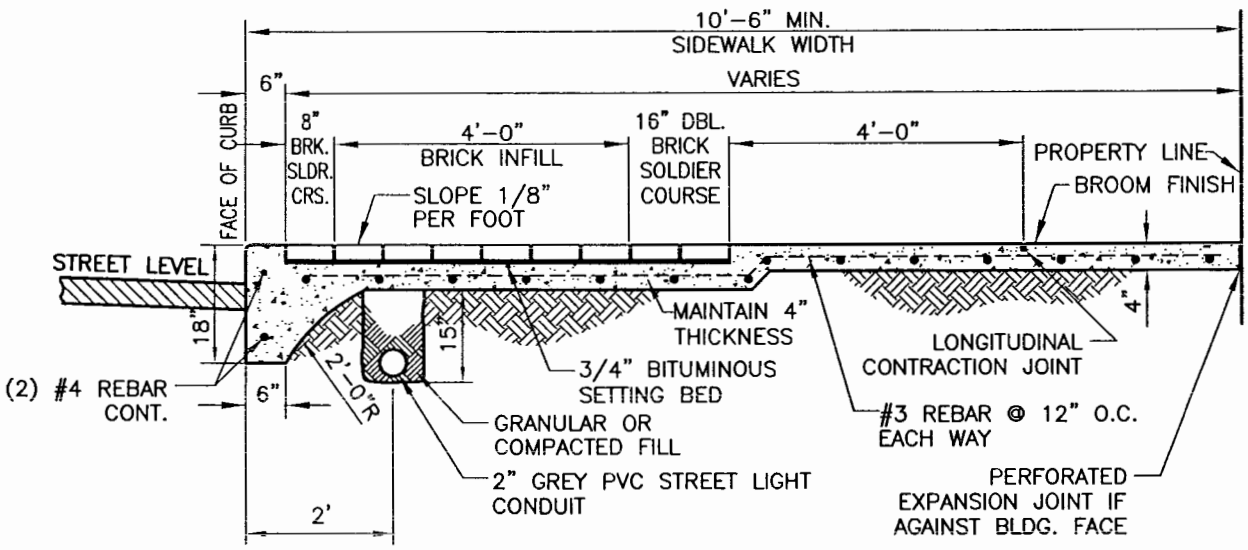

TYPICAL SECTION

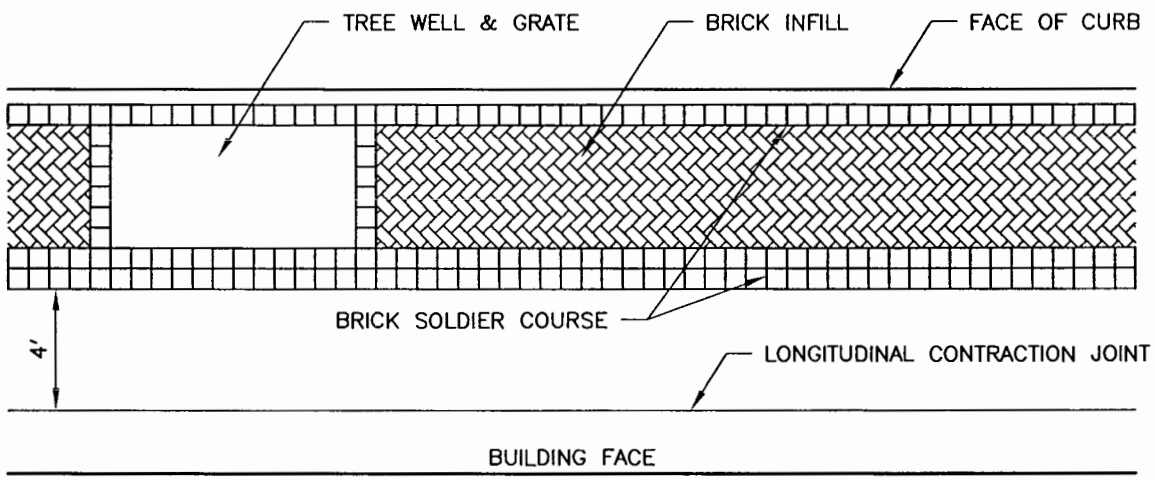

PLAN VIEW

NOTES:

1. SIDEWALK CROSS SLOPE SHALL NOT EXCEED 2.00% NOR BE LESS THAN 0.50%.
2. SAW AND PATCH STREET PAVEMENT AS NECESSARY FOR CONSTRUCTION OF NEW CURB.
3. SEE JOINT DETAILS – 1000.03.
4. SEE SPECIFICATIONS – 1000.01
5. NO STEEL TO BE PLACED THROUGH EXPANSION JOINT
6. FOR SIDEWALK SECTIONS LESS THAN 10'-6" A MODIFIED DETAIL WILL BE REQUIRED.

Approved 10/01/16 Date	City of Columbia Public Works Department	DOWNTOWN SIDEWALK - ALONG 8th STREET & BROADWAY	1000.10A
Revisions			

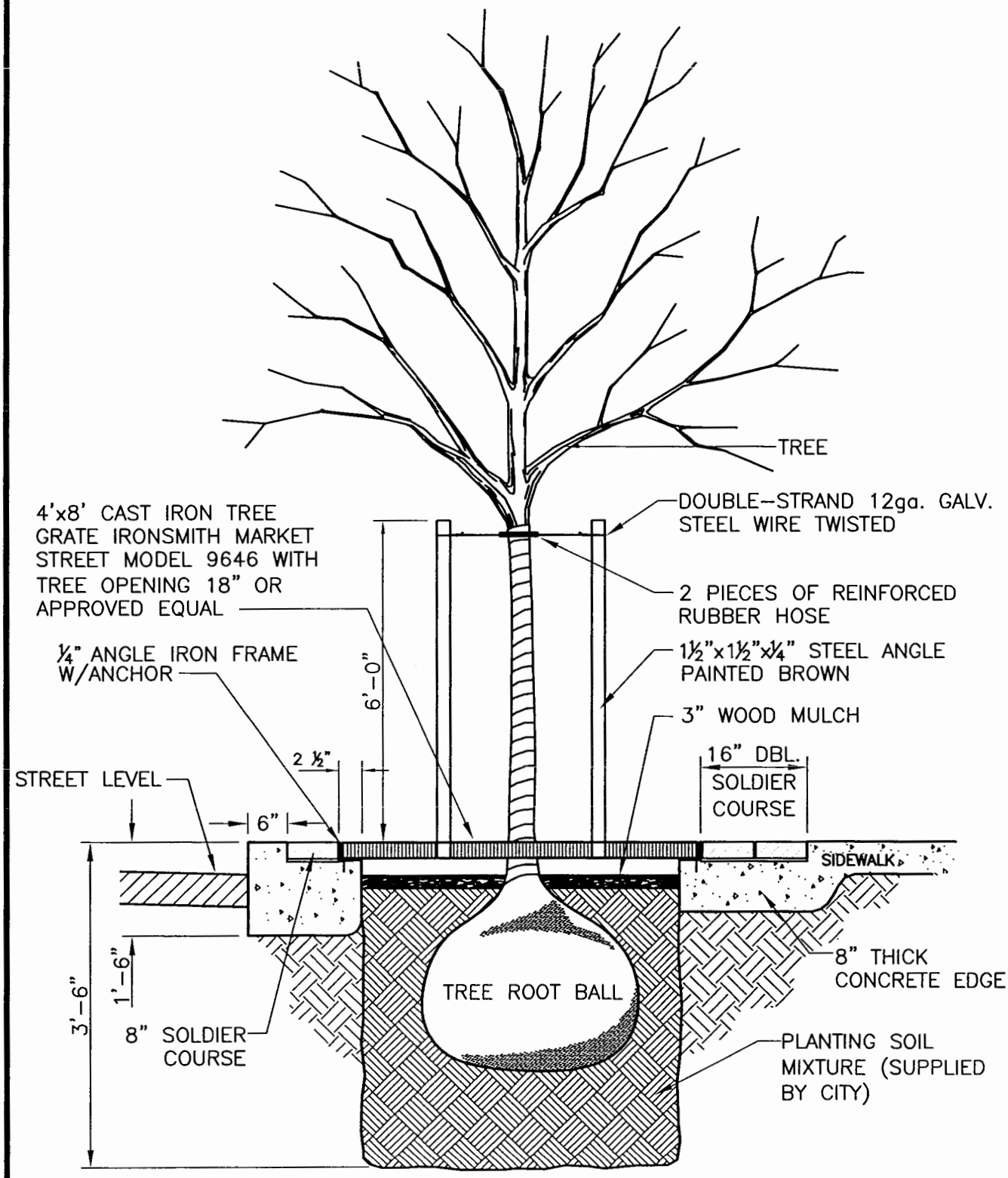

Approved 10/01/16 Date	City of Columbia Public Works Department	DOWNTOWN SIDEWALK - ALONG 8th STREET & BROADWAY	1000.10B
Revisions			

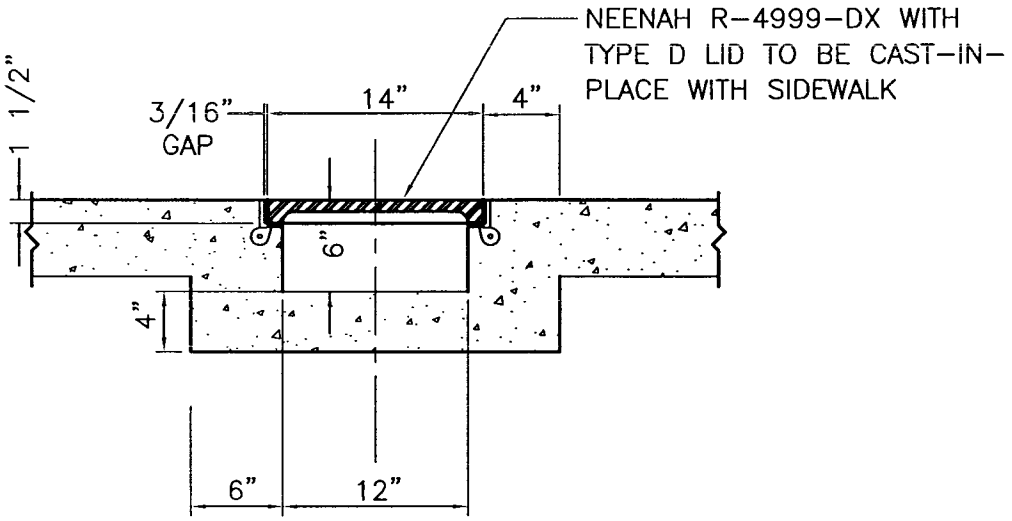

NOTE:

1. TRENCH GRATE CUT (IF NEEDED) SHALL BE LOCATED AT PROPERTY LINE.

Approved 10/01/16 Date	City of Columbia Public Works Department	TRENCH GRATE	1000.16
Revisions			

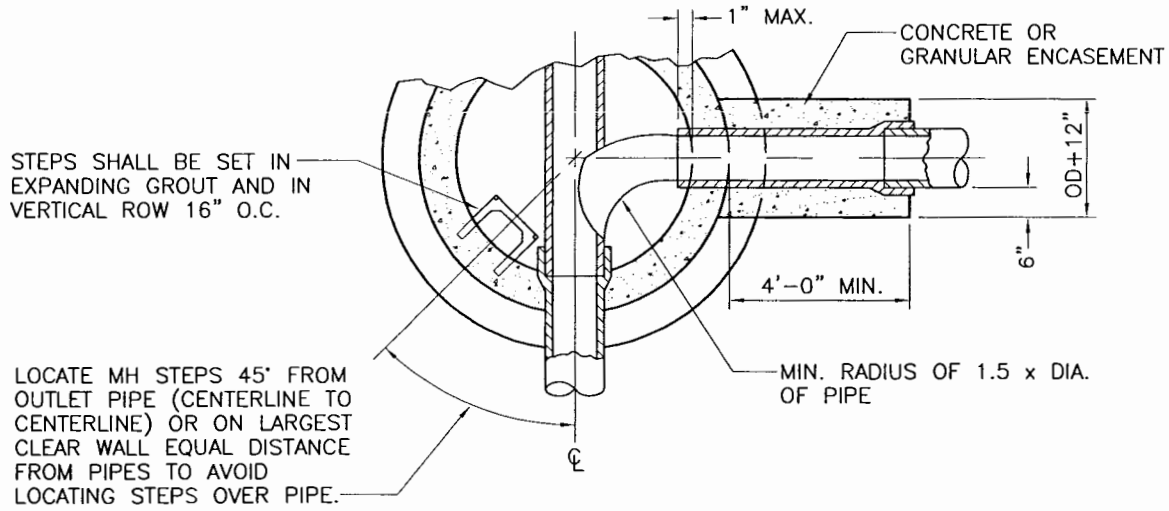

HORIZONTAL SECTION

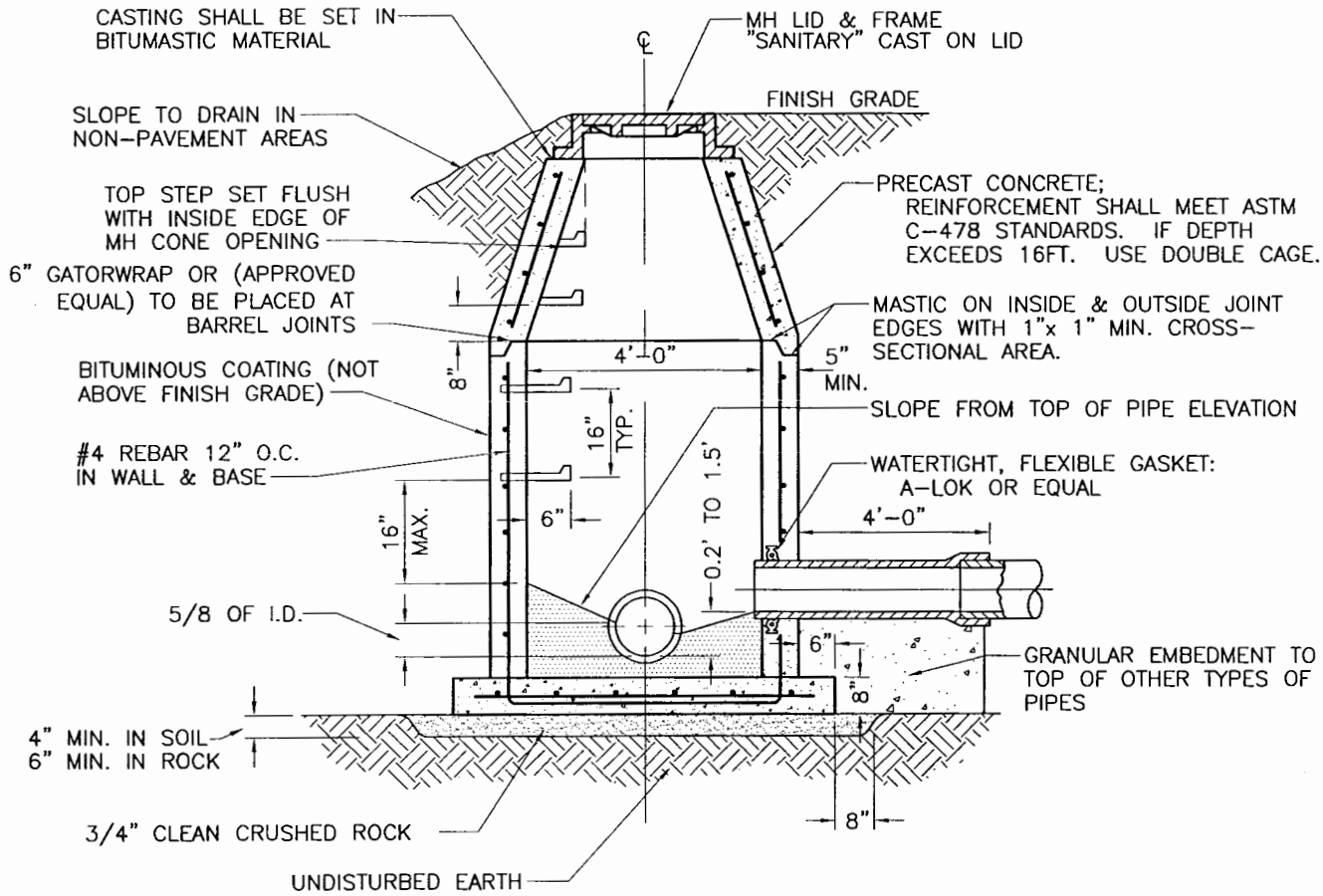

VERTICAL SECTION

DHS Approved	10/01/16 Date	City of Columbia Public Works Department	STANDARD MANHOLE	1
Revisions				

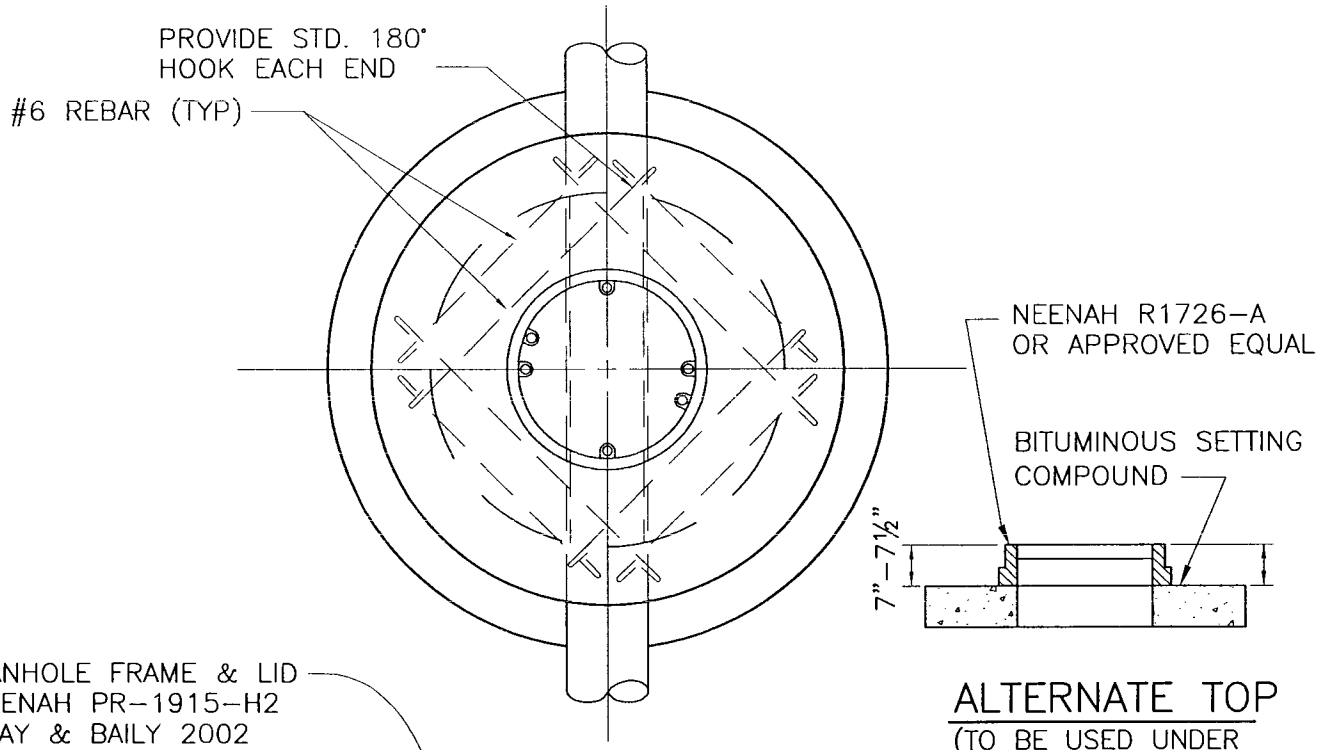

ALTERNATE TOP
(TO BE USED UNDER PAVEMENTS ONLY)

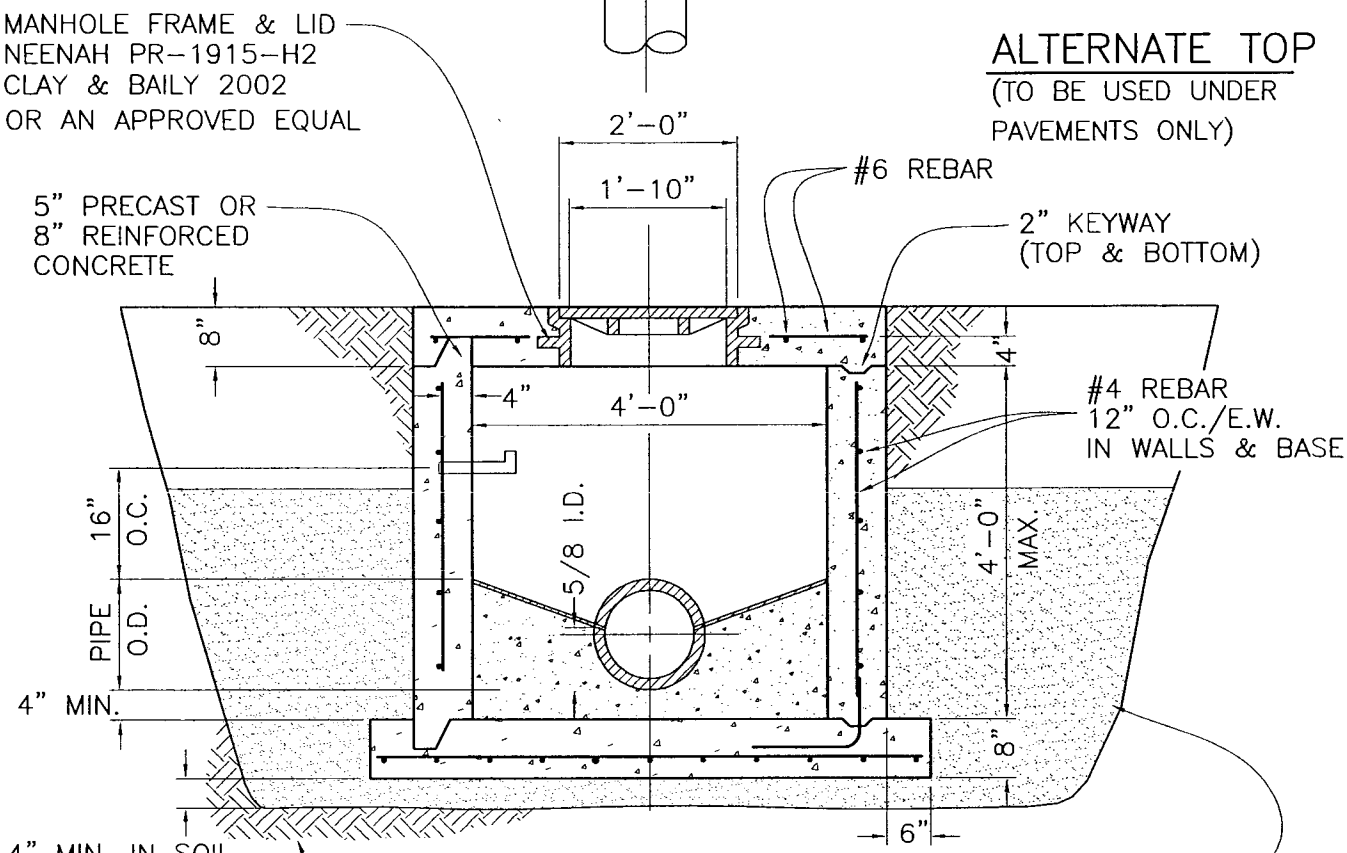

VERTICAL SECTION

Approved 10/01/16 Date	City of Columbia Public Works Department	FLAT TOP SHALLOW MANHOLE	2
Revisions			

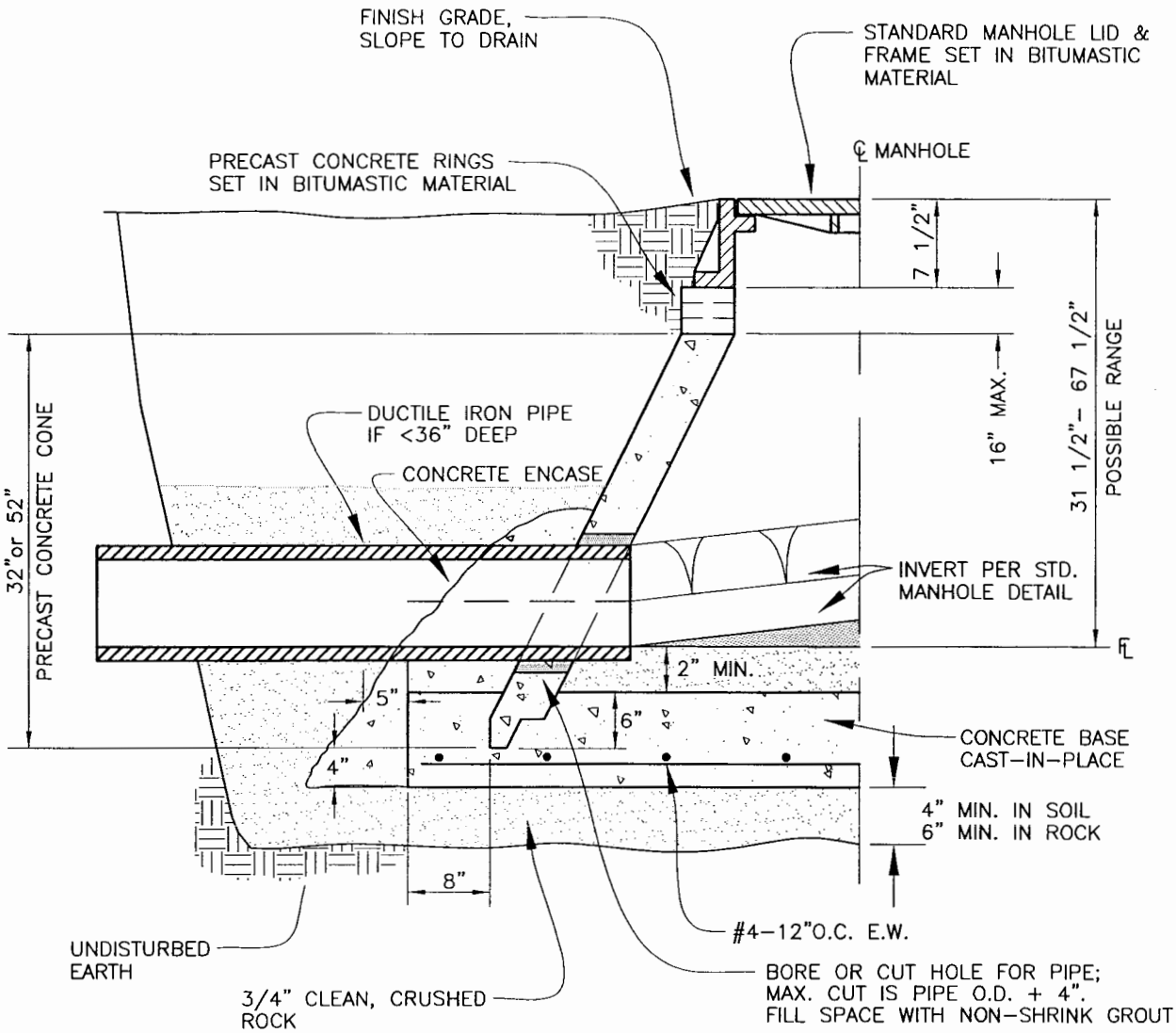

VERTICAL HALF–SECTION

Approved 10/01/16 Date	City of Columbia Public Works Department	STANDARD SHALLOW MANHOLE	3
Revisions			

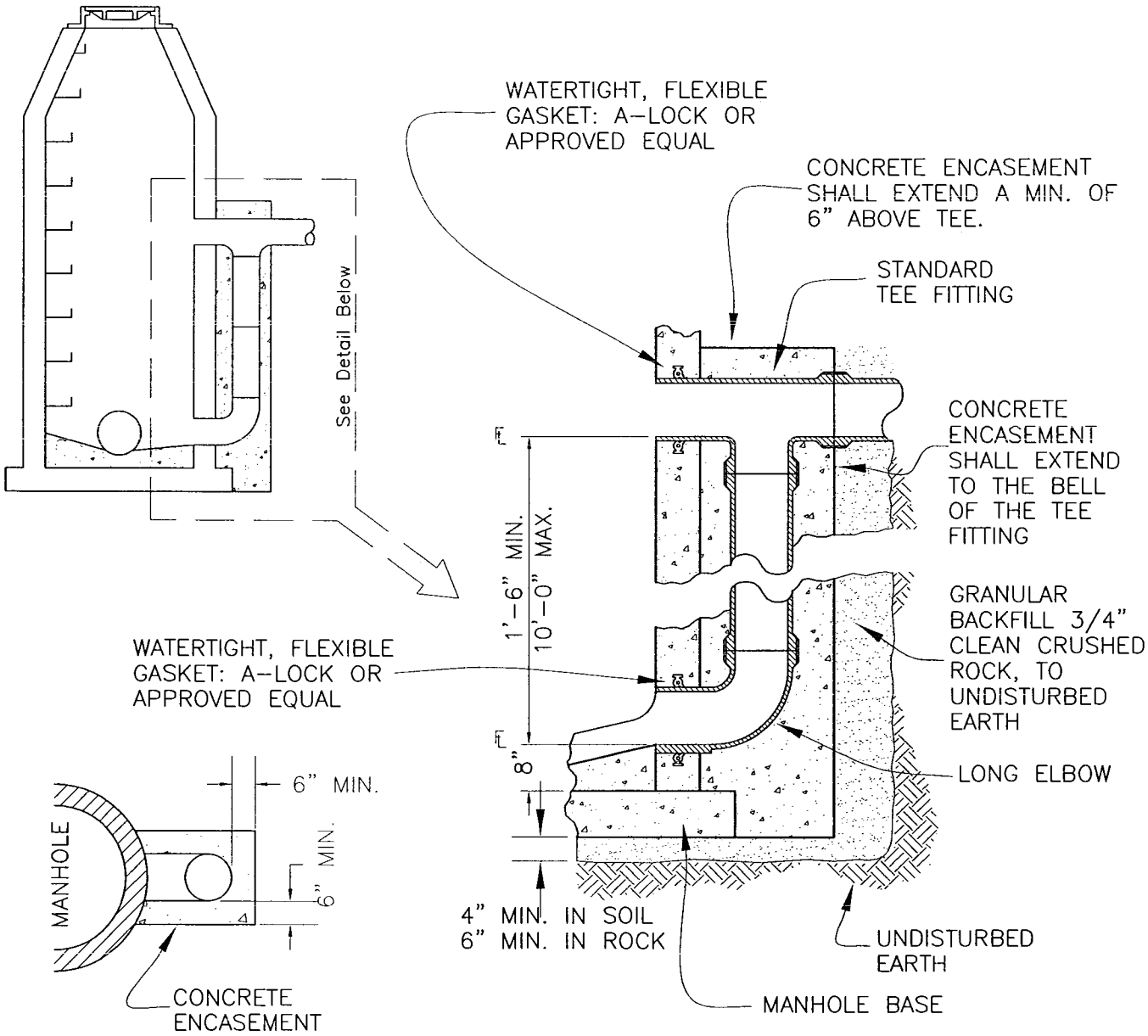

NOTES:

1. DROP INLET PIPE TO BE SAME SIZE AND MATERIAL AS SEWER MAIN.

2. ALIGNMENT OF TEE: DROP INLET PIPE AND LONG ELBOW MAY BE ADJUSTED TO MAXIMUM OF 5% DEFLECTION TO COMPENSATE FOR SLOPE OF SEWER LINE.

Approved 10/01/16 Date	City of Columbia Public Works Department	STANDARD DROP MANHOLE	4
Revisions			

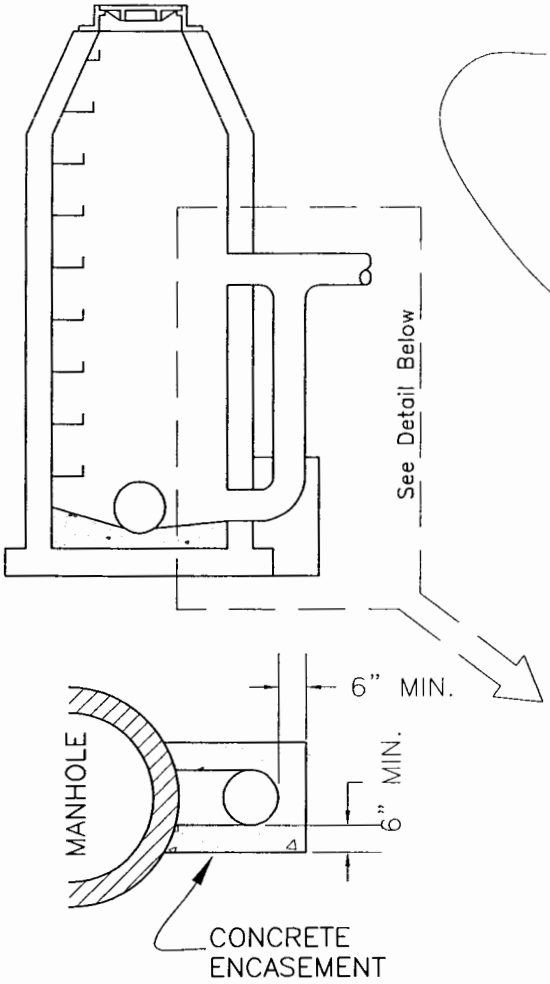

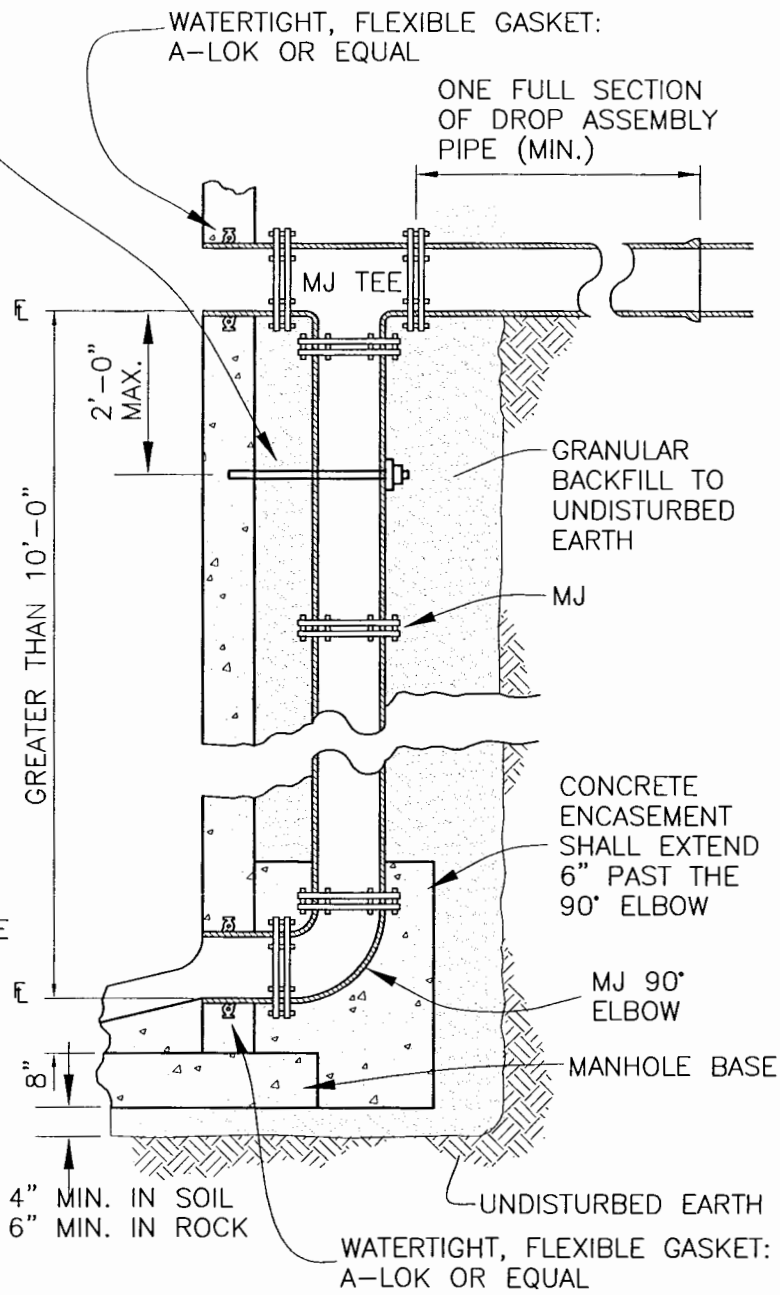

NOTES:

1. DROP INLET PIPE TO BE SAME SIZE AND MATERIAL AS SEWER MAIN.
2. ALIGNMENT OF TEE: DROP INLET PIPE AND LONG ELBOW MAY BE ADJUSTED TO MAXIMUM OF 5% DEFLECTION TO COMPENSATE FOR SLOPE OF SEWER LINE.
3. PIPE MATERIAL IN THE DROP ASSEMBLY SHALL CONFORM TO SECTION 505.2.b OF THE STANDARD SPECIFICATIONS.
4. DROP ASSEMBLY SHALL UTILIZE MECHANICAL COUPLINGS. THE COUPLINGS SHALL BE A MEGALUG MECHANICAL JOINT RESTRAINT, OR APPROVED EQUAL.

Approved 10/01/16 Date	City of Columbia Public Works Department	DEEP DROP MANHOLE	5
Revisions			

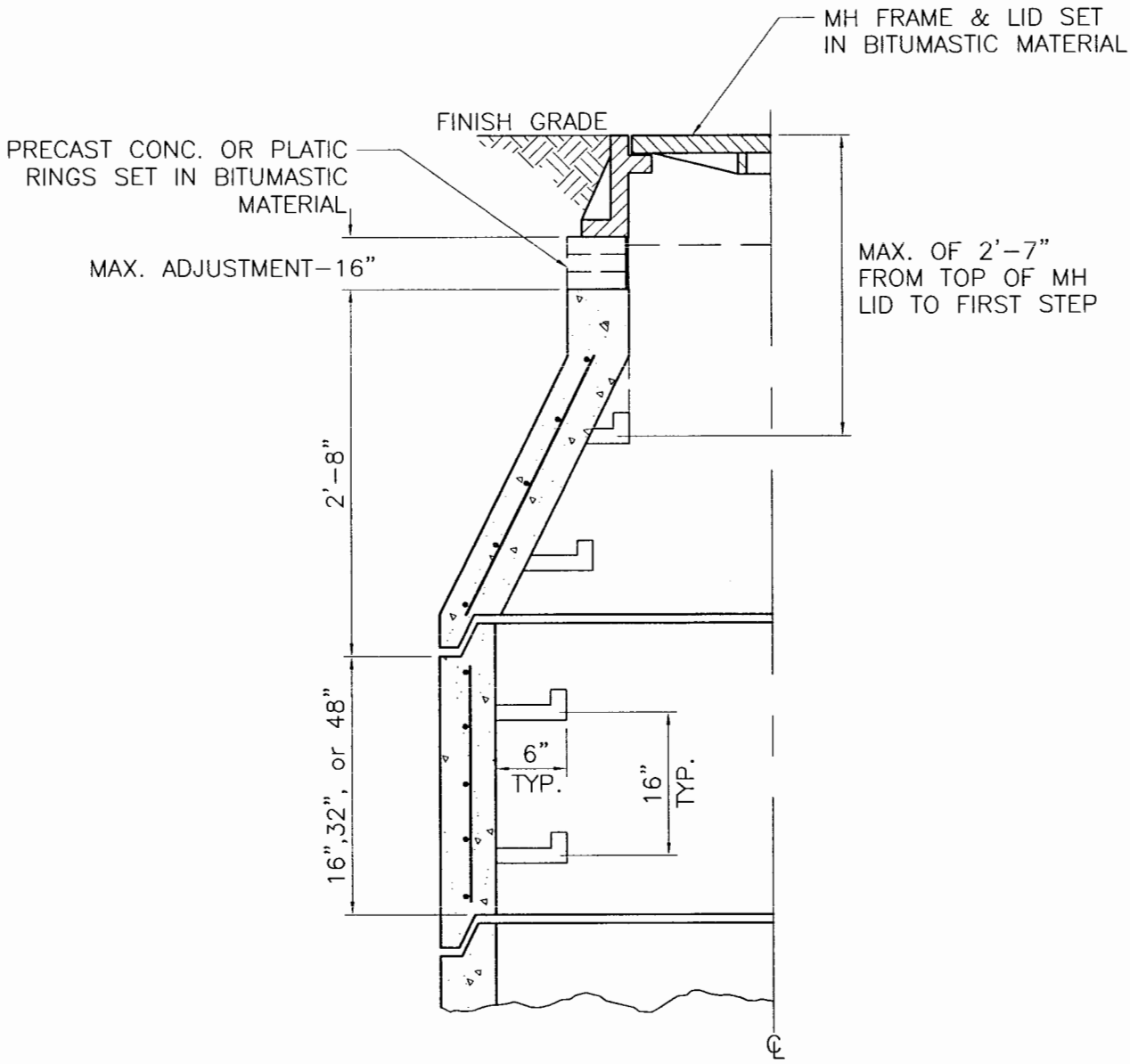

BARREL SECTION

NOTE:
IF MORE THEN 16" OF ADJUSTMENT IS NEEDED, REMOVE CONE SECTION AND ADD OR REMOVE BARREL SECTIONS AS NECESSARY.

Approved 10/01/16 Date	City of Columbia Public Works Department	MANHOLE ADJUSTMENT	6
Revisions			

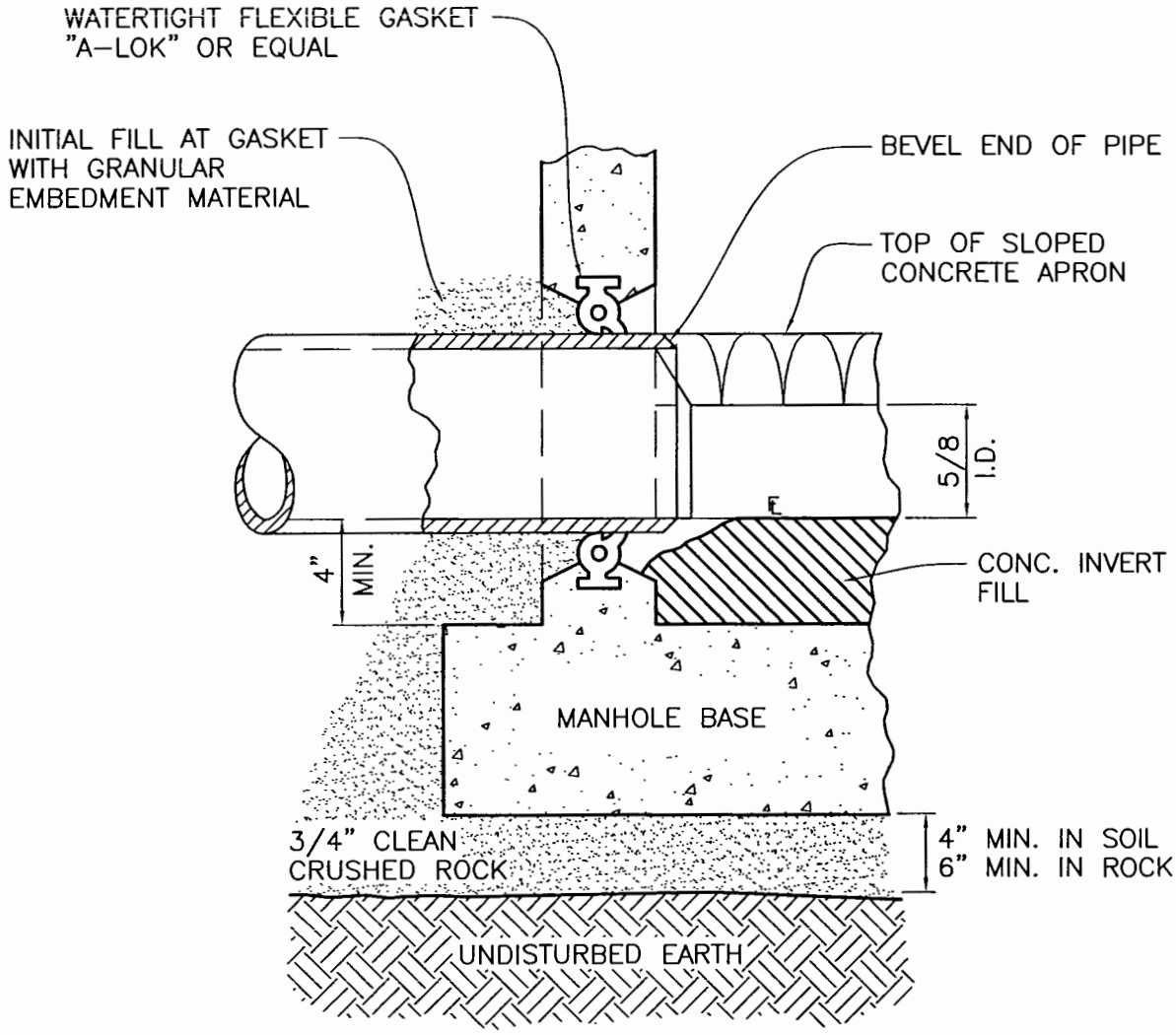

NOTE:

1. BITUMINOUS COATING ON EXTERIOR SURFACE OF MANHOLE SHALL NOT COME IN CONTACT WITH PIPE GASKET.
2. FOR CAST-IN-PLACE CONCRETE MANHOLES OR PRE-CAST WITH BOX-OUTS, THE PIPE GASKET SHALL BE A RUBBER LABYRINTH WATERSTOP WITH STAINLESS STEEL CLAMPING BANDS LOCATED AT CENTER OF WALL AND THE SPACE BETWEEN PIPE & WALL COMPLETELY GROUTED WITH NONSHRINKING MORTAR.
3. PIPE MAY PROJECT 1" MAXIMUM PAST INSIDE WALL OF MANHOLE. NO CONTACT BETWEEN PIPE & INVERT MAY OCCUR.

DHS Approved	10/01/16 Date	City of Columbia Public Works Department	MANHOLE GASKET (Pipe Gasket Detail)	7
Revisions				

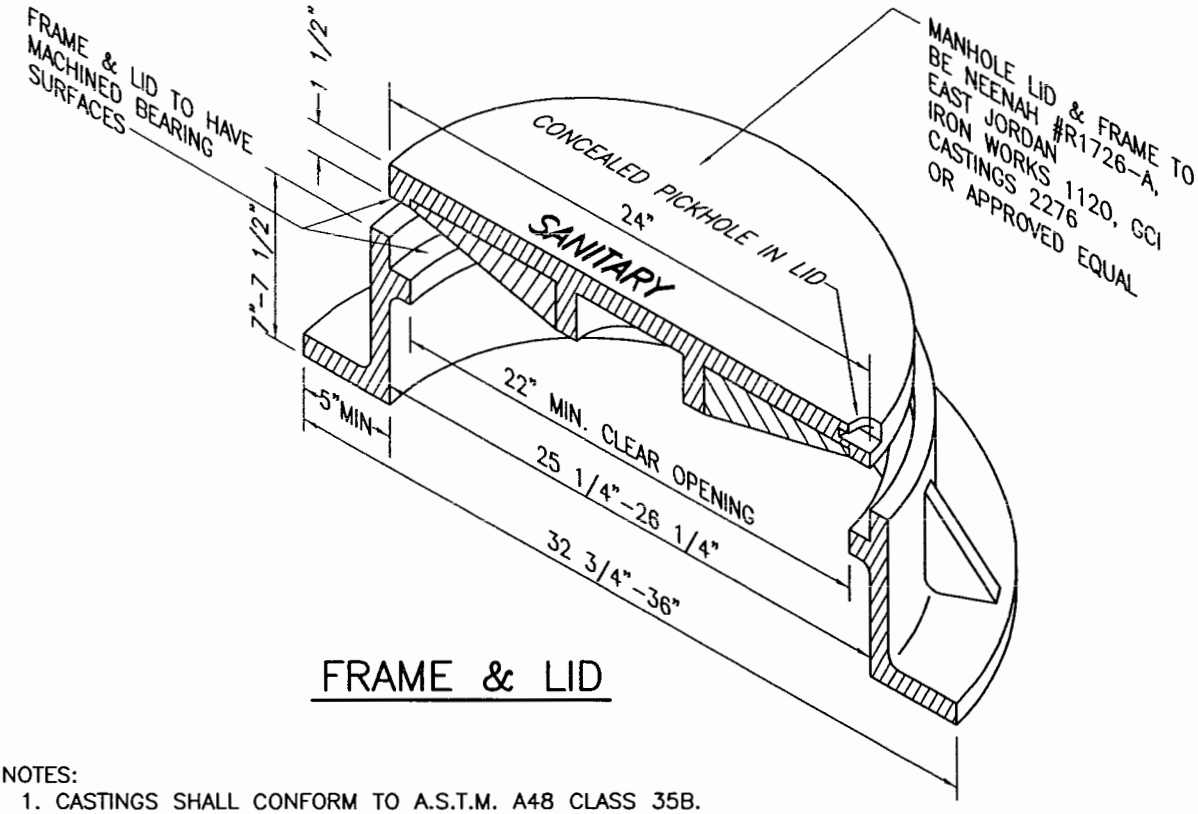

FRAME & LID

NOTES:

1. CASTINGS SHALL CONFORM TO A.S.T.M. A48 CLASS 35B.
2. ⚠ LIDWEIGHT 135 lbs. ±5%. TOTAL WEIGHT OF 350 lbs. ±5%.
3. WATERTIGHT LID AND FRAME TO BE NEENAH #R-1916-F, OR APPROVED EQUAL
4. MANHOLE STEP NEENAH R-1980-J, CLAY & BAILEY 2102-01-6200 & 2102-01-6300, GCI MS 1114B OR APPROVED EQUAL.
5. BOLT DOWN LIDS SHALL HAVE FRAMES BOLTED TO THE CONE SECTION

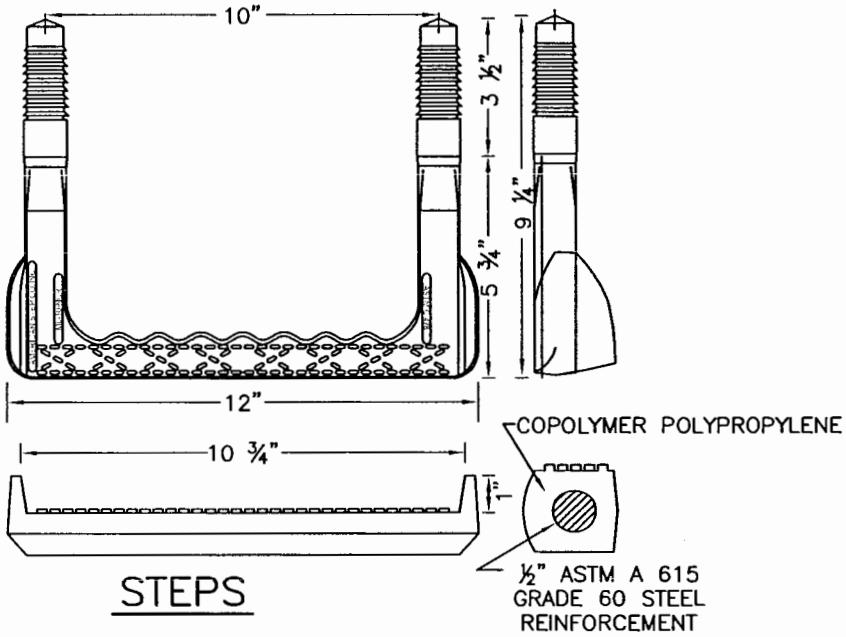

STEPS

Approved 10/01/16 Date		MANHOLE CASTINGS (Frame, Lid & Steps)	8
Revisions	City of Columbia Public Works Department		
⚠ Revised casting weight			

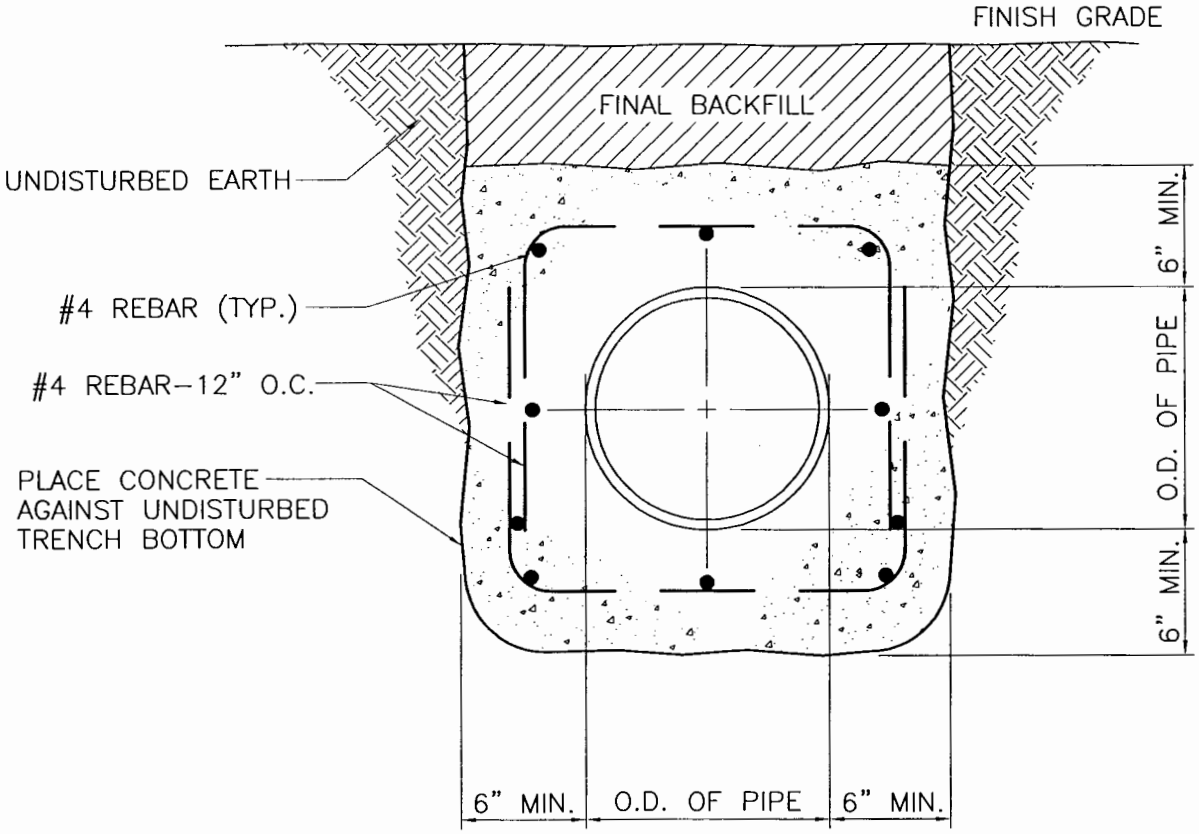

NOTES:

1. FOR PIPE LARGER THAN 12" DIAMETER THE MINIMUM CONCRETE COVER SHALL BE 8" WITH # 5 REBAR @ 12" O.C. EACH WAY.
2. BRACE OR TIE PIPE TO PREVENT FLOTATION OR DEFLECTION, DURING CONCRETE PLACEMENT.
3. VERTICAL CLEARANCE BETWEEN SEWER AND WATER MAINS SHALL BE A MINIMUM OF 2 FEET.

DHS Approved	10/01/16 Date	City of Columbia Public Works Department	PIPE ENCASEMENT (Concrete)	10
Revisions				

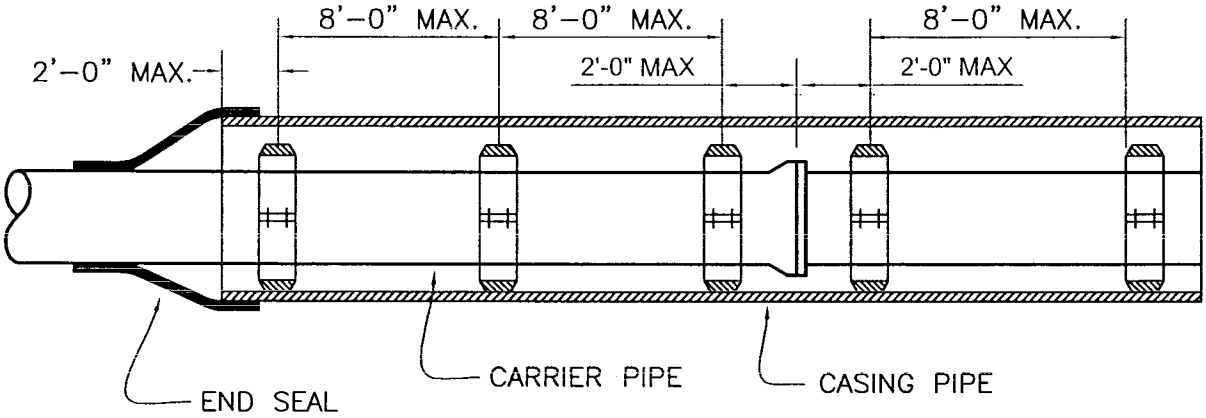

TYPE I SPACERS

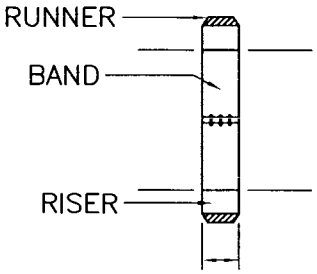

5" WIDE BAND MIN.

TYPE II SPACERS

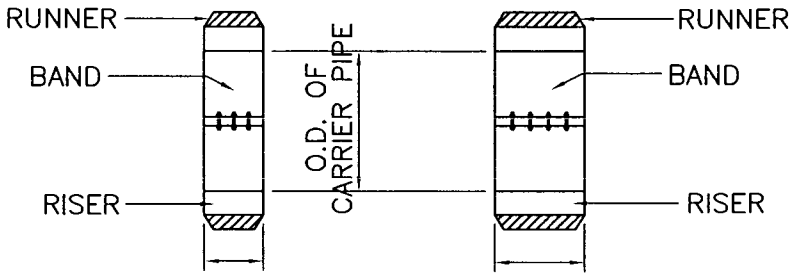

8" WIDE BAND MIN. FOR PIPE SIZES UP TO 24"

12" WIDE BAND MIN. FOR PIPES LARGER THAN 24"

SIZES 14" THRU 36"

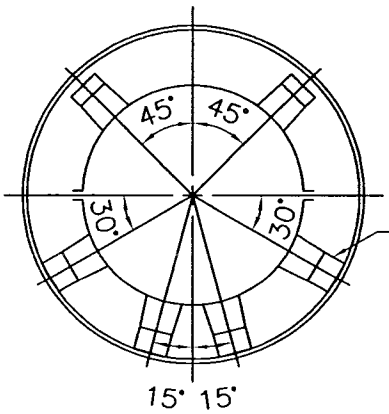

RISER

SIZES 4" THRU 12"

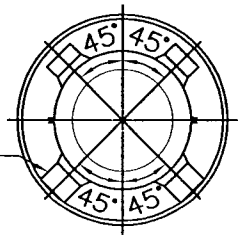

Approved 10/01/16 Date	City of Columbia Public Works Department	PIPE ENCASEMENT (Steel)	11
Revisions			

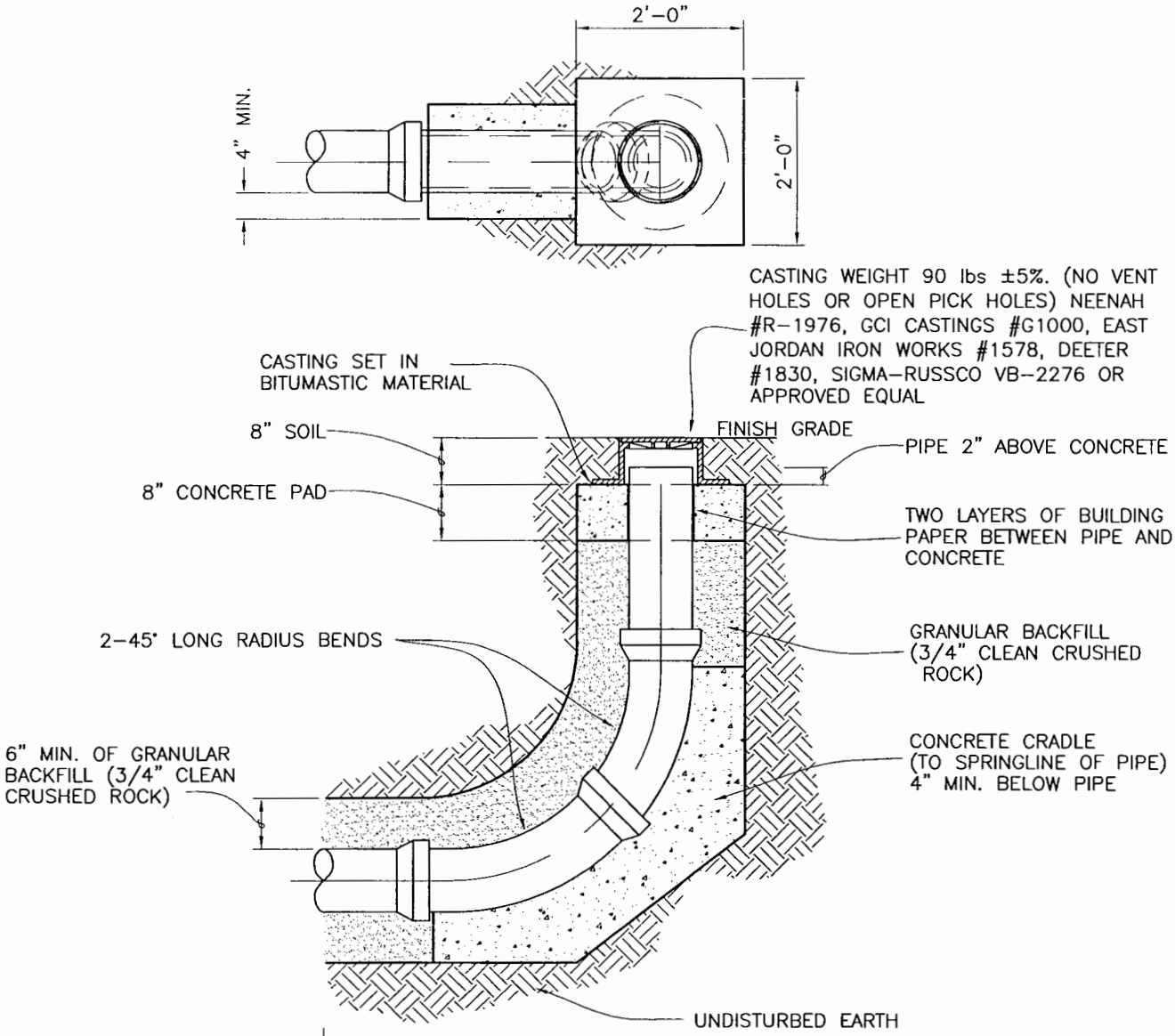

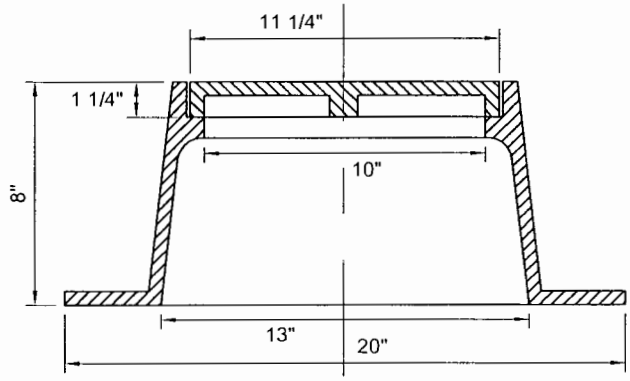

FRAME & LID

NOTE:
DISTANCE FROM CENTER OF DOWNSTREAM MANHOLE TO CENTER OF CLEANOUT SHALL BE 150 FEET OR LESS.

DAS Approved	10/01/16 Date	City of Columbia Public Works Department	STANDARD CLEANOUT	12
Revisions				

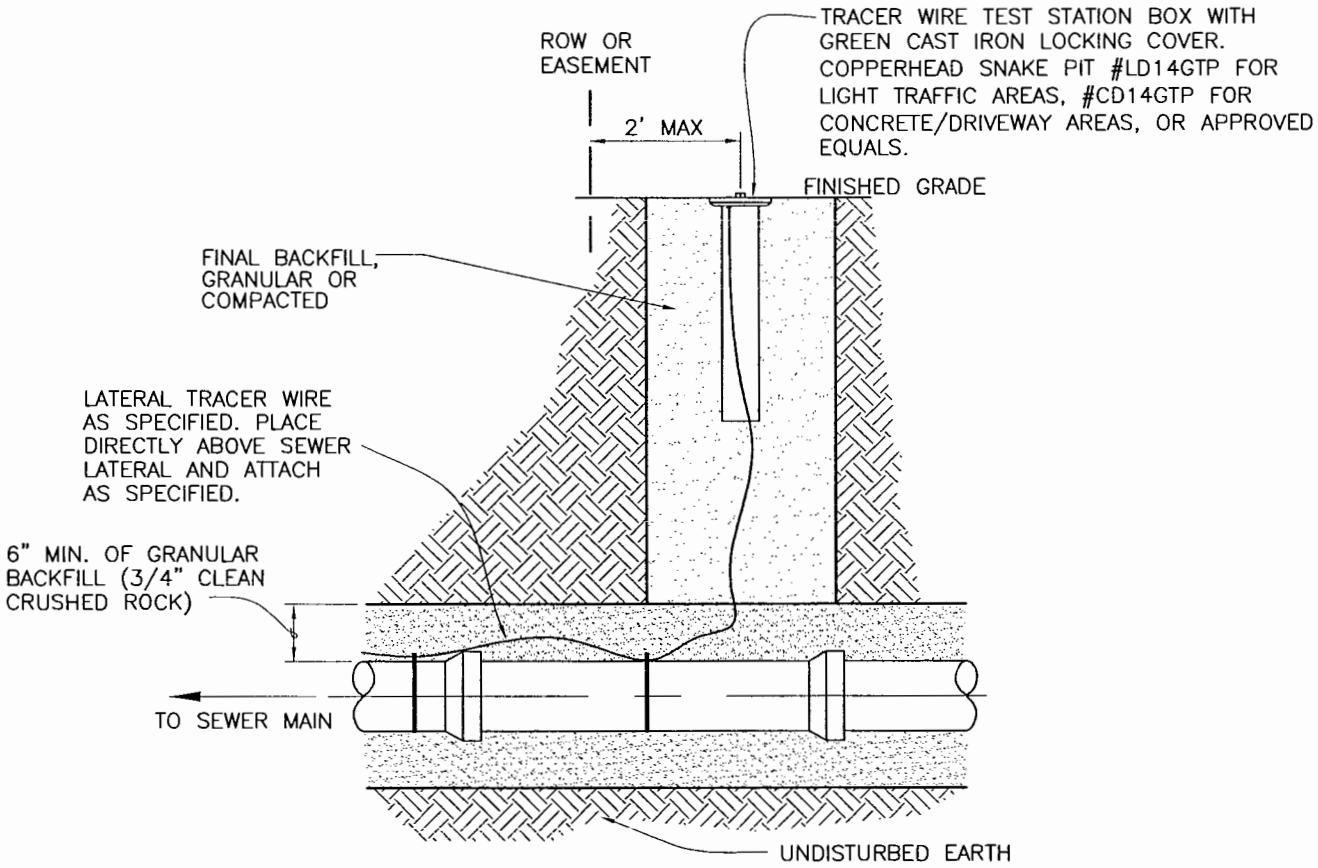

1. TRACER WIRE TEST STATIONS FOR NEW CONSTRUCTION SHALL EXTEND 1' ABOVE THE PROPOSED FINAL GRADE USING SNAKEPIT #LD14GTP–ADJ OR APPROVED EQUAL. UPON COMPLETION OF FINAL GRADING, CONTRACTOR SHALL ADJUST THE TEST STATION BOX TO MEET FINAL GRADE.

DAS 10/01/16 Approved Date	City of Columbia Public Works Department	STANDARD TRACER WIRE TEST STATION	12A
Revisions			

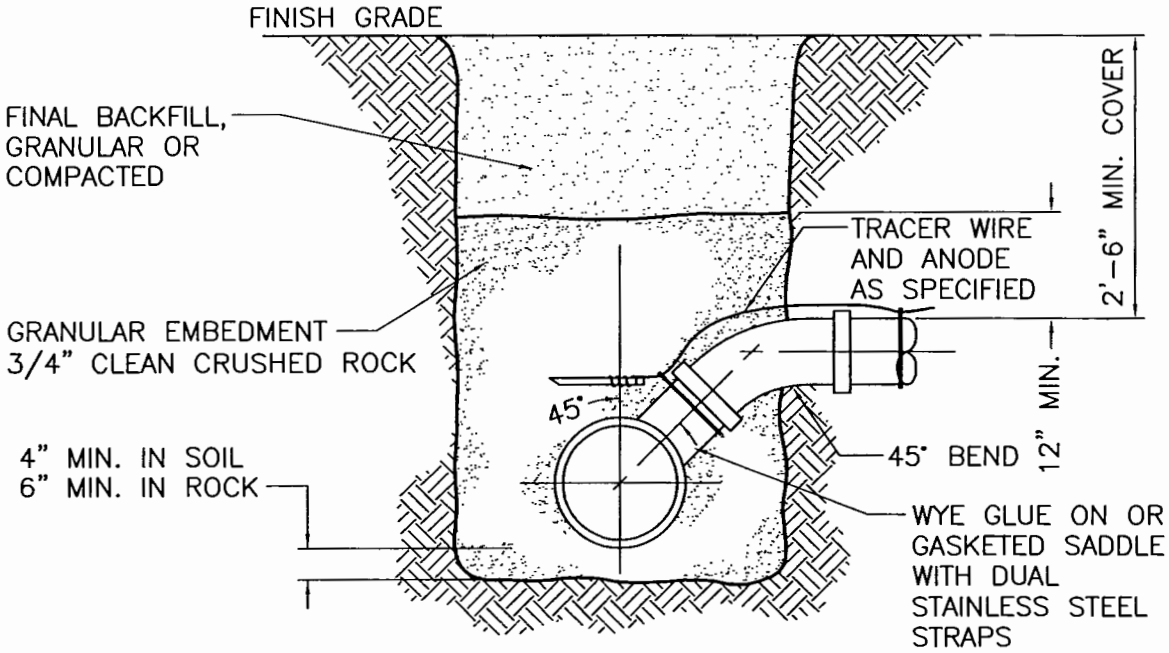

NOTES:

1. VCP PIPES SHALL NOT BE TAPPED. REPLACE SECTION OF VCP WITH PVC AND FITTING.

Approved 10/01/16 Date	City of Columbia Public Works Department	STANDARD SERVICE CONNECTION	13
Revisions			

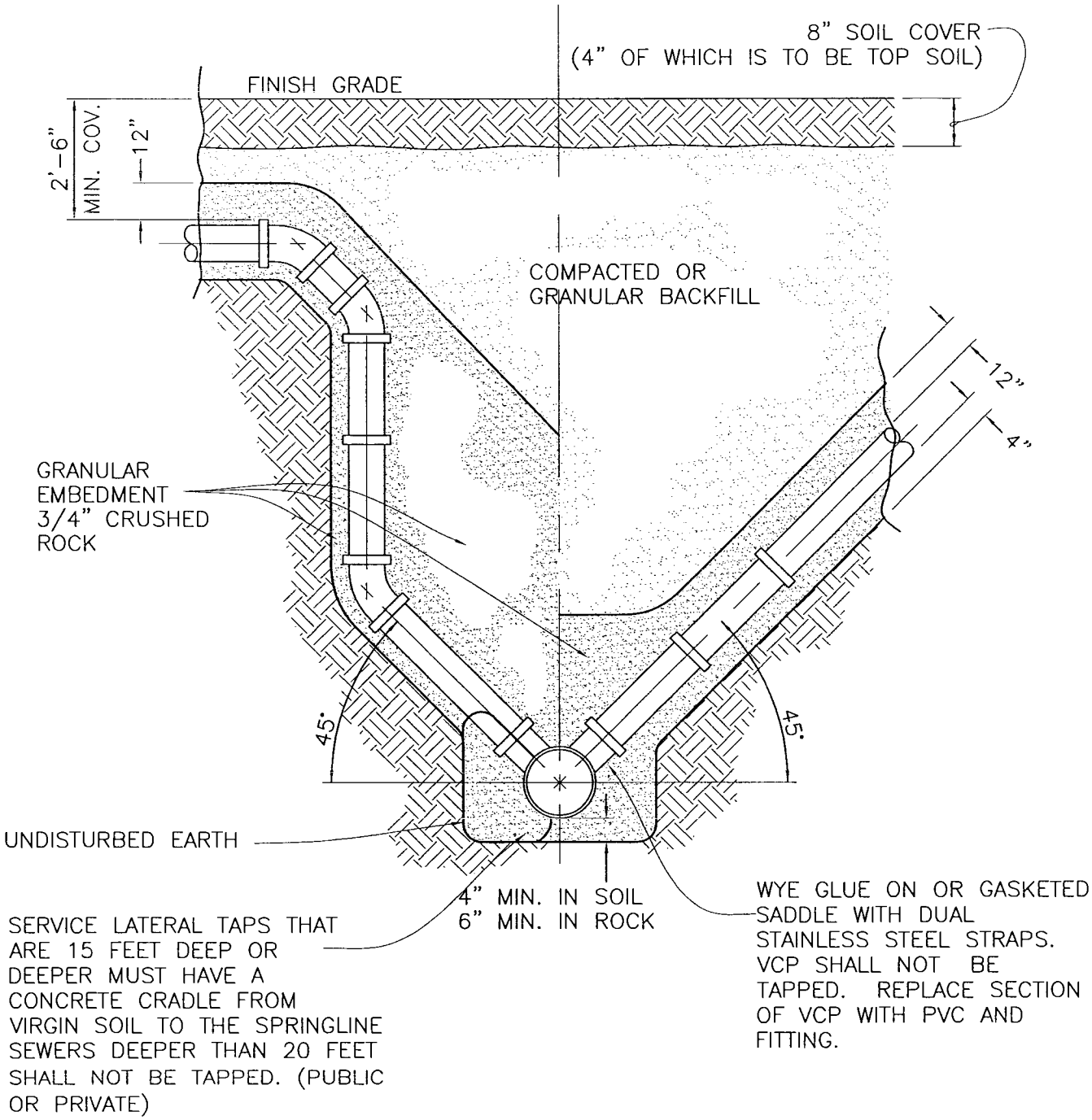

Approved 10/01/16 Date	City of Columbia Public Works Department	DEEP SERVICE CONNECTION	14
Revisions			

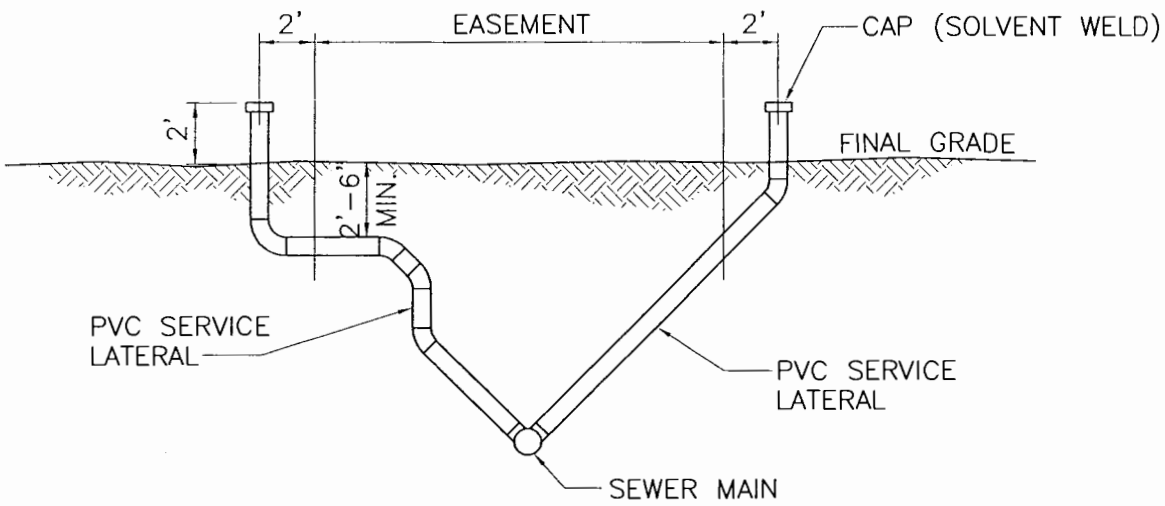

SERVICE LATERAL EXTENSION FROM DEEP SEWER

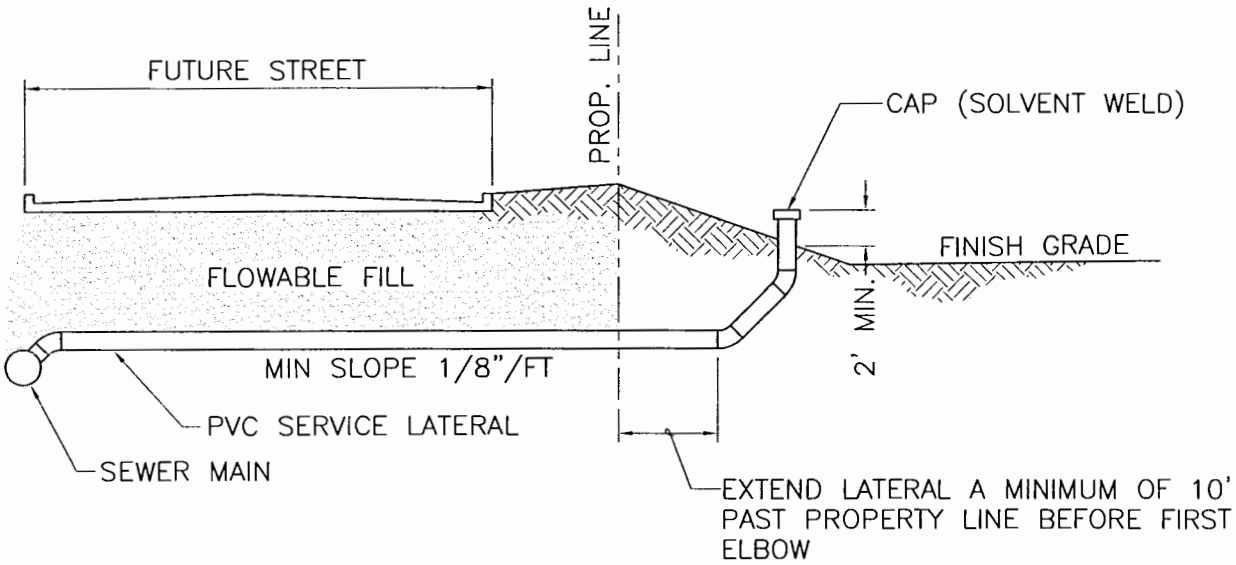

SERVICE LATERAL EXTENSION UNDER FUTURE STREETS

NOTE:
THIS DETAIL IS FOR USE WHENEVER LATERALS ARE EXTENDED FROM THE SEWER MAIN DURING NEW CONSTRUCTION. IN ALL CASES WHEN SERVICE LATERALS ARE EXTENDED THE PIPE SHALL EXTEND A MINIMUM OF TWO (2) FEET ABOVE THE PROPOSED FINAL GRADE AND SHALL BE FITTED WITH A CAP THAT IS SOLVENT WELDED IN PLACE.

Approved 10/01/16 Date Revisions	City of Columbia Public Works Department	LATERAL EXTENSION FOR NEW CONSTRUCTION	15

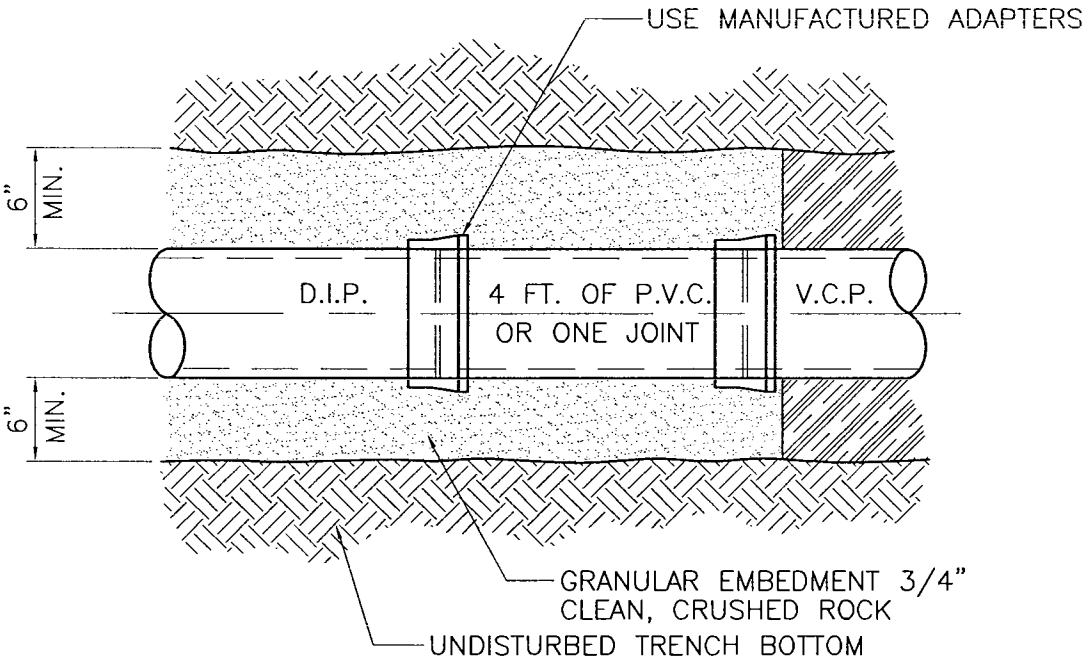

Approved 10/01/16 Date	City of Columbia Public Works Department	V.C.P. / D.I.P. CONNECTION	16
Revisions			

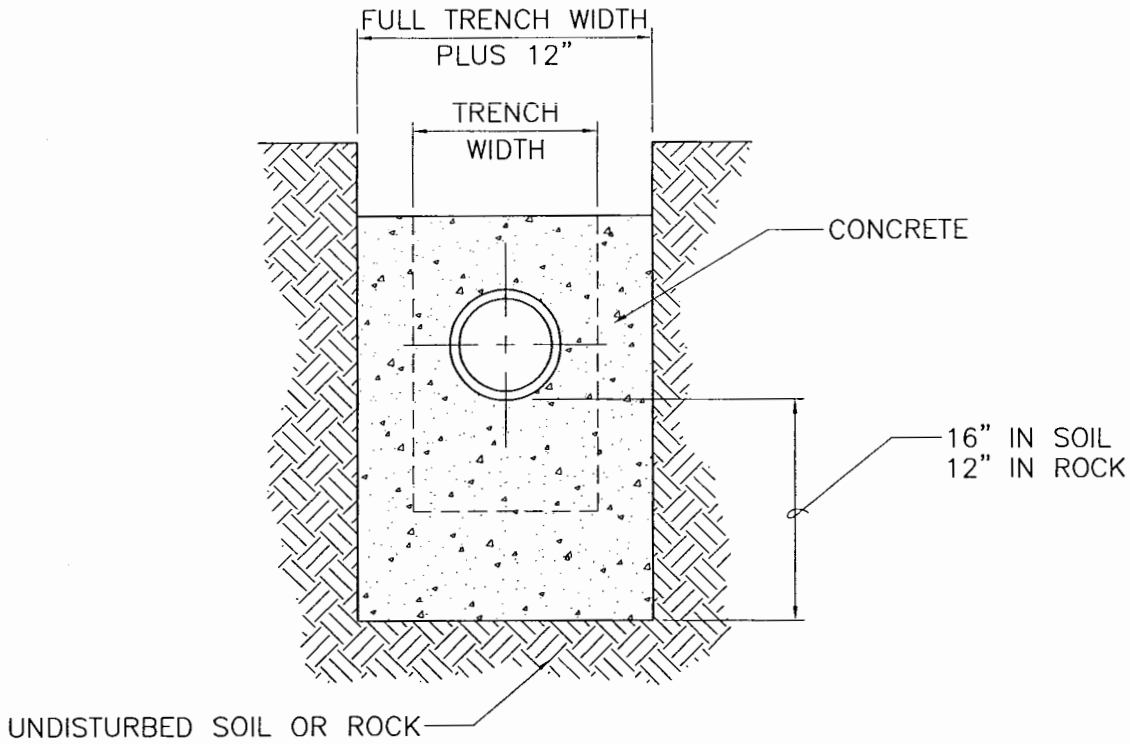

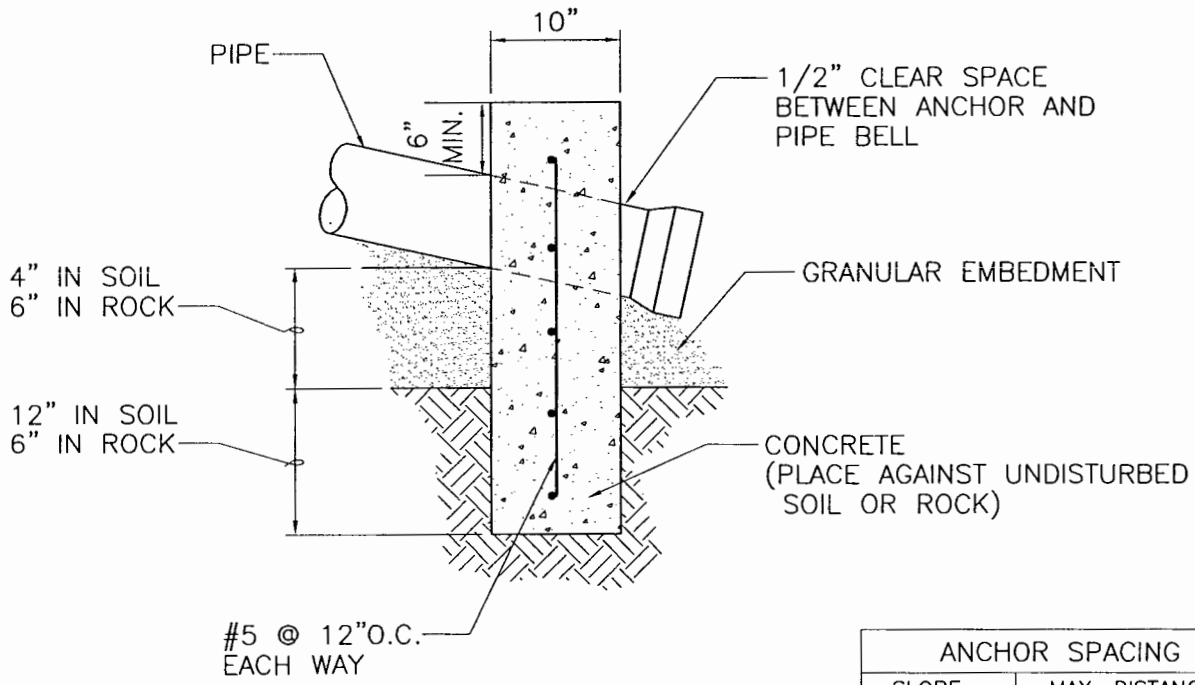

SIDE ELEVATION

ANCHOR SPACING	
SLOPE	MAX. DISTANCE
20%–35%	36'
35%–50%	24'
>50%	12' OR ONE PER JOINT OF PIPE

Approved 10/01/16 Date	City of Columbia Public Works Department	ANCHOR DETAIL	17
Revisions			

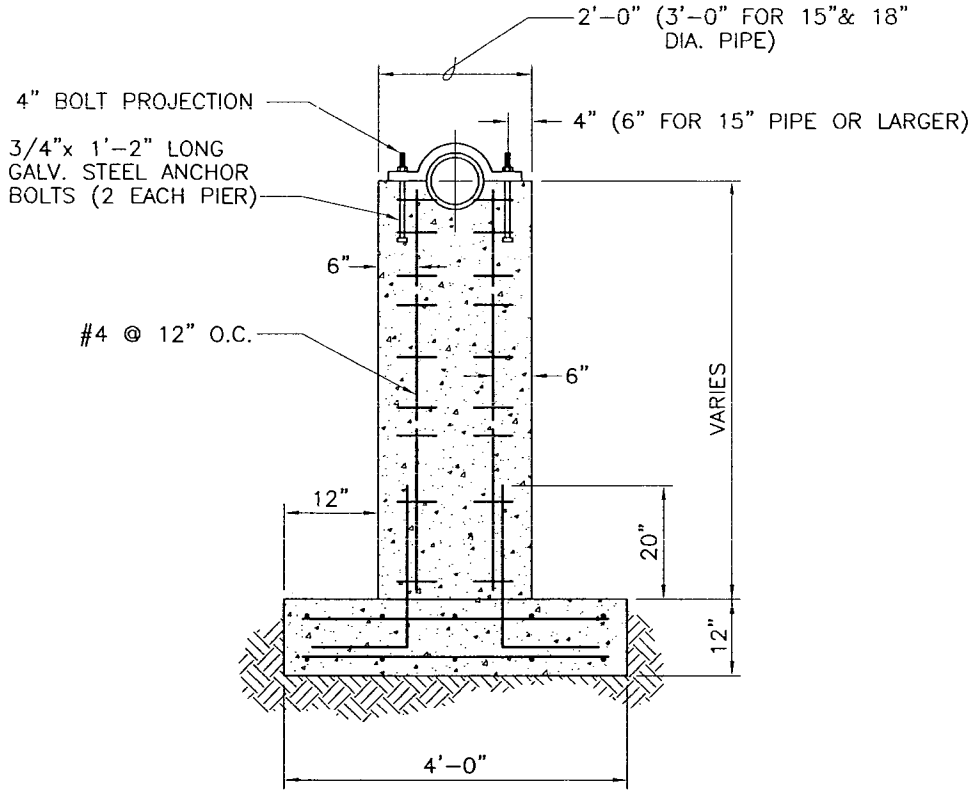

FRONT ELEVATION

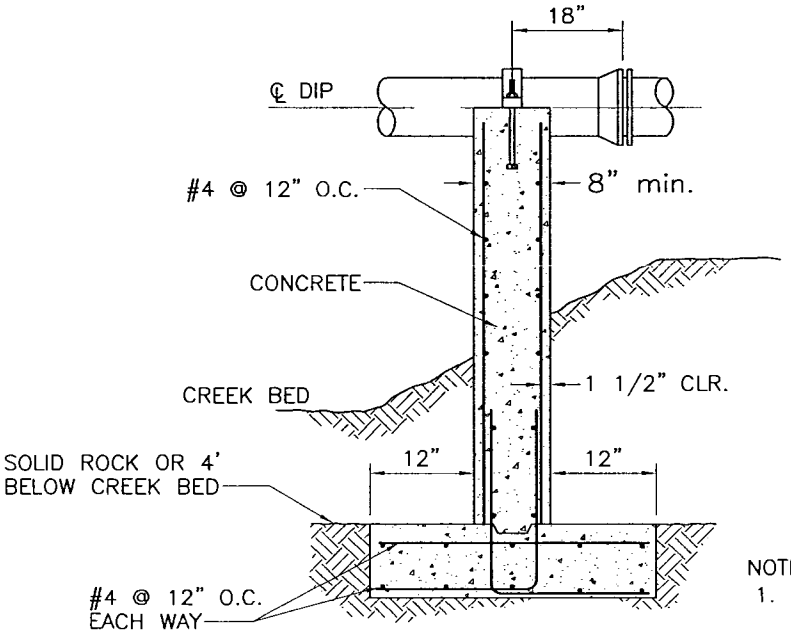

SIDE ELEVATION

NOTE:

1. PIERS SHALL BE LOCATED AS NEAR TO THE BANK AS POSSIBLE.
2. TOP OF FOOTING AT SOLID ROCK OR 4 FT. BELOW CREEK BED.

Approved 10/01/16 Date	City of Columbia Public Works Department	PIER DETAIL	18
Revisions			

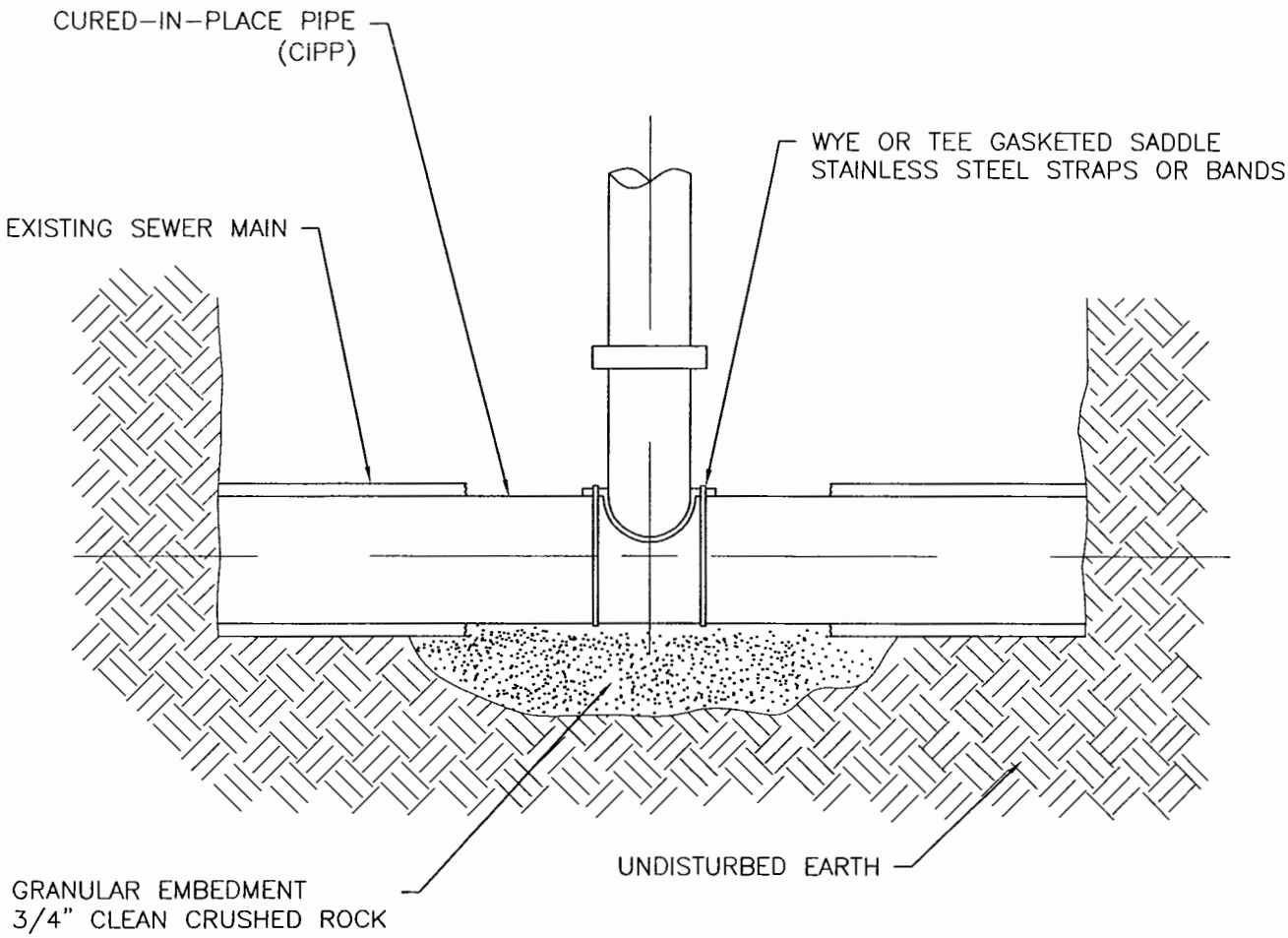

NOTES:

1. REFER TO THIS DETAIL TO CONNECT NEW SERVICE LATERALS OR TO REPLACE EXISTING LATERAL CONNECTIONS TO SEWERS LINED WITH CIPP.
2. REMOVE VCP OR OTHER HOST PIPE FROM AREA TO BE TAPPED. AREA SHALL BE SANDED TO PROVIDE A SMOOTH FLAT SURFACE FOR THE INSTALLATION OF THE SADDLE.
3. IF A NEW TAP IS INSTALLED A HOLE SHALL BE NEATLY CUT WITH AN APPROPRIATE SIZED HOLE SAW AND TAPPED AT A 45 DEGREE ANGLE PER DETAIL 13 STANDARD SERVICE CONNECTION.
4. IF REPLACING A TAP THE HOLE IN THE MAIN, REGARDLESS OF TAP POSITION, SHALL BE CLEANED AND TRIMMED TO THE APPROPRIATE SIZE. IF THE HOLE IS TOO LARGE FROM THE TAP CUTTING PROCESS THE NEXT SIZE UP TAPPING SADDLE SHALL BE USED AND REDUCED IN THE VERTICAL SECTION OF PIPE BEFORE CONNECTING TO THE EXISTING LATERAL.
5. IN ADDITION TO THE GASKETED SADDLE A FAST CURE SEALANT SUCH AS 3M 4200 OR APPROVED EQUAL SHALL BE USED.

DAS 10/01/16 Approved Date Revisions	City of Columbia Public Works Department	SERVICE LATERAL CONNECTION TO CURED-IN-PLACE PIPE (CIPP)	19

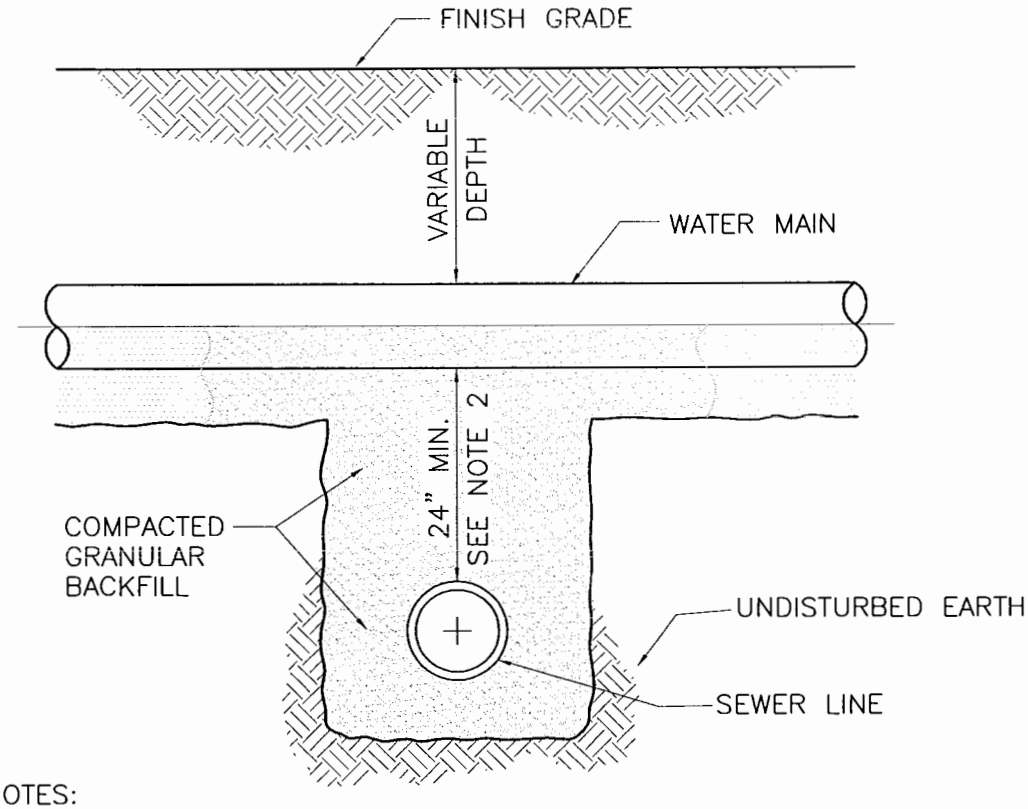

NOTES:

1. SEWERS CROSSING WATER MAINS SHALL BE LAID TO PROVIDE A VERTICAL SEPARATION THAT IS NO LESS THAN 24 INCHES BETWEEN THE OUTSIDE OF THE WATER MAIN AND THE OUTSIDE OF THE SEWER MAIN.

2. THE CROSSING SHALL BE ARRANGED SO THAT THE SEWER LINE CROSSES BELOW THE WATER LINE. CROSSINGS IN WHICH THE SEWER LINE IS ABOVE THE WATER LINE WILL ONLY BE APPROVED ON A CASE BY CASE BASIS.

3. THE CROSSING SHALL BE ARRANGED SO THAT THE ENDS OF A FULL JOINT OF PIPE WILL BE EQUIDISTANT FROM THE WATER MAIN AND AS FAR AS POSSIBLE FROM THE WATER MAIN JOINTS.

4. IF THE VERTICAL SEPARATION BETWEEN THE WATER MAIN AND SEWER MAIN IS LESS THAN 18 INCHES, THE SEWER MAIN SHALL BE D.I.P. OR PRESSURE RATED PVC PIPE WITH A PRESSURE RATING THAT IS EQUAL TO OR GREATER THAN THE WATER MAIN. THE D.I.P. OR PRESSURE RATED P.V.C. MUST BE EXTENDED A DISTANCE 10 FEET ON BOTH SIDES OF THE WATER MAIN. THE TRANSITION BETWEEN PIPE MATERIALS SHALL BE ACCOMPLISHED WITH A RESTRAINED MECHANICAL TYPE JOINT OR FITTING. FLEXIBLE TYPE (FERNCO) FITTINGS ARE NOT ACCEPTABLE.

5. PRESSURE SEWER LINE AND WATER LINE CROSSINGS SHALL BE REVIEWED ON A CASE BY CASE BASIS.

Approved 10/01/16 Date Revisions	City of Columbia Public Works Department	GRAVITY SEWER AND WATER LINE CROSSING	20

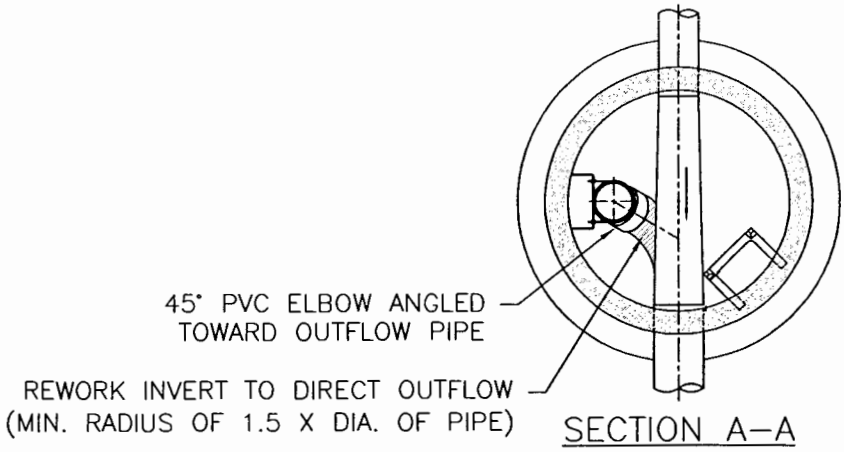

NOTES:

1. INSIDE DROP CONNECTION ONLY ALLOWED WITH PUBLIC WORKS DEPT. APPROVAL, WHEN PW DEPT. DEEMS UNFEASIBLE, UNPRACTICAL OR DANGEROUS TO PROVIDE OUTSIDE DROP.

2. DROP INLET PIPE TO BE SAME SIZE AND MATERIAL AS SEWER LINE.

3. ALIGNMENT OF TEE: DROP INLET PIPE MAY BE ADJUSTED TO A MAXIMUM OF 5% DEFLECTION.

4. ANNULAR SPACE AROUND NEW PIPE TO BE SEALED WITH NON–SHRINK GROUT, LINK SEAL, OR WATERTIGHT AND FLEXIBLE GASKET.

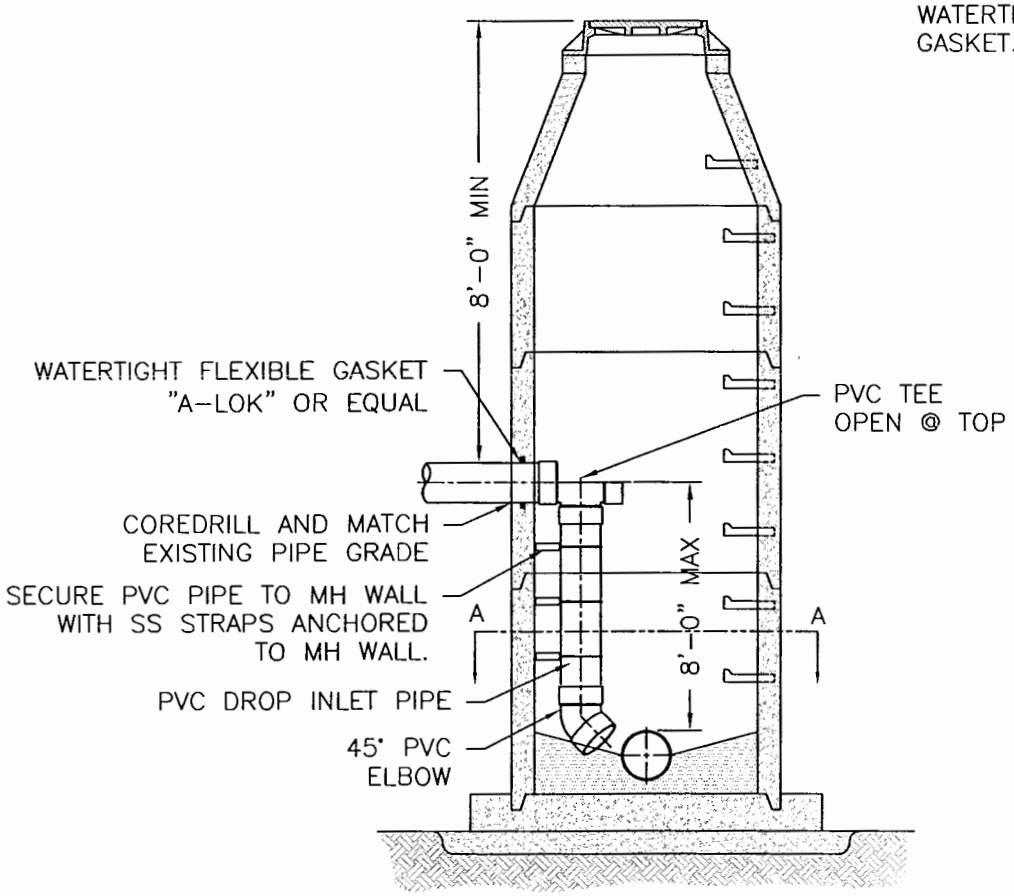

Approved 10/01/16 Date	City of Columbia Public Works Department	INSIDE DROP MANHOLE CONNECTION	21
Revisions			

NOTE:
1. EXISTING MAIN SEGMENT REPLACEMENT AT DISCRETION OF ENGINEER

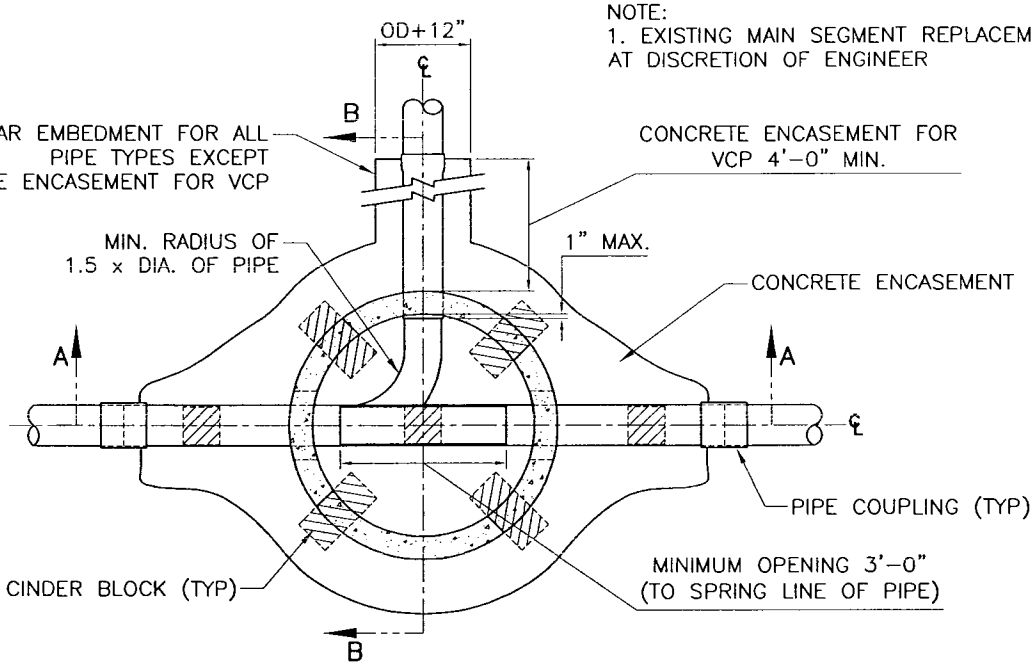

HORIZONTAL SECTION

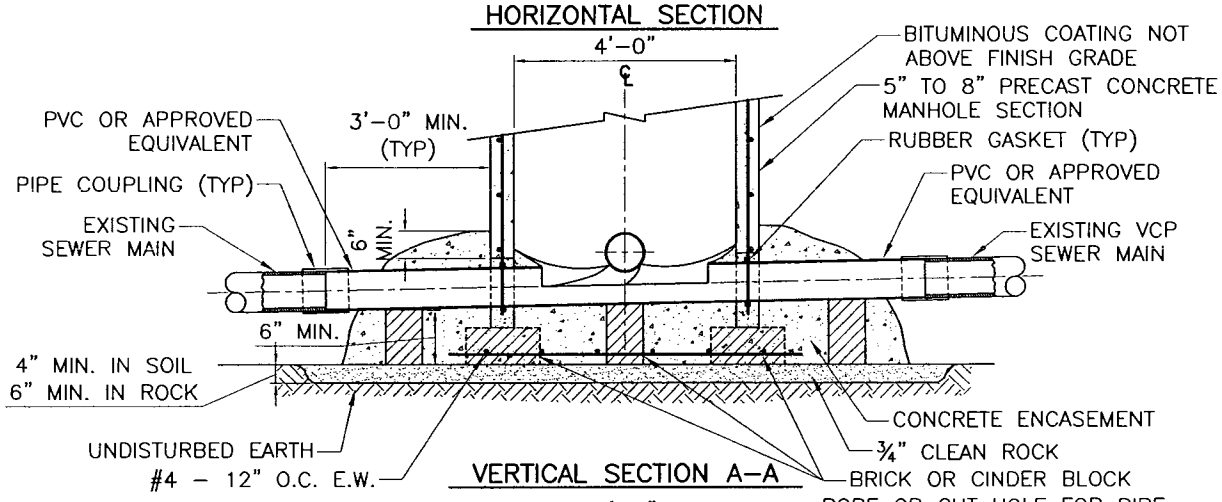

VERTICAL SECTION A-A

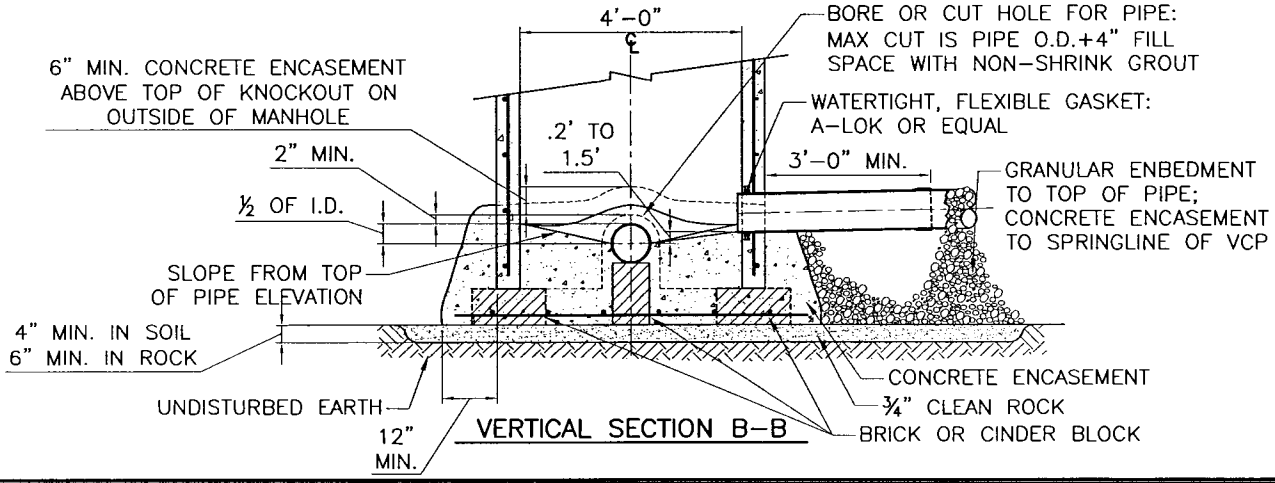

VERTICAL SECTION B-B

Approved 10/01/16 Date	City of Columbia Public Works Department	DOGHOUSE MANHOLE	22
Revisions			

EXHIBIT D

CONTRACTOR'S PERFORMANCE BOND

Bond Number: 2121607

Exhibit D

PERFORMANCE BOND

KNOW ALL MEN BY THESE PRESENTS, that we, HUB Parking Technology USA, Inc.
761 Commonwealth Drive, Warrendale, PA 15086
as Principal, hereinafter called Contractor, and City of Columbia, Missouri
701 East Broadway, 5th Floor, Columbia, MO 65201
a corporation organized under the laws of the State of Ohio,
and authorized to transact business in the State of Missouri as Surety, hereinafter called Surety, are held and firmly bound unto the City of Columbia, Missouri, as Obligee, hereinafter called Owner, in the amount of $917,544.33), DOLLARS, for the payment whereof Contractor and Surety bind themselves, their heirs, executors, administrators, successors, and assigns, jointly and severally, firmly by these presents:

WHEREAS, Contractor has by written agreement dated _____, entered into Contract with Owner for: _____, in accordance with specifications prepared by the City of Columbia, which Contract is by reference made a part hereof, and is hereinafter referred to as the Contract.

NOW, THEREFORE, THE CONDITION OF THIS OBLIGATION is such that, if Contractor shall promptly and faithfully perform said Contract, then this obligation shall be null and void; otherwise it shall remain in full force and effect.

The Surety hereby waives notice of any alteration or extension of time made by the Owner.

Whenever Contractor shall be, and declared by Owner to be, in default under the Contract, the Owner having performed Owner's obligations thereunder, the Surety may promptly remedy the default, or shall promptly:

1. Complete the Contract in accordance with its terms and conditions, or

2. Obtain a bid for submission to Owner for completing the Contract in accordance with its terms and conditions and upon determination by Owner and Surety of the lowest responsible Bidder, arrange for a Contract between such Bidder and Owner, and make available as work progresses (even though there should be a default or a succession of defaults under the Contract or Contracts of completion arranged under this paragraph) sufficient funds to pay the cost of completion less the balance of the Contract price, but not exceeding, including other costs and damages for which the Surety may be liable hereunder, the amount set forth in the first paragraph hereof. The term "balance of the Contract price", as used in this paragraph, shall mean the total amount payable by Owner to Contractor under the Contract and any amendments thereto, less the amount properly paid by Owner to Contractor.

Any suit under this bond must be instituted before the expiration of two (2) years from the date on which final payment under the Contract falls due.

No right of action shall accrue on this bond to or for the use of any person or corporation other than the Owner named herein or the heirs, executors, administrators or successors of Owner.

IN TESTIMONY WHEREOF, the Contractor has hereunto set its hand and the Surety has caused these presents to be executed in its name, and its Corporate Seal to be affixed by its Attorney-in-Fact at Pittsburgh, PA, on this 31st day of July, 2017.

HUB Parking Technology USA, Inc.
Contractor

(SEAL)

By: _____

Great American Insurance Company
Surety Company

(SEAL)

By: _____
James C. Carlins, Attorney-in-Fact

By: _____
Richard J. Taylor Missouri Representative

(Accompany this bond with Attorney-in-Fact's authority from the Surety Company certified to include the date of this bond).

EXHIBIT E

CONTRACTOR'S LABOR AND MATERIAL PAYMENT BOND

Bond Number: 2121607

Exhibit E

LABOR & MATERIAL PAYMENT BOND

KNOW ALL MEN BY THESE PRESENTS, that we, HUB Parking Technology USA, Inc. as Principal, hereinafter called Contractor, and Great American Insurance Co. a corporation organized under the laws of the State of Ohio, and authorized to transact business in the State of Missouri, as Surety, hereinafter called Surety, are held and firmly bound unto the City of Columbia, Missouri, as Obligee, hereinafter called Owner, for the use and benefit of claimants as herein below defined, in the amount of $917,544.33 for the payment whereof Contractor and Surety bind themselves, their heirs, executors, administrators, successors and assigns, jointly and severally, firmly by these presents:

WHEREAS, Contractor has by written agreement dated _____ entered into a Contract with Owner for: _____ in accordance with drawings and specifications prepared by the City of Columbia, which Contract is by reference made a part hereof, and is hereinafter referred to as the Contract.

NOW, THEREFORE, THE CONDITION OF THE OBLIGATION is such that if the Contractor shall promptly make payment to all claimants as hereinafter defined, for all labor and material used or reasonably required for use in the performance of the Contract, then this obligation shall be void; otherwise, it shall remain in full force and effect, subject, however, to the following conditions:

1. A claimant is defined as one having a direct Contract with the Contractor or with a subcontractor of the Contractor for labor, material, or both used or reasonably required for use in the performance of the Contract; labor and material being construed to include the part of water, gas, power, light, heat, oil, gasoline, telephone service, or rental of equipment directly applicable to the Contract.

2. The above named Contractor and Surety hereby jointly and severally agree with the Owner that every claimant as herein defined, who has not been paid in full before the expiration of a period of ninety (90) days after the date on which the last of such claimant's work or labor was done or performed, or materials were furnished by such claimant, may sue on this bond for the use of such claimant, prosecute the suit to final judgment for such sum or sums as may be justly due claimant, and have execution thereon. The Owner shall not be liable for the payment of any costs or expenses of any such suit.

3. No suit or action shall be commenced hereunder by any claimant:

i Unless claimant, other than one having a direct Contract with the Contractor, shall have given written notice to any two of the following: the Contractor, the Owner, or the Surety above named, within ninety (90) days after such claimant did or performed the last of the work or labor, or furnished the last of the materials for which said claim is made, stating with substantial accuracy the amount claimed and the name of the party to whom the materials were furnished, or for whom the work or labor was done or performed. Such notice shall be served by mailing the same by

registered mail or certified mail, postage prepaid, in an envelope addressed to the Contractor, Owner, or Surety, at any place where an office is regularly maintained for the transaction of business, or served in any manner in which legal process may be served in the state in which the aforesaid project is located, save that such services need not be made by a public officer.

ii. After the expiration of one (1) year following the date on which Contractor ceased work on said Contract, it being understood, however, that if any limitation embodied in this bond is prohibited by any law controlling the construction hereof, such limitation shall be deemed to be amended so as to be equal to the minimum period of limitation permitted by such law.

Iii Other than in a state court of competent jurisdiction in and for the county or other political subdivision of the state in which the project or any part thereof is situated or in the United States District Court for the district in which the project or any part thereof is situated, and not elsewhere.

4. The amount of this bond shall be reduced by and to the extent of any payment or payments made in good faith hereunder, inclusive of the payment by Surety of Mechanic's Liens which may be filed on record against said improvement, whether or not claim for the amount of such lien be presented under or against this bond.

IN TESTIMONY WHEREOF, the Contractor has hereunto set their hand and the Surety caused these presents to be executed in its name and its corporate seal to be affixed by its Attorney-in-Fact at

Pittsburgh, PA, on this 31st day of July, 20 17.

CONTRACTOR: HUB Parking Technology USA, Inc. (Seal)

BY: _____

SURETY COMPANY: Great American Insurance Company

BY: _____ (Seal)

James C. Carlins, (Attorney-in-Fact)

BY: _____

Richard J. Taylor, (Missouri Representative)

(Accompany this bond with Attorney-in-Fact's authority from the Surety Company certified to include the date of this bond)

GREAT AMERICAN INSURANCE COMPANY®

Administrative Office: 301 E 4TH STREET • CINCINNATI, OHIO 45202 • 513-369-5000 • FAX 513-723-2740

The number of persons authorized by
this power of attorney is not more than FOUR

No. 0 18477

POWER OF ATTORNEY

KNOW ALL MEN BY THESE PRESENTS: That the GREAT AMERICAN INSURANCE COMPANY, a corporation organized and existing under and by virtue of the laws of the State of Ohio, does hereby nominate, constitute and appoint the person or persons named below, each individually if more than one is named, its true and lawful attorney-in-fact, for it and in its name, place and stead to execute on behalf of the said Company, as surety, any and all bonds, undertakings and contracts of suretyship, or other written obligations in the nature thereof; provided that the liability of the said Company on any such bond, undertaking or contract of suretyship executed under this authority shall not exceed the limit stated below.

Name	Address	Limit of Power
JAMES C. CARLINS	ALL OF	ALL
ANTHONY P. LEKSE	PITTSBURGH, PENNSYLVANIA	$75,000,000
RICHARD J. TAYLOR		
CHRISTOPHER J. RUCK		

This Power of Attorney revokes all previous powers issued on behalf of the attorney(s)-in-fact named above.

IN WITNESS WHEREOF the GREAT AMERICAN INSURANCE COMPANY has caused these presents to be signed and attested by its appropriate officers and its corporate seal hereunto affixed this 21ST day of JULY, 2011.

Attest GREAT AMERICAN INSURANCE COMPANY

Assistant Secretary

Divisional Senior Vice President

DAVID C. KITCHIN (877-377-2405)

STATE OF OHIO, COUNTY OF HAMILTON - ss:

On this 21ST day of JULY, 2011, before me personally appeared DAVID C. KITCHIN, to me known, being duly sworn, deposes and says that he resides in Cincinnati, Ohio, that he is a Divisional Senior Vice President of the Bond Division of Great American Insurance Company, the Company described in and which executed the above instrument; that he knows the seal of the said Company; that the seal affixed to the said instrument is such corporate seal; that it was so affixed by authority of his office under the By-Laws of said Company, and that he signed his name thereto by like authority.

KAREN L. GROSHEIM
NOTARY PUBLIC, STATE OF OHIO
MY COMMISSION EXPIRES 02-20-16

This Power of Attorney is granted by authority of the following resolutions adopted by the Board of Directors of Great American Insurance Company by unanimous written consent dated June 9, 2008.

RESOLVED: That the Divisional President, the several Divisional Senior Vice Presidents, Divisional Vice Presidents and Divisonal Assistant Vice Presidents, or any one of them, be and hereby is authorized, from time to time, to appoint one or more Attorneys-in-Fact to execute on behalf of the Company, as surety, any and all bonds, undertakings and contracts of suretyship, or other written obligations in the nature thereof; to prescribe their respective duties and the respective limits of their authority; and to revoke any such appointment at any time.

RESOLVED FURTHER: That the Company seal and the signature of any of the aforesaid officers and any Secretary or Assistant Secretary of the Company may be affixed by facsimile to any power of attorney or certificate of either given for the execution of any bond, undertaking, contract of suretyship, or other written obligation in the nature thereof, such signature and seal when so used being hereby adopted by the Company as the original signature of such officer and the original seal of the Company, to be valid and binding upon the Company with the same force and effect as though manually affixed.

CERTIFICATION

I, STEPHEN C. BERAHA, Assistant Secretary of Great American Insurance Company, do hereby certify that the foregoing Power of Attorney and the Resolutions of the Board of Directors of June 9, 2008 have not been revoked and are now in full force and effect.

Signed and sealed this 31st day of July 2017.

Assistant Secretary

S1029AC (4/11)

EXHIBIT F

CONTRACTOR'S INSURANCE CERTIFICATE

ACORD®

CERTIFICATE OF LIABILITY INSURANCE

DATE (MM/DD/YYYY): 7/19/2017

THIS CERTIFICATE IS ISSUED AS A MATTER OF INFORMATION ONLY AND CONFERS NO RIGHTS UPON THE CERTIFICATE HOLDER. THIS CERTIFICATE DOES NOT AFFIRMATIVELY OR NEGATIVELY AMEND, EXTEND OR ALTER THE COVERAGE AFFORDED BY THE POLICIES BELOW. THIS CERTIFICATE OF INSURANCE DOES NOT CONSTITUTE A CONTRACT BETWEEN THE ISSUING INSURER(S), AUTHORIZED REPRESENTATIVE OR PRODUCER, AND THE CERTIFICATE HOLDER.

IMPORTANT: If the certificate holder is an ADDITIONAL INSURED, the policy(ies) must have ADDITIONAL INSURED provisions or be endorsed. If SUBROGATION IS WAIVED, subject to the terms and conditions of the policy, certain policies may require an endorsement. A statement on this certificate does not confer rights to the certificate holder in lieu of such endorsement(s).

PRODUCER
Beecher Carlson Insurance Services
6 Concourse Parkway, Suite 2300
Atlanta, GA 30328

www.beechercarlson.com

CONTACT NAME: Beecher Carlson Insurance Services
PHONE (A/C, No, Ext): 6785394800 FAX (A/C, No): 7708703031
E-MAIL ADDRESS:

INSURER(S) AFFORDING COVERAGE	NAIC #
INSURER A: Zurich American Insurance Company	16535
INSURER B: Great Northern Insurance Company	20303
INSURER C: Federal Insurance Company	20281
INSURER D: Pacific Indemnity Insurance Company	18380
INSURER E:	
INSURER F:	

INSURED
HUB Parking Technology USA, Inc
761 Commonwealth Drive, Suite 204
Warrendale PA 15086

COVERAGES **CERTIFICATE NUMBER:** 36756103 **REVISION NUMBER:**

THIS IS TO CERTIFY THAT THE POLICIES OF INSURANCE LISTED BELOW HAVE BEEN ISSUED TO THE INSURED NAMED ABOVE FOR THE POLICY PERIOD INDICATED. NOTWITHSTANDING ANY REQUIREMENT, TERM OR CONDITION OF ANY CONTRACT OR OTHER DOCUMENT WITH RESPECT TO WHICH THIS CERTIFICATE MAY BE ISSUED OR MAY PERTAIN, THE INSURANCE AFFORDED BY THE POLICIES DESCRIBED HEREIN IS SUBJECT TO ALL THE TERMS, EXCLUSIONS AND CONDITIONS OF SUCH POLICIES. LIMITS SHOWN MAY HAVE BEEN REDUCED BY PAID CLAIMS.

INSR LTR	TYPE OF INSURANCE	ADDL INSD	SUBR WVD	POLICY NUMBER	POLICY EFF (MM/DD/YYYY)	POLICY EXP (MM/DD/YYYY)	LIMITS		
A	✓ COMMERCIAL GENERAL LIABILITY ☐ CLAIMS-MADE ✓ OCCUR GEN'L AGGREGATE LIMIT APPLIES PER: ✓ POLICY ☐ PRO-JECT ☐ LOC OTHER:			GLO 0144238-01	1/1/2017	1/1/2018	EACH OCCURRENCE	$	1,000,000
							DAMAGE TO RENTED PREMISES (Ea occurrence)	$	100,000
							MED EXP (Any one person)	$	5,000
							PERSONAL & ADV INJURY	$	1,000,000
							GENERAL AGGREGATE	$	1,000,000
							PRODUCTS - COMP/OP AGG	$	1,000,000
								$	
B	AUTOMOBILE LIABILITY ✓ ANY AUTO ☐ OWNED AUTOS ONLY ☐ SCHEDULED AUTOS ☐ HIRED AUTOS ONLY ☐ NON-OWNED AUTOS ONLY			73569271	1/1/2017	1/1/2018	COMBINED SINGLE LIMIT (Ea accident)	$	1,000,000
							BODILY INJURY (Per person)	$	
							BODILY INJURY (Per accident)	$	
							PROPERTY DAMAGE (Per accident)	$	
								$	
C	☐ UMBRELLA LIAB ✓ OCCUR ✓ EXCESS LIAB ☐ CLAIMS-MADE ☐ DED ☐ RETENTION $			79880167 (Auto & EL)	1/1/2017	1/1/2018	EACH OCCURRENCE	$	5,000,000
							AGGREGATE	$	5,000,000
								$	
D	WORKERS COMPENSATION AND EMPLOYERS' LIABILITY ANYPROPRIETOR/PARTNER/EXECUTIVE OFFICER/MEMBEREXCLUDED? Y / N ☐ (Mandatory in NH) If yes, describe under DESCRIPTION OF OPERATIONS below	N / A		71743134	1/1/2017	1/1/2018	✓ PER STATUTE ☐ OTH-ER		
							E.L. EACH ACCIDENT	$	1,000,000
							E.L. DISEASE - EA EMPLOYEE	$	1,000,000
							E.L. DISEASE - POLICY LIMIT	$	1,000,000
A	Excess General Liability			AUC 0144253-01	1/1/2017	1/1/2018	$2,000,000 Each Occurence/Aggregate		

DESCRIPTION OF OPERATIONS / LOCATIONS / VEHICLES (ACORD 101, Additional Remarks Schedule, may be attached if more space is required)

Project: City of Columbia - Installation of Parking Gate Arms and related equipment. The City of Columbia, its elected officials and employees are included as Additional Insureds as respects to General Liability as required by written contract The Umbrella policy is Follows Form. General Liability policy shall be Primary and Non-Contributory with any other insurance in force for or which may be purchased by Additional Insured, as required by written contract. Waiver of Subrogation applies in favor of Additional Insured as required by written contract. Should any of the above described policies be cancelled before the expiration date thereof, notice will be delivered in accordance with the policy provisions.

CERTIFICATE HOLDER

City of Columbia
Finance Department
ATTN: City Purchasing Agent
P.O. Box 6015
Columbia MO 65205-6015

CANCELLATION

SHOULD ANY OF THE ABOVE DESCRIBED POLICIES BE CANCELLED BEFORE THE EXPIRATION DATE THEREOF, NOTICE WILL BE DELIVERED IN ACCORDANCE WITH THE POLICY PROVISIONS.

AUTHORIZED REPRESENTATIVE
Sharon D. Brainard

© 1988-2015 ACORD CORPORATION. All rights reserved.

EXHIBIT G

CONTRACTOR'S AFFIDAVIT FOR FINAL PAYMENT

EXHIBIT G

AFFIDAVIT FOR FINAL PAYMENT

TO ALL WHOM IT MAY CONCERN:

KNOW ALL PERSONS BY THESE PRESENTS, THAT WHEREAS, the undersigned

_____

Contractor Address City State

hereinafter referred to as Contractor, and the City of Columbia, Missouri, hereinafter referred to as Owner, have heretofore entered into a certain written Contract dated the_____day of _____, 20_____, covering work to be performed and material to be furnished for:

_____

Name of Project

WHEREAS, Contractor has performed work, and furnished materials as provided under said Contract up to and including the date hereof, and upon supplying proper waiver of liens, is entitled to payment from the Owner for the sum of:

_____DOLLARS,

Balance of said Contract

NOW, THEREFORE, in order to induce the Owner to make payment of said sum, and if said sum represents the balance due under said Contract, to induce the acceptance of said work and materials by the Owner, Contractor hereby represents that all work performed and materials furnished under said Contract up to and including the date hereof, including work and materials, if any, performed or furnished by subcontractors and material suppliers, have been paid in full, and Contractor hereby waives any and all liens, rights of liens, and claims on or against the premises at the address above given, or on any and all structures and buildings located thereon, arising under any law of the State wherein said premises are situated, and hereby releases and agrees to save harmless the Owner from and against any and all claims for and on account of work performed, or materials furnished by or for Contractor under said Contract or otherwise, Contractor represents that all Sales and Use taxes, if any, applicable to any material furnished by or for Contractor, have been paid in full.

_____

Contractor

Personally appeared before me, a Notary Public, within and for the County of

_____,

State of Missouri, the person whose signature appears above, PERSONALLY AND KNOWN TO ME AND ACKNOWLEDGED, that signed the foregoing Affidavit for the purposes therein stated.

Subscribed and sworn to me this_____day of_____, 20_____.
My Commission expires_____, 20___.

_____

(Notary Public)

EXHIBIT H

FINAL RECEIPT OF PAYMENT AND RELEASE

Exhibit H

FINAL RECEIPT OF PAYMENT AND RELEASE

KNOW ALL PERSONS BY THESE PRESENTS, THAT:

_____

hereinafter called "Subcontractor" who heretofore entered into a Subcontract with

_____, hereinafter called "Contractor", for the performance of work and/or the furnishing of material for the construction of a project entitled:

_____,
(Project Title and Project Number)

for the City of Columbia, Missouri, hereinafter called "Owner", which said Subcontract is by this reference incorporated herein, in consideration of such final payment by Contractor, DOES HEREBY:

1. ACKNOWLEDGE that they have been paid in full all sums due them for everything done by them, or done by their subcontractors, material vendors, equipment and fixture suppliers, agents and employees, or otherwise in performance of the work called for by the aforesaid Contract and all modifications or extras or additions thereto, for the construction of said project or otherwise.

2. RELEASE and fully, finally, and forever discharge Contractor and the Owner of and from any and all suits and actions, claims and demands of whatsoever kind or character arising out of or in any manner related to anything and everything done or omitted by Subcontractor, its agents and employees, in the performance of or connected with its/their performance of said work, or otherwise.

3. REPRESENT that all of its employees, subcontractors, material vendors, equipment and fixture suppliers and everyone else has been paid in full all sums due them, or any of them, in connection with performance of said work, or anything done or omitted by them or any of them in connection with the construction of said improvements, or otherwise.

DATED, this_____ day of_____, 20_____.

_____
Name of Subcontractor

_____
Typed or Printed Name

_____
Signature

_____
Title

EXHIBIT I

MISSOURI DIVISION OF LABOR STANDARDS ANNUAL WAGE ORDER APPLICABLE FOR THE PROJECT

EXHIBIT I

Missouri
Division of Labor Standards

WAGE AND HOUR SECTION

JEREMIAH W. (JAY) NIXON, Governor

Annual Wage Order No. 23

Section 010

BOONE COUNTY

In accordance with Section 290.262 RSMo 2000, within thirty (30) days after a certified copy of this Annual Wage Order has been filed with the Secretary of State as indicated below, any person who may be affected by this Annual Wage Order may object by filing an objection in triplicate with the Labor and Industrial Relations Commission, P.O. Box 599, Jefferson City, MO 65102-0599. Such objections must set forth in writing the specific grounds of objection. Each objection shall certify that a copy has been furnished to the Division of Labor Standards, P.O. Box 449, Jefferson City, MO 65102-0449 pursuant to 8 CSR 20-5.010(1). A certified copy of the Annual Wage Order has been filed with the Secretary of State of Missouri.

Original Signed by
John E. Lindsey, Director
Division of Labor Standards

This Is A True And Accurate Copy Which Was Filed With The Secretary of State: March 10, 2016

Last Date Objections May Be Filed: April 11, 2016

Prepared by Missouri Department of Labor and Industrial Relations

OCCUPATIONAL TITLE	** Date of Increase	*	Basic Hourly Rates	Over-Time Schedule	Holiday Schedule	Total Fringe Benefits
Asbestos Worker (H & F) Insulator			$32.36	55	60	$21.41
Boilermaker	7/16		$35.93	57	7	$28.33
Bricklayer and Stone Mason			$29.26	59	7	$16.91
Carpenter	6/16		$25.16	60	15	$16.10
Cement Mason			$27.55	9	3	$12.20
Communication Technician	6/16		$31.80	28	7	$12.90 + 13%
Electrician (Inside Wireman)	6/16		$31.80	28	7	$12.90 + 13%
Electrician (Outside-Line Construction\Lineman)			$42.27	43	45	$5.25 + 36%
Lineman Operator			$36.45	43	45	$5.25 + 36%
Groundman			$28.13	43	45	$5.25 + 36%
Elevator Constructor		a	$46.04	26	54	$31.645
Glazier	6/16		$26.87	122	76	$11.78
Ironworker			$28.41	11	8	$24.04
Laborer (Building):						
General			$22.36	42	44	$13.19
First Semi-Skilled			$24.36	42	44	$13.19
Second Semi-Skilled			$23.36	42	44	$13.19
Lather			USE CARPENTER RATE			
Linoleum Layer and Cutter	6/16		$25.04	60	15	$16.10
Marble Mason			$21.66	124	74	$12.68
Marble Finisher			$14.14	124	74	$9.08
Millwright	6/16		$26.16	60	15	$16.10
Operating Engineer						
Group I	6/16		$28.86	86	66	$24.98
Group II	6/16		$28.86	86	66	$24.98
Group III	6/16		$27.61	86	66	$24.98
Group III-A	6/16		$28.86	86	66	$24.98
Group IV	6/16		$26.63	86	66	$24.98
Group V	6/16		$29.56	86	66	$24.98
Painter	6/16		$23.24	18	7	$11.78
Pile Driver	6/16		$26.16	60	15	$16.10
Pipe Fitter	7/16	b	$38.00	91	69	$26.93
Plasterer			$26.09	94	5	$12.25
Plumber	7/16	b	$38.00	91	69	$26.93
Roofer \ Waterproofer			$29.30	12	4	$14.87
Sheet Metal Worker	7/16		$31.34	40	23	$17.04
Sprinkler Fitter - Fire Protection	7/16		$33.49	33	19	$19.45
Terrazzo Worker			$28.73	124	74	$14.38
Terrazzo Finisher			$18.68	124	74	$14.38
Tile Setter			$21.66	124	74	$12.68
Tile Finisher			$14.14	124	74	$9.08
Traffic Control Service Driver			$26.415	22	55	$9.045
Truck Driver-Teamster						
Group I			$25.30	101	5	$10.70
Group II			$25.95	101	5	$10.70
Group III			$25.45	101	5	$10.70
Group IV			$25.95	101	5	$10.70

Fringe Benefit Percentage is of the Basic Hourly Rate

**Annual Incremental Increase

OCCUPATIONAL TITLE	** Date of Increase	Basic Hourly Rates	Over-Time Schedule	Holiday Schedule	Total Fringe Benefits

* Welders receive rate prescribed for the occupational title performing operation to which welding is incidental.

Use Building Construction Rates on Building construction in accordance with the classifications of construction work established in 8 CSR 30-3.040(2).

Use Heavy Construction Rates on Highway and Heavy construction in accordance with the classifications of construction work established in 8 CSR 30-3.040(3).

a - Vacation: Employees over 5 years - 8%; Employees under 5 years - 6%
**b - All work over $7 Mil. Total Mech. Contract - $38.00, Fringes - $26.93
All work under $7 Mil. Total Mech. Contract - $36.66, Fringes - $21.49
c - Vacation: Employees after 1 year - 2%; Employees after 2 years - 4%; Employees after 10 years - 6%

REPLACEMENT PAGE
BOONE COUNTY
BUILDING CONSTRUCTION - OVERTIME SCHEDULE

FED: Minimum requirement per Fair Labor Standards Act means time and one-half (1 ½) shall be paid for all work in excess of forty (40) hours per work week.

NO. 9: Means the regular workday starting time of 8:00 a.m. (and resulting quitting time of 4:30 p.m.) may be moved forward to 6:00 a.m. or delayed one hour to 9:00 a.m. All work performed in excess of the regular work day and on Saturday shall be compensated at one and one-half (1½) times the regular pay. In the event time is lost during the work week due to weather conditions, the Employer may schedule work on the following Saturday at straight time. All work accomplished on Sunday and holidays shall be compensated for at double the regular rate of wages. The work week shall be Monday through Friday, except for midweek holidays.

NO. 11: Means eight (8) hours shall constitute a day's work, with the starting time to be established between 6:00 a.m. and 8:00 a.m. from Monday to Friday. Time and one-half (1½) shall be paid for first two (2) hours of overtime Monday through Friday and the first eight (8) hours on Saturday. All other overtime hours Monday through Saturday shall be paid at double (2) time rate. Double (2) time shall be paid for all time on Sunday and recognized holidays or the days observed in lieu of these holidays.

NO. 12: Means the work week shall commence on Monday at 12:01 a.m. and shall continue through the following Friday, inclusive of each week. All work performed by employees anywhere in excess of forty (40) hours in one (1) work week, shall be paid for at the rate of one and one-half (1½) times the regular hourly wage scale. All work performed within the regular working hours which shall consist of a ten (10) hour work day except in emergency situations. Overtime work and Saturday work shall be paid at one and one-half (1½) times the regular hourly rate. Work on recognized holidays and Sundays shall be paid at two (2) times the regular hourly rate.

NO. 18: Means the regular work day shall be eight (8) hours. Working hours are from six (6) hours before Noon (12:00) to six (6) hours after Noon (12:00). The regular work week shall be forty (40) hours, beginning between 6:00 a.m. and 12:00 Noon on Monday and ending between 1:00 p.m. and 6:00 p.m. on Friday. Saturday will be paid at time and one-half (1½). Sunday and Holidays shall be paid at double (2) time. Saturday can be a make-up day if the weather has forced a day off, but only in the week of the day being lost. Any time before six (6) hours before Noon or six (6) hours after Noon will be paid at time and one-half (1½).

NO. 22: Means a regular work week of forty (40) hours will start on Monday and end on Friday. The regular work day shall be either eight (8) or ten (10) hours. If a crew is prevented from working forty (40) hours Monday through Friday, or any part thereof by reason of inclement weather, Saturday or any part thereof may be worked as a make-up day at the straight time rate. Employees who are part of a regular crew on a make-up day, notwithstanding the fact that they may not have been employed the entire week, shall work Saturday at the straight time rate. A workday is to begin between 6:00 a.m. and 9:00 a.m. However, the project starting time may be advanced or delayed if mutually agreed to by the interest parties. For all time worked on recognized holidays, or days observed as such, double (2) time shall be paid.

NO. 26: Means that the regular working day shall consist of eight (8) hours worked between 6:00 a.m., and 5:00 p.m., five (5) days per week, Monday to Friday, inclusive. Hours of work at each jobsite shall be those established by the general contractor and worked by the majority of trades. (The above working hours may be changed by mutual agreement). Work performed on Construction Work on Saturdays, Sundays and before and after the regular working day on Monday to Friday, inclusive, shall be classified as overtime, and paid for at double (2) the rate of single time. The employer may establish hours worked on a jobsite for a four (4) ten (10) hour day work week at straight time pay for construction work; the regular working day shall consist of ten (10) hours worked consecutively, between 6:00 a.m. and 6:00 p.m., four (4) days per week, Monday to Thursday, inclusive. Any work performed on Friday, Saturday, Sunday and holidays, and before and after the regular working day on Monday to Thursday where a four (4) ten (10) hour day workweek has been established, will be paid at two times (2) the single time rate of pay. The rate of pay for all work performed on holidays shall be at two times (2) the single time rate of pay.

REPLACEMENT PAGE
BOONE COUNTY
BUILDING CONSTRUCTION - OVERTIME SCHEDULE

NO. 28: Means a regular workday shall consist of eight (8) hours between 7:00 a.m. and 5:30 p.m., with at least a thirty (30) minute period to be taken for lunch. Five (5) days a week, Monday through Friday inclusive, shall constitute a work week. The Employer has the option for a workday/workweek of four (4) ten (10) hour days (4-10's) provided:

-The project must be for a minimum of four (4) consecutive days.
-Starting time may be within one (1) hour either side of 8:00 a.m.
-Work week must begin on either a Monday or Tuesday: If a holiday falls within that week it shall be a consecutive work day. (Alternate: If a holiday falls in the middle of a week, then the regular eight (8) hour schedule may be implemented).
-Any time worked in excess of any ten (10) hour work day (in a 4-10 hour work week) shall be at the appropriate overtime rate.

All work outside of the regular working hours as provided, Monday through Saturday, shall be paid at one & one-half (1½) times the employee's regular rate of pay. All work performed from 12:00 a.m. Sunday through 8:00 a.m. Monday and recognized holidays shall be paid at double (2) the straight time hourly rate of pay. Should employees work in excess of twelve (12) consecutive hours they shall be paid double time (2X) for all time after twelve (12) hours. Shift work performed between the hours of 4:30 p.m. and 12:30 a.m. (second shift) shall receive eight (8) hours pay at the regular hourly rate of pay plus ten (10%) percent for seven and one-half (7½) hours work. Shift work performed between the hours of 12:30 a.m. and 8:00 a.m. (third shift) shall receive eight (8) hours pay at the regular hourly rate of pay plus fifteen (15%) percent for seven (7) hours work. A lunch period of thirty (30) minutes shall be allowed on each shift. All overtime work required after the completion of a regular shift shall be paid at one and one-half (1½) times the shift hourly rate.

NO. 33: Means the standard work day and week shall be eight (8) consecutive hours of work between the hours of 6:00 a.m. and 6:00 p.m., excluding the lunch period Monday through Friday, or shall conform to the practice on the job site. Four (4) days at ten (10) hours a day may be worked at straight time, Monday through Friday and need not be consecutive. All overtime, except for Sundays and holidays shall be at the rate of time and one-half (1½). Overtime worked on Sundays and holidays shall be at double (2) time.

NO. 40: Means the regular working week shall consist of five (5) consecutive (8) hour days' labor on the job beginning with Monday and ending with Friday of each week. Four (4) 10-hour days may constitute the regular work week. The regular working day shall consist of eight (8) hours labor on the job beginning as early as 6:00 a.m. and ending as late as 5:30 p.m. All full or part time labor performed during such hours shall be recognized as regular working hours and paid for at the regular hourly rate. All hours worked on Saturday and all hours worked in excess of eight (8) hours but not more than twelve (12) hours during the regular working week shall be paid for at time and one-half (1½) the regular hourly rate. All hours worked on Sundays and holidays and all hours worked in excess of twelve (12) hours during the regular working day shall be paid at two (2) times the regular hourly rate. In the event of rain, snow, cold or excessively windy weather on a regular working day, Saturday may be designated as a "make-up" day. Saturday may also be designated as a "make-up" day, for an employee who has missed a day of work for personal or other reasons. Pay for "make-up" days shall be at regular rates.

REPLACEMENT PAGE
BOONE COUNTY
BUILDING CONSTRUCTION - OVERTIME SCHEDULE

NO. 42: Means eight (8) hours between the hours of 8:00 a.m. and 4:30 p.m. shall constitute a work day. The starting time may be advanced one (1) or two (2) hours. Employees shall have a lunch period of thirty (30) minutes. The Employer may provide a lunch period of one (1) hour, and in that event, the workday shall commence at 8:00 a.m. and end at 5:00 p.m. The workweek shall commence at 8:00 a.m. on Monday and shall end at 4:30 p.m. on Friday (or 5:00 p.m. on Friday if the Employer grants a lunch period of one (1) hour), or as adjusted by starting time change as stated above. All work performed before 8:00 a.m. and after 4:30 p.m. (or 5:00 p.m. where one (1) hour lunch is granted for lunch) or as adjusted by starting time change as stated above or on Saturday, except as herein provided, shall be compensated at one and one-half (1½) times the regular hourly rate of pay for the work performed. All work performed on Sunday and on recognized holidays shall be compensated at double (2) the regular hourly rate of pay for the work performed. When working a five 8-hour day schedule and an Employer is prevented from working forty (40) hours, Monday through Friday, or any part thereof by reason of inclement weather (rain or mud), Saturday or any part thereof may be worked as a make-up day at the straight time rate. The Employer shall have the option of working five eight (8) hour days or four ten (10) hour days Monday through Friday. If an Employer elects to work five (5) eight (8) hour days during any work week, hours worked more than eight (8) per day or forty (40) hours per week shall be paid at time and one-half (1½) the hourly rate Monday through Friday. If an Employer elects to work four (4) ten (10) hour days in any week, work performed more than ten (10) hours per day or forty (40) hours per week shall be paid at time and one-half (1½) the hourly rate Monday through Friday. If an Employer is working ten (10) hour days and loses a day due to inclement weather, they may work ten (10) hours Friday at straight time. All hours worked over the forty (40) hours Monday through Friday will be paid at time and one-half (1½) overtime rate. Overtime shall be computed at half-hour intervals. Shift Work: Two (2) or three (3) shifts shall be permitted, provided such shifts are scheduled for a minimum of three (3) consecutive days. The second shift shall begin at 4:30 p.m. and end at 12:30 a.m. with one-half (1/2) hour for lunch between 7:30 p.m. and 9:00 p.m. and shall received eighty (8) hours' pay. The third shift shall begin at 12:30 a.m. and end at 8:00 a.m. with one-half (1/2) hour for lunch between 3:30 a.m. and 5:00 a.m. and shall received (8) hour's; pay. There shall be at least one (1) foreman on each shift on jobs where more than one shift is employed, provided that there are two (2) or more employees on second and on the third shifts. All shifts shall arrange to interchange working hours at the end of each week. When three shifts are used, the applicable rate must be paid from Saturday at 8:00 a.m. until the following Monday at 8:00 a.m. When three shifts are employed, the second and third shifts shall contain at least one-half (1/2) as many employees as the first shift.

NO. 43: Eight (8) hours shall constitute a work day between the hours of 7:00 a.m. and 4:30 p.m. Forty (40) hours within five (5) days, Monday through Friday inclusive, shall constitute the work week. Work performed in the 9th and 10th hour, Monday through Friday, shall be paid at time and one-half (1½) the regular straight time rate of pay. Contractor has the option to pay two (2) hours per day at the time and one-half (1½) the regular straight time rate of pay between the hours of 6:00 a.m. and 5:30 p.m., Monday through Friday. Work performed outside the regularly scheduled working hours and on Saturdays, Sundays and recognized legal holidays, or days celebrated as such, shall be paid for at the rate of double (2) time.

NO. 55: Means the regular work day shall be eight (8) hours between 6:00 a.m. and 4:30 p.m. The first two (2) hours of work performed in excess of the eight (8) hour work day, Monday through Friday, and the first ten (10) hours of work on Saturday, shall be paid at one & one-half (1½) times the straight time rate. All work performed on Sunday, observed holidays and in excess of ten (10) hours a day, Monday through Saturday, shall be paid at double (2) the straight time rate.

REPLACEMENT PAGE
BOONE COUNTY
BUILDING CONSTRUCTION - OVERTIME SCHEDULE

NO. 57: Means eight (8) hours per day shall constitute a day's work and forty (40) hours per week, Monday through Friday, shall constitute a week's work. The regular starting time shall be 8:00 a.m. If a second or third shift is used, the regular starting time of the second shift shall be 4:30 p.m. and the regular starting period for the third shift shall be 12:30 a.m. These times may be adjusted by the employer. The day shift shall work a regular eight (8) hours shift as outlined above. Employees working a second shift shall receive an additional $0.25 above the regular hourly rate and perform seven and one-half (7½) hours work for eight (8) hours pay. Third shift employees shall be paid an additional $0.50 above the regular hourly rate and work seven (7) hours for eight (8) hours pay. When circumstances warrant, the Employer may change the regular workweek to four (4) ten-hour days at the regular time rate of pay. All time worked before and after the established workday of eight (8) hours, Monday through Friday, and all time worked on Saturday shall be paid at the rate of time and one-half (1½) except in cases where work is part of an employee's regular Friday shift. All time worked on Sunday and recognized holidays shall be paid at the double (2) time rate of pay except in cases where work is part of an employee's previous day's shift. For all overtime hours worked $27.04 of the fringe benefits portion of the prevailing wage shall be paid at the same overtime rate at which the cash portion of the prevailing wage is to be paid. The remaining $1.29 of the fringe benefit portion of the prevailing wage may be paid at straight time.

NO. 59: Means that except as herein provided, eight (8) hours a day shall constitute a standard work day, and forty (40) hours per week shall constitute a week's work. All time worked outside of the standard eight (8) hour work day and on Saturday shall be classified as overtime and paid the rate of time and one-half (1½). All time worked on Sunday and holidays shall be classified as overtime and paid at the rate of double (2) time. The Employer has the option of working either five (5) eight hour days or four (4) ten hour days to constitute a normal forty (40) hour work week. When the four (4) ten-hour work week is in effect, the standard work day shall be consecutive ten (10) hour periods between the hours of 6:30 a.m. and 6:30 p.m. Forty (40) hours per week shall constitute a week's work, Monday through Thursday, inclusive. In the event the job is down for any reason beyond the Employer's control, then Friday and/or Saturday may, at the option of the Employer, be worked as a make-up day; straight time not to exceed ten (10) hours or forty (40) hours per week. When the five day eight (8) hour work week is in effect, forty (40) hours per week shall constitute a week's work, Monday through Friday, inclusive. In the event the job is down for any reason beyond the Employer's control, then Saturday may, at the option of the Employer, be worked as a make-up day; straight time not to exceed eight (8) hours or forty (40) hours per week. The regular starting time (and resulting quitting time) may be moved to 6:00 a.m. or delayed to 9:00 a.m. Make-up days shall not be utilized for days lost due to holidays.

NO. 60: Means the Employer shall have the option of working five 8-hour days or four 10-hour days Monday through Friday. If an Employer elects to work five 8-hour days during any work week, hours worked more than eight (8) per day or forty (40) per week shall be paid at time and one-half (1½) the hourly wage rate plus fringe benefits Monday through Friday. SATURDAY MAKE-UP DAY: If an Employer is prevented from working forty (40) hours, Monday through Friday, or any part thereof by reason of inclement weather (rain or mud), Saturday or any part thereof may be worked as a make-up day at the straight time rate. It is agreed by the parties that the make-up day is not to be used to make up time lost due to recognized holidays. If an Employer elects to work four 10-hour days, between the hours of 6:30 a.m. and 6:30 p.m. in any week, work performed more than ten (10) hours per day or forty (40) hours per week shall be paid at time and one half (1½) the hourly wage rate plus fringe benefits Monday through Friday. If an Employer is working 10-hour days and loses a day due to inclement weather, the Employer may work ten (10) hours on Friday at straight time. All hours worked over the forty (40) hours Monday through Friday will be paid at time and one-half (1½) the hourly wage rate plus fringe benefits. All Millwright work performed in excess of the regular work day and on Saturday shall be compensated for at time and one-half (1½) the regular Millwright hourly wage rate plus fringe benefits. The regular work day starting at 8:00 a.m. (and resulting quitting time of 4:30 p.m.) may be moved forward to 6:00 a.m. or delayed one (1) hour to 9:00 a.m. All work accomplished on Sundays and recognized holidays, or days observed as recognized holidays, shall be compensated for at double (2) the regular hourly rate of wages plus fringe benefits. NOTE: All overtime is computed on the hourly wage rate plus an amount equal to the fringe benefits.

REPLACEMENT PAGE
BOONE COUNTY
BUILDING CONSTRUCTION - OVERTIME SCHEDULE

NO. 86: The regular workday shall consist of eight (8) consecutive hours, exclusive of a thirty (30) minute lunch period, with pay at the straight time rate with all hours in excess of eight (8) hours in any one day to be paid at the applicable overtime rate at time and one-half (1½). The regular workday shall begin between the hours of 6:00 a.m. and 8:00 a.m. The Employer may have the option to schedule the work week from Monday through Thursday at ten (10) hours per day at the straight time rate of pay with all hours in excess of ten (10) hours in any one day to be paid at the applicable overtime rate at time and one-half (1½). If the Employer elects to work from Monday through Thursday and is stopped due to inclement weather, holiday or other conditions beyond the control of the Employer, they shall have the option to work Friday at the straight time rate of pay to complete the forty (40) hours for the workweek. All overtime work performed on Monday through Saturday shall be paid at time and one-half (1½) the hourly rate. Fringe benefits shall be paid at the one and one half the hourly rate. All work performed on Sundays and recognized holidays shall be paid at double (2) the hourly rate. Fringe benefits shall be paid at double the hourly rate. Shifts may be established when considered necessary by the Employer. Shift hours and rates will be as follows. If shifts are established, work on the First Shift will begin between 6:00 a.m. and 9:00 a.m. and consist of eight (8) hours of work plus one-half hour unpaid lunch. Hours worked during the first shift will be paid at the straight time rate of pay. The second shift shall start eight hours after the start of the first shift and consist of eight (8) hours of work plus one-half hour unpaid lunch. Work on the second shift will begin between 2:00 p.m. and 5:00 p.m. and be paid the straight time rate plus $2.50 per hour. The third shift shall start eight hours after the start of the second shift and consist of eight (8) hours plus one-half hour unpaid lunch. Work on the third shift will begin between 10:00 p.m. and 1:00 a.m. and be paid the straight time rate plus $3.50 per hour. The additional amounts that are to be paid are only applicable when working shifts. Shifts that begin on Saturday morning through those shifts which end on Sunday morning will be paid at time and one-half these rates. Shifts that begin on Sunday morning through those shifts which end on Monday morning will be paid at double time these rates.

NO. 91: Means eight (8) hours shall constitute a day's work commencing at 7:00 a.m. and ending at 3:30 p.m., allowing one-half (½) hour for lunch. The option exists for the Employer to use a flexible starting time between the hours of 6:00 a.m. and 9:00 a.m. The regular workweek shall consist of forty (40) hours of five (5) workdays, Monday through Friday. The workweek may consist of four (4) ten (10) hour days from Monday through Thursday, with Friday as a make-up day. If the make-up day is a holiday, the employee shall be paid at the double (2) time rate. The employees shall be paid time and one-half (1½) for work performed on Saturdays, before the regular starting time or after the regular quitting time or over eight (8) hours per work day (unless working a 10-hour work day, then time and one-half (1½) is paid for work performed over ten (10) hours a day) or over forty (40) hours per work week. Work performed on Sundays and recognized holidays shall be paid at the double (2) time rate of pay. SHIFT WORK: When it is necessary for the project to operate in shifts, there will be three (3) eight (8) hour shifts commencing at 8:00 a.m. Shift work must continue for a period of not less than three (3) consecutive work days, two (2) days which must be regular work days (Monday through Friday). In the event the second or third shift of any regular work day shall fall into a Saturday or a holiday, such extension into a Saturday or holiday shall be considered as part of the previous workday and employees shall be paid at the regular shift rate. The first day shift shall work a regular eight (8) hour day at regular rates. The second shift shall be eight (8) hours regular time pay plus $2.50 per hour premium for eight (8) hours work. Third shift will be for eight (8) hours regular time pay plus $3.00 per hour premium for eight (8) hours work.

NO. 94: Means eight (8) hours shall constitute a day's work between the hours of 8:00 a.m. and 5:00 p.m. The regular workday starting time of 8:00 a.m. (and resulting quitting time of 4:30 p.m.) may be moved forward to 6:00 a.m. or delayed one (1) hour to 9:00 a.m. All work performed in excess of the regular work day and on Saturday shall be compensated at one and one-half (1½) times the regular pay. In the event time is lost during the work week due to weather conditions, the Employer may schedule work on the following Saturday at straight time. All work accomplished on Sunday and holidays shall be compensated at double the regular rate of wages.

REPLACEMENT PAGE
BOONE COUNTY
BUILDING CONSTRUCTION - OVERTIME SCHEDULE

NO. 101: Means that except as provided below, eight (8) hours a day shall constitute a standard work day, and forty (40) hours per week shall constitute a week's work, which shall begin on Monday and end on Friday. All time worked outside of the standard work day and on Saturday shall be classified as overtime and paid the rate of time and one-half (1½) (except as herein provided). All time worked on Sunday and recognized holidays shall be classified as overtime and paid at the rate of double (2) time. The regular starting time of 8:00 a.m. (and resulting quitting time of 4:30 p.m.) may be moved forward to 6:00 a.m. or delayed one (1) hour to 9:00 a.m. The Employer has the option of working either five (5) eight-hour days or four (4) ten-hour days to constitute a normal forty (40) hour work week. When a four (4) ten-hour day work week is in effect, the standard work day shall be consecutive ten (10) hour periods between the hours of 6:30 a.m. and 6:30 p.m. Forty (40) hours per week shall constitute a week's work Monday through Thursday, inclusive. In the event the job is down for any reason beyond the Employer's control, then Friday and/or Saturday may, at the option of the Employer, be worked as a make-up day; straight time not to exceed ten (10) hours per day or forty (40) hours per week. Starting time will be designated by the employer. When the five (5) day eight (8) hour work week is in effect, forty (40) hours per week shall constitute a week's work, Monday through Friday, inclusive. In the event the job is down for any reason beyond the Employer's control, then Saturday may, at the option of the Employer, be worked as a make-up day; straight time not to exceed eight (8) hours per day or forty (40) hours per week. Make-up days shall not be utilized for days lost due to holidays.

NO. 122: Means the regular workday shall be (8) hours. The regular work week shall be forty (40) hours, beginning 6:00 a.m. on Monday and ending 6:00 p.m. on Friday. Saturday will be time and one-half (1½). Sunday and Holidays shall be double (2) time. Saturday can be a make-up day if weather has forced a day off.

NO. 124: Means eight (8) hours shall constitute a day's work on all classes of work between the hours of 6:00 a.m. and 5:30 p.m., Monday through Friday. The pay for time worked during these hours shall be at the regular wage rate. The regular workweek shall be Monday through Friday. Employment from 4:30 p.m. to 12:00 midnight, Monday through Friday, shall be paid for at one and one-half (1½) times the regular hourly rate. From 12:00 midnight until 8:00 a.m. on any day shall be paid for at twice the regular hourly rate. All time worked on Sundays and the recognized holidays shall be paid at the rate of double (2) time. It is understood that forty (40) hours shall constitute a regular workweek, (5-8's) Sunday Midnight through Friday Midnight, understanding anything over eight (8) hours is one and one-half (1½) times the hourly wage rate.

BOONE COUNTY
HOLIDAY SCHEDULE – BUILDING CONSTRUCTION

NO. 3: All work done on New Year's Day, Decoration Day, July 4th, Labor Day, Veteran's Day, Thanksgiving and Christmas shall be compensated at the double (2) time rate of pay. When any of these holidays fall on a Sunday, the following Monday shall be observed.

NO. 4: All work done on New Year's Day, Memorial Day, Independence Day, Labor Day, Thanksgiving and Christmas Day shall be paid at the double time rate of pay. If any of the above holidays fall on Sunday, Monday will be observed as the recognized holiday. If any of the above holidays fall on Saturday, Friday will be observed as the recognized holiday and holidays falling on Sunday will be observed on the following Monday.

NO. 5: All work that shall be done on New Year's Day, Memorial Day, Independence Day, Labor Day, Veteran's Day, Thanksgiving Day, and Christmas Day shall be paid twice the amount of his or her regular hourly wage rate for each hour of fraction thereof worked on any such day .

NO. 7: The following days are assigned days and are recognized as holidays: New Year's Day, Memorial Day, Independence Day, Labor Day, Veteran's Day, Thanksgiving Day, and Christmas Day. If a holiday falls on a Sunday, it shall be observed on the following Monday. If a holiday falls on a Saturday, it shall be observed on the preceding Friday. No work shall be performed on Labor Day except in case of jeopardy to work under construction. This is applied to protect Labor Day. When a holiday falls during the normal workweek, Monday through Friday, it shall be counted as eight (8) hours toward the forty (40) hour week. However, no reimbursement for these eight (8) hours is to be paid to the workman unless worked. If workman are required to work the above enumerated holidays or days observed as such, or on Sunday, they shall receive double (2) the regular rate of pay for such work.

NO. 8: All work performed on New Year's Day, Memorial Day, Independence Day, Labor Day, Veteran's Day, Thanksgiving Day, and Christmas Day, or the days observed in lieu of these holidays, shall be paid at the double time rate of pay.

NO. 15: All work accomplished on the recognized holidays of New Year's Day, Decoration Day (Memorial Day), Independence Day (Fourth of July), Labor Day, Veteran's Day, Thanksgiving Day and Christmas Day, or days observed as these named holidays, shall be compensated for at double (2) the regular hourly rate of wages plus fringe benefits. If a holiday falls on Saturday, it shall be observed on the preceding Friday. If a holiday falls on a Sunday, it shall be observed on the following Monday. No work shall be performed on Labor Day, Christmas Day, Decoration Day or Independence Day except to preserve life or property.

NO. 19: All work done on New Year's Day, Memorial Day, July 4th, Labor Day, Thanksgiving Day, and Christmas Day shall be paid at the double time rate of pay. The employee may take off Friday following Thanksgiving Day. However, the employee shall notify his or her Foreman, General Foreman or Superintendent on the Wednesday preceding Thanksgiving Day. When one of the above holidays falls on Sunday, the following Monday shall be considered a holiday and all work performed on either day shall be at the double (2) time rate. When one of the holidays falls on Saturday, the preceding Friday shall be considered a holiday and all work performed on either day shall be at the double (2) time rate.

NO. 23: All work done on New Year's Day, Memorial Day, Independence Day, Labor Day, Veteran's Day, Thanksgiving Day, Christmas Day and Sundays shall be recognized holidays and shall be paid at the double time rate of pay. When a holiday falls on Sunday, the following Monday shall be considered a holiday. When a holiday falls on Saturday, Friday is recognized as a holiday.

NO. 44: All work done on New Year's Day, Decoration Day, Independence Day, Labor Day, Veteran's Day, Thanksgiving Day, and Christmas Day shall be paid at the double time rate of pay. If a holiday falls on a Sunday, it shall be observed on the Monday following. If a holiday falls on a Saturday, it shall be observed on the proceeding Friday. No work shall be performed on these days except in emergency to protect life or property. All work performed on these holidays shall be compensated at double the regular hourly rate for the work performed. Overtime shall be computed at half-hour intervals.

NO. 45: All work performed on New Year's Day, Memorial Day, Independence Day, Labor Day, Veteran's Day, Thanksgiving Day, the day after Thanksgiving, the day before Christmas, and Christmas Day, shall be paid at the double time rate of pay.

BOONE COUNTY
HOLIDAY SCHEDULE – BUILDING CONSTRUCTION

NO. 54: All work performed on New Year's Day, Memorial Day, Independence Day, Labor Day, Veteran's Day, Thanksgiving Day, the Friday after Thanksgiving Day, and Christmas Day shall be paid at the double (2) time rate of pay. When a holiday falls on Saturday, it shall be observed on Friday. When a holiday falls on Sunday, it shall be observed on Monday.

NO. 55: The following days are recognized as holidays: New Year's Day, Memorial Day, Independence Day, Labor Day, Thanksgiving Day and Christmas Day. If a holiday falls on a Sunday, it shall be observed on the following Monday. No work shall be performed on Labor Day except in case of jeopardy to work under construction. This rule is applied to protect Labor Day. When a holiday falls during the normal work week, Monday through Friday, it shall be counted as eight (8) hours toward the forty (40) hour week; however, no reimbursement for this eight (8) hours is to be paid the workmen unless worked. An Employer working a four (4) day, ten (10) hour schedule may use Friday as a make up day when an observed holiday occurs during the work week. Employees have the option to work that make up day. If workmen are required to work the above enumerated holidays, or days observed as such, they shall receive double (2) the regular rate of pay for such work.

NO. 60: All work performed on New Year's Day, Armistice Day (Veteran's Day), Decoration Day (Memorial Day), Independence Day (Fourth of July), Thanksgiving Day and Christmas Day shall be paid at the double time rate of pay. No work shall be performed on Labor Day except when triple (3) time is paid. When a holiday falls on Saturday, Friday will be observed as the holiday. When a holiday falls on Sunday, the following Monday shall be observed as the holiday.

NO. 66: All work performed on Sundays and the following recognized holidays, or the days observed as such, of New Year's Day, Decoration Day, Fourth of July, Labor Day, Veteran's Day, Thanksgiving Day and Christmas Day, shall be paid at double (2) the hourly rate plus an amount equal to the hourly Total Indicated Fringe Benefits. Whenever any such holidays fall on a Sunday, the following Monday shall be observed as a holiday.

NO. 69: All work performed on New Year's Day, Memorial Day, July Fourth, Labor Day, Veteran's Day, Thanksgiving Day or Christmas Day shall be compensated at double (2) their straight-time hourly rate of pay. Friday after Thanksgiving and the day before Christmas are also holidays, however, if the employer chooses to work the normal work hours on these days, the employee will be paid at straight -time rate of pay. If a holiday falls on a Saturday, the holiday will be observed on Saturday; if a holiday falls on a Sunday, the holiday will be observed on the following Monday.

NO. 74: All work performed on New Year's Day, Memorial Day, Fourth of July, Labor Day, Veteran's Day, Thanksgiving Day and Christmas Day, shall be paid at double (2) time of the hourly rate of pay. In the event one of the above holiday's falls on Saturday, the holiday shall be celebrated on Saturday. If the holiday falls on Sunday, the holiday will be celebrated on Monday.

NO. 76: The following days are recognized as holidays: New Years Day, Memorial Day, Independence Day, Labor Day, Veterans Day, Thanksgiving Day, and Christmas. No work of any pretense shall be performed on Charismas Day or Independence Day. Any work performed on the other holidays shall be paid for at least two (2) times the regular rate of pay. If a holiday falls on a Sunday, the following Monday will be observed. If a holiday falls on a Saturday, the preceding Friday will be observed.

OCCUPATIONAL TITLE	* Date of Increase	Basic Hourly Rates	Over-Time Schedule	Holiday Schedule	Total Fringe Benefits
Carpenter	6/16	$30.83	23	16	$16.10
Electrician (Outside-Line Construction\Lineman)		$42.27	9	12	$5.25 + 36%
Lineman Operator		$36.45	9	12	$5.25 + 36%
Lineman - Tree Trimmer		$24.15	32	31	$9.98 + 3%
Groundman		$28.13	9	12	$5.25 + 36%
Groundman - Tree Trimmer		$17.84	32	31	$7.50 + 3%
Laborer					
General Laborer	6/16	$27.96	2	4	$13.17
Skilled Laborer	6/16	$27.96	2	4	$13.17
Millwright	6/16	$30.83	23	16	$16.10
Operating Engineer					
Group I	6/16	$27.94	21	5	$24.87
Group II	6/16	$27.59	21	5	$24.87
Group III	6/16	$27.39	21	5	$24.87
Group IV	6/16	$23.74	21	5	$24.87
Oiler-Driver	6/16	$23.74	21	5	$24.87
Pile Driver	6/16	$30.83	23	16	$16.10
Traffic Control Service Driver		$26.415	28	27	$9.045
Truck Driver-Teamster					
Group I	6/16	$29.27	25	21	$12.45
Group II	6/16	$29.43	25	21	$12.45
Group III	6/16	$29.42	25	21	$12.45
Group IV	6/16	$29.54	25	21	$12.45

Use Heavy Construction Rates on Highway and Heavy construction in accordance with the classifications of construction work established in 8 CSR 30-3.040(3).

Use Building Construction Rates on Building construction in accordance with the classifications of construction work established in 8 CSR 30-3.040(2).

If a worker is performing work on a heavy construction project within an occupational title that is not listed on the Heavy Construction Rate Sheet, use the rate for that occupational title as shown on the Building Construction Rate sheet.

REPLACEMENT PAGE
BOONE COUNTY
OVERTIME SCHEDULE - HEAVY CONSTRUCTION

FED: Minimum requirement per Fair Labor Standards Act means time and one-half (1 ½) shall be paid for all work in excess of forty (40) hours per work week.

NO. 2: Means a regular workweek shall be forty (40) hours and will start on Monday and end on Friday. The Employer shall have the option of working five 8-hour days or four 10-hour days Monday through Friday. If an Employer elects to work five 8-hour days during any workweek, hours worked more than eight (8) per day or 40 per week shall be paid at time and one-half the hourly rate Monday through Friday. If an Employer elects to work four 10-hour days in a week, work performed more than ten (10) hours per day or 40 hours per week shall be paid at time and one-half the hourly rate Monday through Friday. When working a five 8-hour day schedule and an Employer is prevented from working forty (40) hours Monday through Friday, or any part thereof, by reason of inclement weather, Saturday or any part thereof may be worked as a make-up day at the straight time rate. If an Employer is working a four 10-hour day schedule and loses a day due to inclement weather, he may work 10 hours Friday at straight time. All hours worked over the 40 hours Monday through Friday will be paid at 1 ½ overtime rate. A workday shift is to begin at the option of the Employer, between 6:00 a.m. and not later than 9:00 a.m. However, the project starting time may be advanced or delayed if required. If workmen are required to work the enumerated holidays or days observed as such or Sundays, they shall receive double (2) the regular rate of pay for such work. Overtime shall be computed at one-half (1/2) hour intervals. Shift: The Contractor may elect to work one, two or three shifts on any work. When operating on more than one shift, the shifts shall be known as the day shift, swing shift, and graveyard shift as such terms are recognized in the industry. When two shifts are worked on any operation, the shifts will consist of eight (8) or ten (10) hours exclusive of lunchtime. When three shifts are worked the first day or day shift will consist of eight (8) hours exclusive of lunchtime. The second or swing shift shall consist of seven and one-half (7 1/2) hours work for eight hours pay, exclusive of lunchtime, and the third or the graveyard shift shall consist of seven (7) hours work for eight (8) hours pay, exclusive of the lunchtime. All time in excess of normal shifts shall be considered overtime. Multiple shift (the two or three shift) operation will not be construed on the entire project if at anytime it is deemed advisable and necessary for the Employer to multiple shift a specific operation. However, no shift shall be started between midnight and six a.m. except the graveyard shift on a three-shift operation, or except in an unusual or emergency situation. If an Employer starts a shift between midnight and 6 a.m. except the graveyard shift on a three-shift operation, he shall reimburse all employees for the entire shift at the double time rate. Completion of the second shift on a two-shift operation or completion of the graveyard shift on a three-shift operation that carries over into Saturday morning, shall be at the straight time rate. Overtime shall be computed at ½ hour intervals.

NO. 9: Eight (8) hours shall constitute a work day between the hours of 7:00 a.m. and 4:30 p.m. Forty (40) hours within five (5) days, Monday through Friday inclusive, shall constitute the work week. Work performed in the 9th and 10th hour, Monday through Friday, shall be paid at time and one-half (1½) the regular straight time rate of pay. Contractor has the option to pay two (2) hours per day at the time and one-half (1½) the regular straight time rate of pay between the hours of 6:00 a.m. and 5:30 p.m., Monday through Friday. Worked performed in the first eight (8) hours on Saturday shall be paid at the rate of one and eight tenths (1.8) the regular straight time rate. Work performed outside these hours and on Sundays and recognized legal holidays, or days celebrated as such, shall be paid for at the rate of double (2) time.

NO. 21: Means the regular workday for which employees shall be compensated at straight time hourly rate of pay shall, unless otherwise provided for, begin at 8:00 a.m. and end at 4:30 p.m. However, the project starting time may be advanced or delayed at the discretion of the Employer. At the discretion of the Employer, when working a five (5) day eight (8) hour schedule, Saturday may be used for a make-up day. If an Employer is prohibited from working on a holiday, that employer may work the following Saturday at the straight time rate. However, the Employer may have the option to schedule his work from Monday through Thursday at ten (10) hours per day at the straight time rate of pay with all hours in excess of ten (10) hours in any one day to be paid at the applicable overtime rate. If the Employer elects to work from Monday through Thursday and is stopped due to circumstances beyond his control, he shall have the option to work Friday or Saturday at the straight time rate of pay to complete his forty (40) hours. If an Employer is prohibited from working on a holiday, that Employer may work the following Friday or Saturday at the straight time rate. Overtime will be at one and one-half (1½) times the regular rate. If workmen are required to work the enumerated holidays or days observed as such, or Sundays, they shall receive double (2) the regular rate of pay for such work.

REPLACEMENT PAGE
BOONE COUNTY
OVERTIME SCHEDULE - HEAVY CONSTRUCTION

NO. 23: Means the regular workweek shall start on Monday and end on Friday, except where the Employer elects to work Monday through Thursday, (10) hours per day. All work over ten (10) hours in a day or forty (40) hours in a week shall be at the overtime rate of one and one-half (1½) times the regular hourly rate. The regular workday shall be either eight (8) or ten (10) hours. If a job can't work forty (40) hours Monday through Friday because of inclement weather or other conditions beyond the control of the Employer, Friday or Saturday may be worked as a make-up day at straight time (if working 4-10's). Saturday may be worked as a make-up day at straight time (if working 5-8's). An Employer, who is working a four (4) ten (10) hour day work schedule may use Friday as a make-up day when a workday is lost due to a holiday. A workday is to begin at the option of the Employer but not later than 11:00 a.m. except when inclement weather, requirements of the owner or other conditions beyond the reasonable control of the Employer prevent work. Except as worked as a make-up day, time on Saturday shall be worked at one and one-half (1½) times the regular rate. Work performed on Sunday shall be paid at two (2) times the regular rate. Work performed on recognized holidays or days observed as such, shall also be paid at the double (2) time rate of pay. For all overtime hours worked during the week or on Saturday $15.55 of the fringe benefits portion of the prevailing wage shall be paid at time and one-half (1½). For all overtime hours worked on Sundays or recognized holidays $15.55 of the fringe benefits portion of the prevailing wage shall be paid double time. The remaining $.55 of the fringe benefit portion of the prevailing wage shall be paid at straight time.

NO. 25: Means a regular work week of forty (40) hours, starting on Monday and ending on Friday. The regular work day shall be either eight (8) or ten (10) hours. If a crew is prevented from working forty (40) hours Monday through Friday, or any part thereof by reason of inclement weather, Saturday or any part thereof maybe worked as a make-up day at the straight time rate. Employees who are part of a regular crew on a make-up day, notwithstanding the fact that they may not have been employed the entire week, shall work Saturday at the straight time rate. A work day is to begin between 6:00 a.m. and 9:00 a.m. However, the project starting time maybe advanced or delayed if mutually agreed to by the interest parties. All hours worked on recognized holidays, or days observed as such, double (2) time shall be paid.

NO. 28: Means a regular work week of forty (40) hours will start on Monday and end on Friday. The regular work day shall be either eight (8) or ten (10) hours. If a crew is prevented from working forty (40) hours Monday through Friday, or any part thereof by reason of inclement weather, Saturday or any part thereof may be worked as a make-up day at the straight time rate. Employees who are part of a regular crew on a make-up day, notwithstanding the fact that they may not have been employed the entire week, shall work Saturday at the straight time rate. A workday is to begin between 6:00 a.m. and 9:00 a.m. However, the project starting time may be advanced or delayed if mutually agreed to by the interest parties. For all time worked on recognized holidays, or days observed as such, double (2) time shall be paid.

NO. 32: Means the overtime rate shall be time and one-half the regular rate for work over forty (40) hours per week. Sundays and Holidays shall be paid at double the straight time rate.

BOONE COUNTY
HOLIDAY SCHEDULE – HEAVY CONSTRUCTION

NO. 4: All work performed on New Year's Day, Memorial Day, Independence Day, Labor Day, Thanksgiving Day, Christmas Day, or observed as such, shall be paid at the double time rate of pay. When a Holiday falls on a Sunday, Monday shall be observed. No work shall be performed on Labor Day, except in case of jeopardy to life or property. This is applied to protect Labor Day.

NO. 5: The following days are recognized as holidays: New Year's Day, Memorial Day, Fourth of July, Labor Day, Thanksgiving Day and Christmas Day. If a holiday falls on a Sunday, it shall be observed on the following Monday. If a holiday falls on a Saturday, it shall be observed on the preceding Friday. No work shall be performed on Labor Day except in case of jeopardy to work under construction. This rule is applied to protect Labor Day. When a holiday falls during the normal work week, Monday through Friday, it shall be counted as eight (8) hours toward a forty (40) hour week; however, no reimbursement for this eight (8) hours is to be paid the workman unless worked. If workmen are required to work the above recognized holidays or days observed as such, or Sundays, they shall receive double (2) the regular rate of pay for such work. The above shall apply to the four 10's Monday through Friday work week. The ten (10) hours shall be applied to the forty (40) hour work week.

NO. 12: All work performed on New Year's Day, Memorial Day, Fourth of July, Labor Day, Veteran's Day, Thanksgiving Day, Christmas Day, or days celebrated as such, shall be paid at the double time rate of pay. When one of the foregoing holidays falls on Sunday, it shall be celebrated on the following Monday. When one of the foregoing holidays falls on Saturday, it shall be celebrated on the Friday before the holiday.

NO. 16: The following days are recognized as holidays: New Year's Day, Memorial Day, Fourth of July, Labor Day, Thanksgiving Day and Christmas Day. If a holiday falls on Sunday, it shall be observed on the following Monday. If a holiday falls on Saturday, it shall be observed on the preceding Friday. No work shall be performed on Labor Day except in case of jeopardy to work under construction. This rule is applied to protect Labor Day. When a holiday falls during the normal work week, Monday through Friday, it shall be counted as eight (8) hours toward the forty (40) hour week; however, no reimbursement for this eight (8) hours is to be paid to the worker unless worked. If workers are required to work the above recognized holidays or days observed as such, they shall receive double (2) the regular rate of pay for such work.

NO. 21: The following days are recognized as holidays: New Year's Day, Memorial Day, Independence Day, Labor Day, Thanksgiving Day and Christmas Day. If a holiday falls on a Sunday, it shall be observed on the following Monday. No work shall be performed on Labor Day except in case of jeopardy to work under construction. This rule is applied to protect Labor Day. When a holiday falls during the normal work week, Monday through Friday, it shall be counted as eight (8) hours toward the forty (40) hour week; however, no reimbursement for this eight (8) hours is to be paid the workman unless worked. An Employer working a four (4) day, ten (10) hour schedule may use Friday as a make-up day when an observed holiday occurs during the work week. Employees have the option to work that make-up day. If workmen are required to work the above enumerated holidays, or days observed as such, they shall receive double (2) the regular rate of pay for such work.

NO. 27: The following days are recognized as holidays: New Year's Day, Memorial Day, Independence Day, Labor Day, Thanksgiving Day and Christmas Day. If a holiday falls on a Sunday, it shall be observed on the following Monday. No work shall be performed on Labor Day except in case of jeopardy to work under construction. This rule is applied to protect Labor Day. When a holiday falls during the normal work week, Monday through Friday, it shall be counted as eight (8) hours toward the forty (40) hour week; however, no reimbursement for this eight (8) hours is to be paid the workmen unless worked. An Employer working a four (4) day, ten (10) hour schedule may use Friday as a make up day when an observed holiday occurs during the work week. Employees have the option to work that make up day. If workmen are required to work the above enumerated holidays, or days observed as such, they shall receive double (2) the regular rate of pay for such work.

NO. 31: All work performed on New Year's Day, Presidents' Day, Veterans' Day, Good Friday, Decoration Day, Fourth of July, Labor Day, Christmas Eve Day, Christmas Day, Thanksgiving Day and Day after Thanksgiving or days celebrated for the same.

EXHIBIT J

AFFIDAVIT OF COMPLIANCE WITH PREVAILING WAGE LAW

EXHIBIT J

AFFIDAVIT OF COMPLIANCE WITH THE PREVAILING WAGE LAW

Before me, the undersigned Notary Public, in and for the County of_____,

State of_____, personally came and appeared_____,
(Name)

_____, of the_____,
(Position) (Company Name)

a (Corporation), (Partnership), (Proprietorship), and after being duly sworn, did depose and say that all provisions and requirements set out in Chapter 290, Sections 290.210 through and including 290.340, Missouri Revised Statues, pertaining to the payment of wages to workmen employed on public works projects have been fully satisfied and there has been no exception to the full and complete compliance with said provisions and requirements and with Annual Wage Order No._____issued by the Missouri Division of Labor Standards on the_____day of_____, 20_____, in carrying out the Contract and work in connection with:

_____
(Name of Project)

located at _____in

_____County, Missouri, and completed on the _____day of

_____, 20_____.

_____
(Signature)

Personally appeared before me, a Notary Public, within and for the County of

_____,

State of Missouri, the person whose signature appears above, PERSONALLY AND KNOWN TO ME AND ACKNOWLEDGED, that signed the foregoing Affidavit for the purposes therein stated.

Subscribed and sworn to me this_____day of_____, 20_____.

My Commission expires_____, 20___.

_____
(Notary Public)

EXHIBIT K

WORK AUTHORIZATION AFFIDAVIT

EXHIBIT B

NOTICE TO VENDORS

Sections 285.525 To 285.550 RSMo.

Pursuant to section 285.530 (1) RSMo., No business entity or employer shall knowingly employ, hire for employment, or continue to employ an unauthorized alien to perform work within the State of Missouri.

As a condition for the award of any contract or grant in excess of five thousand dollars by the state or by any political subdivision of the state to a business entity, or for any business entity receiving a state-administered or subsidized tax credit, tax abatement, or loan from the state, the business entity shall, by sworn affidavit and provision of documentation, affirm its enrollment and participation in a federal work authorization program with respect to the employees working in connection with the contracted services. Every such business entity shall sign an affidavit affirming that it does not knowingly employ any person who is an unauthorized alien in connection with the contracted services. {RSMo 285.530 (2)}

An Employer may enroll and participate in a federal work authorization program and shall verify the employment eligibility of every employee in the employer's hire whose employment commences after the employer enrolls in a federal work authorization program. **The E-verify system issues a Memorandum of Understanding once enrollment is complete; the City of Columbia requires a copy of this document be attached to the Work Authorization Affidavit.** The employer shall retain a copy of the dated verification report received from the federal government. Any business entity that participates in such program shall have an affirmative defense that such business entity has not violated subsection 1 of this section. **{RSMo 285.530 (4)}**

For vendors that are not already enrolled and participating in a federal work authorization program, E-Verify is an example of this type of program. Information regarding E-Verify is available at: http://www.dhs.gov/e-verify

EXHIBIT K

CITY OF COLUMBIA, MISSOURI
WORK AUTHORIZATION AFFIDAVIT
PURSUANT TO 285.530 RSMo
(FOR ALL BIDS IN EXCESS OF $5,000.00)

County of Butler)
)SS.
State of Pennsylvania)

My name is John D. Lovell. I am an authorized agent of HUB Parking Technology (Bidder). This business is enrolled and participates in a federal work authorization program for all employees working in connection with services provided to the City of Columbia. This business does not knowingly employ any person who is an unauthorized alien in connection with the services being provided. **Documentation of participation in a federal work authorization program is attached to this affidavit.**

Furthermore, all subcontractors working on this contract shall affirmatively state in writing in their contacts that they are not in violation of Section 285.530.1 RSMo and shall not thereafter be in violation. Alternatively, a subcontractor may submit a sworn affidavit under penalty of perjury that all employees are lawfully present in the United States.

Affiant

JOHN D. LOVELL
Printed Name

Personally appeared before me, a Notary Public, within and for the County of Butler, State of ~~Missouri~~ Pennsylvania, the person whose signature appears above, PERSONALLY AND KNOWN TO ME AND ACKNOWLEDGED, that signed the foregoing Affidavit for the purposes therein stated.

Subscribed and sworn to me this 8th day of August, 2017.
My Commission expires May 1, 2021.

(Notary Public)

COMMONWEALTH OF PENNSYLVANIA
NOTARIAL SEAL
John Ciroli Jr., Notary Public
Cranberry Twp, Butler County
My commission expires May 01, 2021

EXHIBIT L

CONTRACTOR'S PROPOSAL DATED OCTOBER 21, 2016 WITH REVISED PRICING DATED MAY 12, 2017

EXHIBIT L

Request for Proposal (RFP) 157/ 2016 – Parking Gate Arm for the City of Columbia, Missouri

Finance/Purchasing Division
Cale Turner, CPPB
Purchasing Agent
701 E. Broadway, 5th Floor
Columbia, MO 65201

DATAPARK
Lazar Milanov
Regional Account Manager
lazar.milanov@hubparking.com

HUB Parking Technology
a Business Unit of the FAAC Group
HUB Parking Technology USA, Inc.
627 N. Albany Avenue, Suite 141
Chicago, IL 60612
Phone: 312-623-7275
www.hubparking.us

October 21, 2016

Finance/Purchasing Division
Cale Turner, CPPB
Purchasing Agent
701 E. Broadway, 5th Floor
Columbia, MO 65201

HUB Parking Technology USA Inc. Transmittal Letter

Dear Mr. Turner,

HUB Parking Technology USA, Inc. is pleased to submit the following proposal to replace and/or add to the current Parking Access Revenue Control System (PARCS) in the City of Columbia's parking facilities.

HUB strives to provide our clients with the lowest total cost of ownership by offering innovative and reliable products backed by experienced service technicians. We control all aspects of the product from R&D to manufacturing, sales and distribution, to post installation support.

We are a direct sales organization. By working with HUB you are buying factory direct with no middleman / distributors involved so our prices are very competitive.

HUB Parking Technology USA, Inc. warrants its product to be free of defects in materials and workmanship for a period of two (2) years parts and labor from the date of substantial completion.

After the equipment is installed, it will be serviced by our factory trained hardware and software technicians from our St. Louis MO and Chicago offices.

For all of the civil work (electrical /conduit / cables / concrete) requested in this RFP we are planning to use a local Electrical Company – Mid Missouri Electric ,Inc. located at 1917 Paris Road, Columbia, MO 65201 . Contact person Larry Stales, President; phone: 573-875-1545 / email: larry@midmissourielectric.com . Please refer to the attached quote from Mid Missouri Electric Inc.

We thank you for the opportunity to submit our proposal. We are very confident that we can bring a strong and positive impact to your parking operation and we would be honored to work with you in the years to come. We look forward to your questions and comments.

Please contact me at 312-623-7275 or email at lazar.milanov@hubparking.com if you have any questions. I would be more than happy provide any additional information and/or clarify any areas of the following proposal.

Respectfully submitted,
HUB Parking Technology USA Inc.

Lazar Milanov

Lazar Milanov
Regional Account Manager

John Lovell
Managing Director & CEO

TABLE OF CONTENTS

Section 1: Company History....5
Section 2: Response to Specification....7
Section 3: Qualifications/Other Information....17
Section 4: Pricing, Product Brochures and Payment Terms....26
Section 5: Warranty....27
Section 6: Experience....28
Section 7: Bid Bond....31
Section 8: W-9 Submission....32
Section 9: Requested form - Statement of Bidder's Qualifications....33
Section 10: Subcontracting....35
Section 11: Marketing Materials/Product Brochures....36

Section 1: Company History

Who we are

HUB Parking Technology is the FAAC Group Business Unit that develops, manufactures, installs and provides after-sales services for Parking Revenue Control Systems branded ZEAG and DATAPARK in the United States. HUB Parking Technology delivers the flexibility, professional expertise and close personal service of a local company, together with all the capabilities, and network strength of a global player. We are represented in North and South America, Europe, Africa, the Middle East, Asia and Australia.

Founded in 1965, FAAC built a company on business integrity, product innovation, and service after-the-sale. HUB Parking Technology was formed by successfully bringing together equipment manufacturers, **DATAPARK** (founded 1981), **ZEAG** (founded in 1971), **CTR Parking** (founded in 1992) and **Magnetic Autocontrol** to form one of the top parking equipment providers in the U.S.

HUB Parking Technology maintains offices in **St. Louis MO**, Chicago, Minneapolis, Boston, Cincinnati, Pittsburgh, Atlanta, Baltimore, Los Angeles, San Leandro, Philadelphia, Fort Lauderdale, and Washington DC. Our U.S. corporate headquarters is located in Warrendale, PA (Pittsburgh).

With over 2,000 installations across the nation, HUB Parking Technology is one of the most experienced suppliers of parking access installations in the country. We have confidently promoted this technology on both a local and national level, thereby providing us with one of the largest and most varied customer bases in the country.

The HUB Parking Technology range of products is synonymous with a long-standing reputation for the ability to combine several product generations within a single site. This allows you to maintain your existing parking facility equipment while taking advantage of the latest software features...protecting your investment.

What we do

HUB Parking Technology offers a total in-house solution. The core product is developed by HUB engineers based on input from our world-wide customers. Country-specific requirements are developed by HUB software engineers located in the U.S. Our R&D capability in the United States ensures the delivery of accurate and efficient customer solutions in the shortest possible time frames.

How we do it

HUB Parking Technology technicians have been factory trained to install and service our products and those technicians performing bench repairs on internal equipment components, have completed the specific training course(s) necessary to perform repairs per manufacturer specifications.

We utilize the project management tools such as Microsoft® Project and Auto Task®. These tools allow all team members and our customers' staff to clearly communicate all goals, schedules, questions, and to-do lists through an online application. Our project manager will meet weekly or more frequently with the entire installation team to discuss the short-term and long-term goals. The OSHA Standards, City policies, scheduling, and project goals will be discussed at these meetings to provide clear understanding for all team members.

The project team will assemble and test all configuration settings including rates, validations, and operations of the equipment before it is shipped to site. After the configuration settings are confirmed, a Factory Acceptance Test will commence. The FAT will be a rigorous process to ensure that all features and equipment operate as anticipated. Next the parking staff will begin training on the equipment so they are ready for immediate takeover and operation. HUB staff will work directly with the parking staff in the days following the initial launch and be available to respond immediately to any operational changes that may be required.

HUB Parking Technology will continue to provide the installation services, training, and development until substantial completion is achieved. We firmly believe that the reliability of the HUB brand parking solution is second to none in the industry and that a smoothly running operation contributes to an overall lower cost of ownership.

As a vertically integrated company that controls everything from design and manufacturing to installation, maintenance and support, we are positioned to achieve lower total cost of ownership (TCO) for the City of Columbia.

With over 10,000 installations worldwide, we are the only PARCS manufacturer that brings together nearly 100 years of combined experience, strengths and best practices providing integrated value-added solutions and a multitude of features, including Centralized Control Room, License Plate Recognition, License Plate Inventory, Contract Parking, Credit Card In / Out, Secured Credit Card Payment EMV and PCI, Business Intelligence and Transactional Reporting Service, Mobile Payment Solutions, Ground Transportation, among others.

We feel confident that our project management team, our dedicated technical support personnel and our new state-of-the-art parking access and revenue control system will exceed your expectations.

Section 2: Response to Specification

Offeror must be able to meet or exceed specifications as listed below:

- Gate arm ticket shall include a bar code or QR code to be used either on paper or phone. Permit customers shall swipe their proximity card not insert it.
  HUB Response: Comply

- Ability to track collections.
  HUB Response: Comply

- Gate arm shall only allow a certain number of hotel guests/jurors/hourly parkers in at one time.
  HUB Response: Comply

- Gate arm proximity card must be used at entry and exit before being allowed to be used at entry again, commonly referred to as "no pass-back."
  HUB Response: Comply

- Gate arm shall send out text/email alerts in case of jamb/malfunction.
  HUB Response: Comply

- Gate arm shall have the ability to remotely vend a gate.
  HUB Response: Comply

- Reader shall have the ability to set a minimum amount to be charged on credit/debit cards.
  HUB Response: Comply

- Gate arm has the ability to have audible instructions for customers.
  HUB Response: Comply

- Gate arm has an audible intercom system.
  HUB Response: Comply

- Gate arm reader shall be utilized with hotel proximity cards and permit proximity cards.
  HUB Response: Comply

- Gate arm readers shall be programmed to work with hotel guest room key (hotel has 112 rooms/parking spots).
  HUB Response: Comply

- Pay machine has the ability to accept City's pre-paid parking card

HUB Response: Comply. DataPark DP 11000 PARCS Software is integrated with MacKay readers and control boards to accept City's pre-paid parking cards.

- /refill/recharge City's pre-paid parking card.

HUB Response: Exception –

Per our conversation with Mackay Representatives (Jim Taylor and Greg Chauvin) currently their system is not designed to use a third party Point of Sale equipment for refill or recharge of the City pre-paid cards. In order for them to complete such integration it will cost over $ 200,000 for the Research and development (R&D) Work.

- Garage vacancies must be counted by vehicles crossing a loop (card must be swiped at entry and exit to be counted vacant), and be able to control for vacancy.

  HUB Response: Comply

- Garage entry/exits must have two (2) ticket scanners in the event that one malfunctions, the other could still be utilized.

  HUB Response: Comply

Pay Station Mini

- Pay machine shall be user friendly with minimal keys and passwords needed and easy to trouble shoot.

  HUB Response: Comply

- Gate arm must interface with Parkmobile, a pay-by-phone application.

  HUB Response: Comply

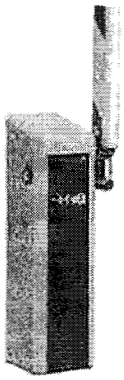

Magnetic MicroDrive Gate

- Gate arm must remain in the closed (down) position at all times. Arm shall allow someone to exit without paying only during free parking hours and must calculate how much is owed if timeframe encompasses both free and pay hours.

  HUB Response: Comply

- Gate arm shall accept vouchers for special events, meeting attendees, etc.

  HUB Response: Comply

- Gate arm payment module must be PCI, chip/pin compliant.

  HUB Response: Comply

- Pay machine will have the option to turn-off or forego the dispersal of change.
  HUB Response: Comply

Lane Entry Station

ENTRANCE GATE:
Vehicle enters the garage and pulls a ticket from the machine or swipes their proximity card. Ticket prints the barcode or QR code, the date and time, ticket number and any other pertinent information. The gate arm opens once a ticket is pulled or card is swiped, allowing vehicle access to parking areas.
HUB Response: Comply

Lane Exit Station

EXIT GATE:
Vehicle will enter the exit lane and may swipe their proximity card and gate arm will open. Vehicles without a proximity card will scan their entrance receipt and may pay via credit card or exact change.
HUB Response: Comply

REPORTS:
City of Columbia shall be able to access a variety of reports and pull various data based on certain criteria to include specific garages, vacancies, daily revenues, access control as well as others. Reports shall be downloadable and can be saved to Microsoft Word, Excel or other files as needed.
HUB Response: Understood and Comply
The HUB Parking Technology system comes with over 100 customized reports for parking operation (partial list below).

• *All Credit Card Payments by Card Company*	• *All Credit Card Payments by Company / Day / Station*
• *All Credit Card Payments by Day*	• *Cash Audit*
• *Cash Station Statistics (Daily)*	• *Cash Station Statistics (Manipulations)*
• *Credit Card Payments*	• *Current Cash Station Statistics*
• *Current Money Statistics*	• *Current Shift Report*
• *Midnight Money Statistics*	• *Movements All by Day by Station*
• *Movements All by Hour by Station*	• *Net Fees by Station (No Cc)*

• Net Fees for DP by Station	• Number of Payments by Tariff By Station
• Payments by Day	• Previous Shift Report
• Season Parker Movements by Card	• Shift Status Changes
• Shift Summary	• Validations by Car Park
• Validations by Site	• Validations by Station
• Validations (Cashier Stations Only)	• Credit Card Payments Live Confirmed
• Duration	• Counting: Miscellaneous
• Counting: Movements	• Counting: Occupation (Extended)
• Lost Tickets / Entry Tickets Shift Report	• Money Refill Report
• Movements By Hour By Station	• Occupancy By Car Park By Hour
• Occupancy By Day	• Occupancy By Hour
• Safe Changes	• Season Parker Movements
• Season Parker Movements (With Groups)	• Season Parker Movements By Card (With Groups)
• Season Parker Payments	• Season Parker Presence
• Season Parker Sector Overtime	• Season Parker Transactions
• Ticket Group Park Time Statistics Per Car Park	• Access Violations
• Cash Payments by Station by Time Range	• DP Card Last Usage
• DP Card Range Presence	• Cash Amount
• Entries / Exits By Day	• Entries / Exits By Hour
• Equipment Status	• Free Parking
• Log Entries (With Type Selection)	• Manual Gate Openings
• Parker Data Transactions	• Return Unit Changes
• SPM Block / Unblock Cards	• SPM Configuration (Order By Card Holder)
• SPM Configuration (Order By Customer)	• SPM Configuration (With Customers Creation Date)
• Credit Card Payments Confirmed Summary	• Credit Card Payments Outstanding Report
• Credit Card Payments Without Station Acknowledge	• Credit Card Presence
• Declined Credit Card Transaction Outstanding Report	• Counting: Usage
• Failure Report	• Occupancy By Car Park By Day
• Car Park Configuration (Order By Location)	• Car Park Configuration (Order By Car Park)
• Car Park Configuration (Order By Station)	• Ticket Entries / Exits
• Ticket Group Park Time Statistics	• Ticket Group Park Time Statistics Per Installation
• Ticket Group Statistics Ticket Presence	• Ticket Statistics (Daily)
• Communication Loss (Location Selection)	• Communication Loss (Polling Group Selection)
• Credit Card Payments (Vali-Mark Only)	• Daily Parking Duration Of A DP Card
• DP Card Presence	• DP Card Range Transactions
• DP Cards Reprogrammed	• DP Cards Sold / Programmed

• *DP Card Transactions*	• *E-Counting: Differences*
• *E-Counting: Frequencies*	• *Entries / Exits By Month*
• *Entries / Exits By PH Number By Day*	• *Entries / Exits By PH Number By Hour*
• *Entries / Exits By PH Number By Month*	• *Entries / Exits By PH Number By Week*
• *Entries / Exits By Week*	• *Failed Entries / Exits By Day*
• *Failed Entries / Exits By Hour*	• *Failed Entries / Exits By Month*
• *Failed Entries / Exits By Week*	• *Fixed Entries*
• *Card Range Transactions*	• *Location Statistics*
• *Log Entries*	• *Lost / Entry Tickets Sold*
• *Lost / Entry Ticket Usage*	• *Park Time By Day*
• *Users*	• *Credit Card Payments Batch Confirmed*
• *Database Cleaner Log*	• *Declined Credit Card Transaction Successful Resubmission*
• *Equipment Service (Car Park Selection)*	• *Equipment Service (Location Selection)*
• *Equipment Service Summary (Car Park Selection)*	• *Equipment Service Summary (Location Selection)*
• *Car Park Configuration (Order By Substation)*	• *Rebates By Day*
• *Table Documentation (Order By Name)*	• *Table Documentation (Order By Type)*

GARAGE LOCATIONS AND PERTINENT INFORMATION:

Short Street Garage –

Plan to replace existing gate arm system. There is currently an island and most infrastructure in place (cut-throughs, fiber optics, phone lines, conduit, etc). Project will require one (1) entry machine replacement, one (1) exit machine replacement (card payment only), replacement of two (2) pay on foot machines (pay on foot machines must have the ability to take cards and cash),

HUB Response: Understood and Comply.

and possibly one (1) exit gate arm with only proximity card reader

HUB Response – Per Addendum 1 the equipment for this lane is listed as an optional item and therefore it is not included in the total project cost.

and two (2) pay on foot machines (pay on foot machines need ability to take cards and cash). This garage is a mixture of hourly and permit spaces.
HUB Response: Understood and Comply

. This garage is a mixture of hourly, permit, reserved, hotel guest, and valet spaces.
HUB Response: Understood and Comply.

Plaza Garage –

Entrance

Exit

Plan to replace existing system that utilizes gate arms for a pull ticket or prox card and swipe card or cashier at booth upon leaving. There are islands and most infrastructure already in place here, though it is a very basic system and thus new conduit for fiber optics, phone lines, etc. may have to be installed. Location will require installation of two (2) entry machines, one (1) exit machine (card payment only), and one (1) exit gate arm with a proximity card reader only, and two (2) pay on foot machines (pay on foot machines need ability to take card and cash). This garage is a mixture of hourly, permit, and reserved spaces.
HUB Response: Understood and Comply

5th & Walnut –

Entrance/Exit

This location currently utilizes a pay on arrival at multi-space machine system. There is not a current gate arm system in place. There are no existing islands or cut throughs. Conduit and phone lines run to existing multi-space machine system. Islands will need to be installed along with one (1) entry machine, one (1) exit machine (card payment only),

HUB Response: Understood and Comply

possibly one (1) exit gate arm with only proximity card reader

HUB Response – Per Addendum 1 the equipment for this lane is listed as an optional item and therefore it is not included in the total project cost.

and two (2) pay on foot machines (pay on foot machines need ability to take cards and cash). This garage is a mixture of hourly and permit spaces.

HUB Response: Understood and Comply

6th & Cherry –

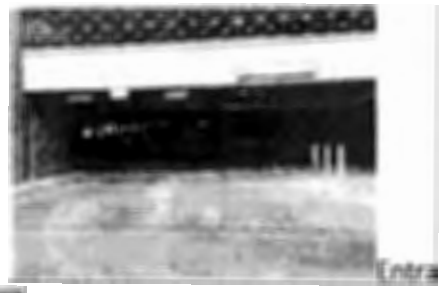

nce/Exit

Entrance

This location currently utilizes a pay on arrival at multi-space machine system. There is not a current gate arm system in place and there are no existing islands or cut throughs. There is conduit and phone lines run to existing multi-space machines. Location will need islands, ~~one (1)~~

HUB Response: Changed to two (2) (per Addendum 1),

entry machine, one (1) exit machine (card payment only),

HUB Response: Understood and Comply

possibly one (1) exit gate arm with only proximity card reader

HUB Response – Per Addendum 1 the equipment for this lane is listed as an optional item and therefore it is not included in the total project cost.

and two (2) pay on foot machines (pay on foot machines need ability to take cards and cash). This garage is a mixture of hourly and permit spaces.

HUB Response: Understood and Comply

Entrance/Exit

This location currently utilizes a pay on arrival at multi-space machine system. There is not a current gate arm system in place and there are no existing cut throughs. Conduit and phone lines run to existing multi-space pay machines. Islands do exist. Location will need two (2) entry machines, two (2) exit machines (card payment only), and two (2) pay on foot machines (pay on foot machines need ability to take cards and cash). This garage is a mixture of hourly and permit spaces.

HUB Response: Understood and Comply

8th & Cherry –

Entrance

Exit

This location currently utilizes single space coin only meters for hourly parking. There is not a current gate arm system in place there are no existing cut throughs. As there are no existing pay machines, conduit and phone lines will most likely need to be installed. Islands do exist. Location will need one (1) entry machine, one (1) exit machine (card payment only), and two (2) pay on foot machines (pay on foot machines need ability to take card and cash). This garage is a mixture of hourly, permit, reserved and valet spaces.

HUB Response: Understood and Comply

Section 3: Qualifications / Other Information

A. A brief description of the history and background of the offeror's firm, including the date established and ownership structure.
HUB Response: HUB Parking Technology USA, Inc. has been engaged in business under this name for four (4) years. Although just incorporated under this name in 2012 in the State of Delaware, the combined parking experience of the three companies combined to form HUB Parking Technology USA, Inc. is 103 years (ZEAG founded in 1971, Datapark founded in 1981 and CTR Parking in 1992).

John Lovell is the CEO and Managing Director of HUB Parking Technology USA, Inc.

B. Name, address, phone and fax number(s) and email address of firm.
HUB Response:
HUB Parking Technology USA, Inc. (US headquarters)
555 Keystone Drive
Warrendale, PA 15086
Telephone: 844-782-7275
Fax: 724-772-3664
www.hubparking.us

C. Name and title of primary contact person.
HUB Response:
Lazar Milanov
Regional Account Manager
HUB Parking Technology USA, Inc.
627 N. Albany Avenue, Suite 141
Chicago, IL 60612
Mobile: 312-623-7275
lazar.milanov@hubparking.com

D. Statement outlining the scope of the staff resources and range of the specialties offered by your firm.
HUB Response:

HUB Parking uses project management tools such as Microsoft® Project and Base Camp. These tools allow all team members and the client staff to clearly communicate all goals, schedules, questions, and to-do lists through an online application.

The project team will assemble the "Equipment Testing and Training Room" to test all configuration settings including rates, validations, and operations of the equipment. After the configuration settings are confirmed, a Factory Acceptance Test will commence. The FAT will be a rigorous process to ensure that all features and equipment operate as anticipated. Next the parking staff will begin training on the equipment so they are ready for immediate takeover and operation. HUB Parking Technology staff will work directly with the parking staff in the days following the initial launch and be available to respond immediately to any operational changes that may be required.

HUB Parking Technology will continue to provide the installation services, training, and development until completion is achieved.

The proposed Project Managers for this project are Lazar Milanov and Don Wilson. Their qualifications and experience are described below along with other key personnel that will be involved in this project.

Project Management/Installation Team:

***Lazar Milanov** – Regional Account Manager and primary client contact. He has been with HUB Parking Technology USA, Inc. since 2009. He has extensive experience and knowledge of parking management and operations. Over 30 HUB Installations*

***Don Wilson** - Project Manager. He will coordinate the installation process with the client and supervise and assist throughout the entire process. He has been with HUB Parking Technology USA, Inc. since 2000. Over 50 HUB installation.* Don earned his PMP certification in May of 2006 and is a PMP in good standing

***Mike Staesche** – Assistant Project Manager and main contact for the project installation. He will coordinate the installation process with the client and supervise and assist throughout the entire process. He has been with HUB Parking Technology USA, Inc. since 2013. Over 12 HUB installation.*

***Ivan Pantchev** – Service and Installation Supervisor. Ivan has over 15 years of experience in installing and servicing parking systems. He will provide remote and onsite software setup and also train the parking and airport staff. He has been with HUB Parking Technology USA, Inc. since 2009.*
Over 40 HUB installation

***Razvigor Andreev** – Software set up, training and post installation support. He will provide remote and onsite software setup and also train the parking and airport staff. He has been with HUB Parking Technology USA, Inc. since 2009.*
Over 30 HUB installation

Additional resources will be scheduled depending on the installation plan agreed upon with the client.

HUB Parking Technology will remove all of the existing parking equipment and bolt down and mount all of the new revenue equipment. All site work will include, but will not necessarily be limited to, electrical wire pulls, conduit runs, and equipment mounting. These items will follow all national, state, county, and local regulations, as well as manufacturer's installation requirements.

HUB Parking Technology will also install or repair, and warrant, as new, all ground loops at the parking facilities as part of the scope of work.

All areas of pavement, earth, and curbs disrupted during the project will be returned to an acceptable condition that is approved by Parking Operations staff.

E. List of similar work performed for other municipalities or agencies, including a description of work and the name of municipality or agency, and the action taken as a result of the work. A list of references shall be included.
HUB Response:

References

1. *Name of Business:* ***City Of Chicago / Millennium Garages***
   Contact Person: *Jim Healy / SP Plus Regional Manager*
   Telephone Number: *312-274-2027*
   Email Address: *jhealy@spplus.com*
   Project Description: *The project comprises four (4) garages which include 24 Entry Stations, 26 Exit Stations, 4 Fee Computers, 41 Pay-on-Foot Pay stations, 50 Gates, HUB Facility Management System Software and Hardware, Integration with Third Party Web Reservation systems (Park Mobil ,Spot Hero ,Park Whiz, Parking Panda), Integration with SP+ Account Receivable system (CARS)*

2. *Name of Business:* ***New Haven Parking Authority***
   Contact Person: *Brian Seholm*
   Telephone Number: *203-946-5917*
   Email Address: *bseholm@nhparking.com*
   Project Description: *The project comprises eight (8) garages which include 20 Entry Stations, 20 Exit Stations, 17 Fee Computers, 6 Pay-on-Foot Paystations, 45 Gates, HUB Facility Management System Software and Hardware, Variable Message Signs, Parking Guidance System Server and Software*

3. *Name of Business:* ***New Brunswick Parking Authority***
   Contact Person: *Harry J. Delgado*
   Telephone Number: *732-545-3118 ext. 112*
   Email Address: *hdelgado@njnbpa.org*
   Project Description: *The project comprises seven (7) parking decks which include 31 lanes, 15 Entry Stations, 16 Exit Stations, 26 Pay-on-Foot Paystations, Facility Management System Software and Hardware*

F. Discussion explaining why the Firm believes the City of Columbia would benefit from selection of the Firm to do the work.

HUB Response:

1. *We are a direct sales organization. By working with HUB you are buying factory direct with no middleman / distributors involved. The City of Columbia would be working directly with the manufacturer in matters concerning hardware, software, installation, training, support, and product development, providing you with elevated responsiveness to your requests.*

2. *As a global company, HUB Parking Technology has great depth of knowledge and competencies in equipment manufacturing and software development. We develop products for a worldwide market and share that knowledge across all markets. Our equipment is robust, reliable and designed for long-term performance. Our global, as well as local product development team(s), continually work toward and are cognizant of emerging technologies in the parking industry and develop innovative, state-of-the-art systems that make parking efficient for users as well as profitable and easy to manage for owners and operators.*

3. *With over 2,000 installations across the nation, HUB Parking Technology is one of the most experienced suppliers of parking access installations in the country .The reason for this growth is simple. We don't ask the customer to adapt their operation to our system, we ask how we can adapt our PARCS system to their operation.*

4. *HUB Parking Technology USA, Inc. warrants its product to be free of defects in materials and workmanship for a period of two (2) years parts and labor from the date of substantial completion.*

5. *Service is number one priority for us. After the equipment is installed, it will be serviced by our factory trained hardware and software technicians from our St. Louis MO and Chicago offices.*

6. *Application advantages include:*
    - ***Web Services Integration*** *with key functionalities such as online discounts, pre-book reservations, and mobile payments. We are integrated with Park Mobile , Click & Park, Spot Hero , Park Whiz, Parking Panda and Best Parking .*
    - ***Cloud Ready*** *option to help simplify your business and infrastructure and reduce your costs.*
    - ***Multilanguage*** *with the database fully supporting Unicode and R2L languages.*
    - ***Expandable*** *structure that can be scaled both horizontally (adding more servers) and vertically (adding more server power).*
    - ***Reliable*** *system that is designed with a robust architecture and supports redundancy.*
    - ***Designed for Parking Owners/Operators*** *with central control rooms with a heavy load of data.*

G. Description of the approach the Firm shall take to complete the work, including an estimate of the total time needed for the Firm to complete the work.
HUB Response: See Project Plan Overview below

PROJECT PLAN OVERVIEW

Immediately after the notice to proceed, an internal meeting will be held to prepare for the project. The Project Manager will be allocated and assumes control of the project.

The Project Manager will prepare the project plan which will include:

- *Procurement*
- *Communications Management Plan*
- *Project Schedule including Milestones*
- *Test Plan*
- *Design and Development Plan*
- *Change Management Plan*
- *Procurement Management Plan*
- *Project Scope (Scope Of Works)*
- *Risk Assessment*
- *Safety Plan*

At the first meeting with the customer, The Communications Plan, Project Scope, Change Management, Milestones and Schedule will be discussed and agreed.

After this meeting, the HUB Project Manager will complete the plans with the project team. Equipment and services will be ordered during the initial days of Phase 1 in accordance with the Procurement Plan.

HUB uses a web based online project management tool "BASECAMP" as an instrumental tool to communicate the project goals, documentation, questions, and schedules. All participants of the project will receive a login for usage of the system that they can access from a browser.

Basecamp has the ability to control documents, calendars, RFI/Questions, 'to do' lists and schedules. Items such as copies of Gantt charts can be uploaded and made available to the team. When items are uploaded, email notifications are sent out. Additionally, a user can subscribe to a daily digest that is sent out daily.

Procurement Management Plan

The Project Manager will be responsible for management of equipment supply, any selected vendor or external resource. The Project Manager will also measure performance as it relates to the vendor providing necessary goods and/or services and communicate this to the project team.

The Project Manager will identify items to be purchased, ensure that these meet the required schedule, and identify any critical items that may affect milestones and risk assessment.
Sub-Contractor Purchase Orders will also be defined and include:

- *Scope of works*
- *Schedule and milestone requirements*
- *Site specific installation requirements*
- *Contractual requirements*

Communications Management Plan

The Project Manager will work with the customer to draw up a communication plan. This plan will include project meetings, attendees and frequency. Depending on the meeting type, these meetings will be either via phone / conference call, onsite or internal meeting at our facility.

Schedule and Milestones

HUB Parking is no stranger to working with groups in the coordination, scheduling and commissioning of new parking access and control systems throughout the US and internationally. Recognizing the sensitivity and importance in delivering and installing systems to meet our customer's expectation, HUB is well aware of ensuring that these efforts are fully communicated with our customers.

The Project Milestones are established with the customer and identified within the project plan along with actions to be taken if changes are required. These milestones are also outlined within the project schedule.

Major milestones will be identified in the Project Plan in the form of a table (sample below).

Task			
	Month 1	***Month 2***	***Month 3***
Milestone - Project Signoff	♦		

Kickoff meeting all stakeholders determine all goals for hardware and software implementation. Define and initiate any development projects if needed.	♦		
Meet with Owner's Representatives and Subcontractors to determine equipment placement and coordinate electrical and concrete work.	♦		
Meet with Owner's IT to determine the availability and timelines for installing network and server equipment	♦		
Produce all necessary shop drawings and deliver to the Owner and Subcontractors		♦	
Equipment manufactured		♦	
Milestone - Equipment Delivery		♦	
Equipment unpacking and integrity check after delivery. Verifying all necessary components is accounted for.		♦	
Completing low voltage cable installations / overhead door		♦	
Deliver Testing Plan and Schedule to the Owner for approval		♦	
Installation of office, server, computer and network hardware		♦	
Bolt down lane equipment, Pay Stations, Entry / Exit Stations		♦	
Complete all low voltage terminations		♦	
Installation and configuration of all software (including server, database and credit cards)			♦
Complete all peripheral and lane controller programming and set up			♦
Commence Testing of Equipment			♦
Milestone - Substantial Project Completion			♦
Personnel Training and Certification on proper operation and maintenance.			♦
Milestone - Go Live			♦

HUB Parking utilizes Microsoft Project to create a schedule for use within the project. The Gantt chart will outline all of the project phases including work processes, resources and milestones. The Project Manager will be responsible for keeping this schedule updated and will circulate it to the project team as detailed in the communication plan.

Project Scope (Scope of Work)

The Scope of Work will be finalized detailing the deliverables and expectations of the project and who is responsible for each part. The Scope will include the items from the RFP response and detail further each deliverable.

Risk Assessment

Once the scope of work is defined, a risk analysis is performed on the project to determine the risk for each process / deliverable.

- *What could possibly go wrong?*
- *What is the likelihood of it happening?*
- *How will it affect the project?*
- *What can be done about it?*

Each risk is included in the Risk Matrix and assigned a probability and severity, along with a recommended action plan. This register is kept up to date during the life of the project and should an issue arise, the project team is notified.

Example of Risk Assessment Matrix

Potential Risk	Probability 1-5	Severity 1 - 5	Score P x S	Action Plan
Damage to a piece of equipment in transit	1	3	3	Utilize stock equipment in warehouse to replace component
Vender of "X" component not able to supply device to meet scheduled requirement	2	4	8	Alternative vender is already approved. New PO to be created and existing PO canceled.

Multiplying the probability with the severity derives the score. The lowest score = 1 and highest =25. High scores will result in a pre-approved action plan while lower risks are dealt with as the issue occurs or the score increases.

Each risk is scored and the highest results will be allocated an action plan and if necessary, the customer is made aware of the risk.

Design and Development Plan

Each project is evaluated for its requirements. Elements include:

- *Software Development*
- *Infrastructure Requirements*
- *Conduit Modification Plan*

Change Management Plan

Changes occur for several reasons; these can include customer requirements, unforeseen circumstances, or product substitution.

Each change is analyzed for cost and schedule impact. The team will discuss the implications and track these changes. The customer will be notified of these impacts and approval will be required before proceeding.

Each Change Order Request will be given an ID and tracked on the Change Order Log.

Installation

HUB and the subcontractors will meet prior to installation to discuss the installation phase. The Project Manager will then authorize the installation. In accordance with the Project Management Plan and Installation Plan, the installation team will be given the schedule. The customer will be consulted to draw up a traffic plan to ensure a smooth installation to reduce the inconvenience to the customer and or its patrons.

Installation will follow pre-authorized cabling requirements and connections to ensure the equipment is installed, commissioned, tested and placed into service as quickly and conveniently as possible.

Safety Plan

A Safety Plan will be drawn up and reflect all activities and ensure that safety is of the utmost importance. All parties, including subcontractors, will provide input that will ensure that all people visiting the site observe the company, OSHA, and customer specific requirements. The Plan will include safety considerations and requirements for each work process.

Quality Control

For the installation, a quality baseline is determined within the project design specification; it includes installation standards, standard equipment performance, and any customer specific requirements as detailed in the RFP response. This ensures that during testing, expectations are met.

H. Summary of any arrangements the Firm may be making with any other firm for assistance on this work project.
   HUB Response:

For all of the civil work (electrical /conduit / cables / concrete) requested in this RFP we are planning to use a local Electrical Company – Mid Missouri Electric, .Inc. located at 1917 Paris Road, Columbia, MO 65201. Contact person Larry Stales, President; phone: 573-875-1545 / email: larry@midmissourielectric.com

I. Statement of your understanding of the work and work plan. Include a description of the activities, and tasks that shall be undertaken to complete each of the objectives listed, but not necessarily limited to the specific objectives listed.
   HUB Response: .We have visited all of the site. HUB Parking understand the project scope of work. Information in regards to our work plan is covered in point G (above)

Section 4: Pricing

Pricing shall be broken out and clearly separated from the rest of the proposal.

HUB Response: Attached is copy of our quote for this project.

The replacement gate arms will be phased in over a five year period and the contract will be setup as a term and supply contract with an award for year one (1) with up to four (4) annual renewal options in order to complete the entire project.

HUB Response:

*The current prices are **valid until January 1st 2018** and thereafter are will adjust based on cost to produce labor statistics but will not exceed 3% annual increase of the prices for the remailing 4 years.*

City of Columbia

Date: 10/20/16

Parking Technology DATAPARK

Lazar Milanov
Regional Account Manager
3126237275
lazar.milanov@hubparking.com

HUB Parking Technology
a Business Unit of the FAAC Group

HUB Parking Technology USA, Inc.
627 N Albany Ave., Suite 141
Chicago
IL
60612
www.hubparking.us

Parking Technology HUB

QUOTE

Number LIFMQ1087-05
Date Oct 20, 2016

Customer	Project / Job
City of Columbia MELISSA PASLEY 701 E. BROADWAY, 5TH FLOOR Columbia, MO 65201	City of Columbia MELISSA PASLEY 701 E. BROADWAY, 5TH FLOOR Columbia, MO 65201

Presented By	Valid Through	Ship Via	Terms
Lazar Milanov	1/1/18	Best Way	50/40/10

Qty	Item	Description	Unit Price	Ext. Price
		HUB Parking Technology USA Inc. response to RFP # No: 157/2016. Installing new DataPark Barcode PARC System at City of Columbia Parking Facilities		
		HUB Management Software and server		
		FACILITY MANAGMENT COMPONENTS		
		DP 11000 PARCS Software		
1	2500.G00001	DP11000 Software License Packet		
1	NETEPAY ML	PARCS Credit Crd Processing, Multi-lane Software		
1		Integration with Third Party Web Reservation Systems (Park Mobile , Spot Hero . Click & Park, Park Whiz, Parking Panda, Best Parking , Parking Jokey,)		
1		Intergation with the City Current pre -paid cards (inlcuding McKey Development cost)		
		Facility Management Hardware		
1	R530	High End DP11000/JMS Combination (Rack Mountable)		
1	A7639351	SQL Server Std		
1	SG300-10PP	SG302-10P..Cisco SRW2008P-K9-NA 10-port 10/100 PoE Managed Switch		
1	A3851973	SmartRack 12U Wall Mount Rack Enclosure Cabinet with Plexiglass Front Door Insert		
1	E2214H	17" LCD Monitor		
1	1598763	Printers HP P2035 LaserJet (CDW 1598763)		
1		Workstation for Parking Office Server with LCD monitor, Windows 7, 16GB of RAM, 2xSSD hard drives and RAID 1 configuration. All Licenses included.		
6	02-114447	Elastix NLX Mini UCS Appliance -2FXS/2FXO		
		DP 6001 Mass Encoder		
1		DP 6001 Barcode Mass Encoder		

Continued on next page

Qty	Item	Description	Unit Price	Ext. Price
		INSTALLATIONA ND MOBILIZATION **HUB Installation**		
		-Install hardware and software **-Configure and commission system software** **-Train Operator users**		
1		HUB Installation		
		Total HUB Management Software and server		$72,875.09
		Short Street Garage		
		ENTRY AND EXIT LANE EQUIPMENT		
		DP 5900-6 EMV Ready Barcode Entry Station		
1	LEDP100003	Entry Station Base platform EMV Ready (DP5900)		
1	LEDP111001B	LCD Graphic display EMV Ready		
1	800MKL	Secure VoIP Intercom Module		
1	LEDP211001	HID Mini Prox 5365EGP04		
1	LEDP231001	Single Ticket Issue Button		
1	LEDP231003	Intercom Button		
1	LEDP311001	Voice Announcer		
2	LXDP301001	2D scan Honeywell 3310g under f. panel		
		DP 5800-6 EMV Ready Barcode Exit Station		
1	LXDP100003	Exit Station Base platform EMV Ready (DP5800)		
1	LXDP111001	LCD graphic display		
1	LXDP121002	Receipt Printer Axiom - int mounted		
1	800MKL	Secure VoIP Intercom Module		
1	LXDP211001	HID Mini Prox 5365EGP04		
1	LXDP231002	Receipt/Cancel Button		
1	LXDP231003	Intercom Button		
2	LXDP301001	2D scan Honeywell 3310g under f. panel		
1	LXDP311001	Voice Announcer		
1		EMV Card ReaderEthernet converter/Key injection Exit or Automatic Pay Station (LX/APL)		
1		MacKey Reader with control board for the City pre-paid parking cards		
		HUB Model Tall Parking.Pro Barrier Gate		
2	HUB PRO-M-LC010H0	HUB Model Tall Parking.Pro Barrier Gate w/ 10' Microboom, Fixed Flange, Light Grey, Left Hand		
2	KBB01c	Parts to Convert Straight to Art (8.2 ft clearance-bottom of boom to bottom of gate)		
4		Sawcut Vehicle Detector Loop - Hook-up to barrier gate Includes: Sawcut, wire and seal approximately 6 x 3' (18 Linear ft plus lead in)		
		PAY-ON-FOOT EQUIPMENT		

Continued on next page

Qty	Item	Description	Unit Price	Ext. Price
2	APMDP100001	Base platform		
2	APMDP111003	Color LCD 6,4 "		
2	APMDP181002	115 Volt Power Supply and Heater		
2	APMDP411002	BISCUIT + DP6020		
2	APMDP121002	Axiom Receipt Printer - int. Mounted		
2	APMDP131000	No Printing Unit		
2	APMDP141000	No Magnetic Head		
2	APMDP151005	No Magnetic Stripe Encoding		
2	APMDP171000	Housing color standard		
2	APMDP161000	Overlayr standard		
2	APMDP185002	TCP/IP		
2	APMDP191000	No Keypad		
2	APMDP201003	VoIP Secure Intercom 800M (Bracket Only)		
2	APMDP211000	No Proximity Reader		
2	APMDP231003	Intercom Button		
2	APMDP231004	Cancel Button		
2	APMDP231007	Lost Ticket Button		
2	APMDP251001	NRI Eagle		
2	APMDP261001	UBA10-SS 500 notes Bill Validator		
2	APMDP351002	MK4 Coin hopper - 3 Coins		
0	APMDP291001	No Notes Dispenser		
2	APMDP361000	No Fiscal Printer		
2	APMDP301001	Honey 3310g 2D scan under front panel		
2	APMDP311001	Voice Announcer		
2	APMDP321000	No IP Camera		
2	APMDP331003	Front Door		
2	APMDP381002	DP591		
2	APMDP420001	50 mm standard color		
2		EMV Card ReaderEthernet converter/Key injection Exit or Automatic Pay Station (LX/APL)		
2	800MKL	Secure VoIP Intercom Module		
2		MacKey Reader with control board for the City pre-paid parking cards		
		DP substation and additional hardware		
5	SG300-10PP	SG302-10P..Cisco SRW2008P-K9-NA 10-port 10/100 PoE Managed Switch		
1	A3851973	SmartRack 12U Wall Mount Rack Enclosure Cabinet with Plexiglass Front Door Insert		
1		DP Sub station Server with LCD monitor, Windows 7, 16GB of RAM, 2xSSD hard drives and RAID 1 configuration. All Licenses included.		
100	1326LSSMV-DC	HID Access Cards 26 Bit Prox Card		
		DP 2760 Barcode Hotel Encoder with RFID Readers		
1	VALONDP100001	Base Platform		
1	VALONDP181002	115 Volt Power Supply and Heater		
1	FCDP301003	TRAY STAND&MK3480 BARCODE		
1	VALHOTDP121009	Barcode printer TK302		
		RFID Hotel Reader - Cost per lane		
2		RFID Hotel Reader		

Continued on next page

Qty	Item	Description	Unit Price	Ext. Price
		INSTALLATION AND MOBILIZATION **HUB Installation** **-Install system and make all final terminations** **-Configure and commission system software** **-Train Operator users**		
1		HUB Installation		
		Total Short Street Garage Cost		$112,632.97
		Optional Monthly Lane Only - Not included in the total project cost		
1	ZLCDP100001	DP 1400 Lane Monthly Controler (Optional)		
1	ZLCDP171000	Housing color standard (Optional)		
1	ZLCDP181002	115 Volt Power Supply and Heater (Optional)		
1	ZLCDP185000	Standalone (Optional)		
1	ZLCDP191000	No Keypad (Optional)		
1	ZLCDP411001	DP2600 Entry/Exit control board (Optional)		
1	ZLCDP185002	TCP/IP (Optional)		
1	ZLCDP211001	HID Mini Prox 5365EGP04 (Optional)		
1	ZLCDP221000	No AVI (Optional)		
1	ZLCDP420001	50 mm standard color (Optional)		
1	800MKL	Secure VoIP Intercom Module (Optional)		
		HUB Model Tall Parking.Pro Barrier Gate		
1	HUB PRO-M-LC010H0	HUB Model Tall Parking.Pro Barrier Gate w/ 10' Microboom, Fixed Flange, Light Grey, Left Hand (Optional)		
1	KBB01c	Parts to Convert Straight to Art (8.2 ft clearance-bottom of boom to bottom of gate) (Optional)		
2		Sawcut Vehicle Detector Loop - Hook-up to barrier gate Includes: Sawcut, wire and seal approximately 8' x 6' (28 Linear ft plus lead in) (Optional)		
1		Total cost for the Optional Monthly Lane Only - Not included in the total project cost (Optional)	$5,795.00	$5,795.00
		Plaza Garage		
		ENTRY AND EXIT LANE EQUIPMENT		
		DP 5900-6 EMV Ready Barcode Entry Station		
2	LEDP100003	Entry Station Base platform EMV Ready (DP5900)		
2	LEDP111001B	LCD Graphic display EMV Ready		
2	800MKL	Secure VoIP Intercom Module		
2	LEDP211001	HID Mini Prox 5365EGP04		
2	LEDP231001	Single Ticket Issue Button		
2	LEDP231003	Intercom Button		

Continued on next page

Qty	Item	Description	Unit Price	Ext. Price
2	LEDP311001	Voice Announcer		
2	LXDP301001	2D scan Honeywell 3310g under f. panel		
		DP 5800-6 EMV Ready Barcode Exit Station		
1	LXDP100003	Exit Station Base platform EMV Ready (DP5800)		
1	LXDP111001	LCD graphic display		
1	LXDP121002	Receipt Printer Axiom - int mounted		
1	800MKL	Secure VoIP Intercom Module		
1	LXDP211001	HID Mini Prox 5365EGP04		
1	LXDP231002	Receipt/Cancel Button		
1	LXDP231003	Intercom Button		
2	LXDP301001	2D scan Honeywell 3310g under f. panel		
1	LXDP311001	Voice Announcer		
1		EMV Card ReaderEthernet converter/Key injection Exit or Automatic Pay Station (LX/APL)		
1		MacKey Reader with control board for the City pre-paid parking cards		
		DP 1400 Lane Controller for the Monthly Only Exit lane		
1	ZLCDP100001	DP 1400 Lane Monthly Controler		
1	ZLCDP171000	Housing color standard		
1	ZLCDP181002	115 Volt Power Supply and Heater		
1	ZLCDP185000	Standalone		
1	ZLCDP191000	No Keypad		
1	ZLCDP411001	DP2600 Entry/Exit control board		
1	ZLCDP185002	TCP/IP		
1	ZLCDP211001	HID Mini Prox 5365EGP04		
1	ZLCDP221000	No AVI		
1	ZLCDP420001	50 mm standard color		
1	800MKL	Secure VoIP Intercom Module		
		HUB Model Tall Parking.Pro Barrier Gate		
4	HUB PRO-M-LC010H0	HUB Model Tall Parking.Pro Barrier Gate w/ 10' Microboom, Fixed Flange, Light Grey, Left Hand		
4	KBB01c	Parts to Convert Straight to Art (8.2 ft clearance-bottom of boom to bottom of gate)		
8		Sawcut Vehicle Detector Loop - Hook-up to barrier gate Includes: Sawcut, wire and seal approximately 6' x 3' (18 Linear ft plus lead in)		
		PAY-ON-FOOT EQUIPMENT		
2	APMDP100001	Base platform		
2	APMDP111003	Color LCD 6,4 "		
2	APMDP181002	115 Volt Power Supply and Heater		
2	APMDP411002	BISCUIT + DP6020		
2	APMDP121002	Axiom Receipt Printer - int. Mounted		
2	APMDP131000	No Printing Unit		
2	APMDP141000	No Magnetic Head		
2	APMDP151005	No Magnetic Stripe Encoding		
2	APMDP171000	Housing color standard		

Continued on next page

Qty	Item	Description	Unit Price	Ext. Price
2	APMDP161000	Overlayr standard		
2	APMDP185002	TCP/IP		
2	APMDP191000	No Keypad		
2	APMDP201003	VoIP Secure Intercom 800M (Bracket Only)		
2	APMDP211000	No Proximity Reader		
2	APMDP231003	Intercom Button		
2	APMDP231004	Cancel Button		
2	APMDP231007	Lost Ticket Button		
2	APMDP251001	NRI Eagle		
2	APMDP261001	UBA10-SS 500 notes Bill Validator		
2	APMDP351002	MK4 Coin hopper - 3 Coins		
0	APMDP291001	No Notes Dispenser		
2	APMDP361000	No Fiscal Printer		
2	APMDP301001	Honey 3310g 2D scan under front panel		
2	APMDP311001	Voice Announcer		
2	APMDP321000	No IP Camera		
2	APMDP331003	Front Door		
2	APMDP381002	DP591		
2	APMDP420001	50 mm standard color		
2		EMV Card ReaderEthernet converter/Key injection Exit or Automatic Pay Station (LX/APL)		
2	800MKL	Secure VoIP Intercom Module		
2		MacKey Reader with control board for the City pre-paid parking cards		
		DP substation and additional hardware		
5	SG300-10PP	SG302-10P..Cisco SRW2008P-K9-NA 10-port 10/100 PoE Managed Switch		
1	A3851973	SmartRack 12U Wall Mount Rack Enclosure Cabinet with Plexiglass Front Door Insert		
1		DP Sub station Server with LCD monitor, Windows 7, 16GB of RAM, 2xSSD hard drives and RAID 1 configuration. All Licenses included.		
100	1326LSSMV-DC	HID Access Cards 26 Bit Prox Card		
		INSTALLATION AND MOBILIZATION **HUB Installation** **-Install system and make all final terminations** **-Configure and commission system software** **-Train Operator users**		
1		HUB Installation		
		Total Plaza Garage Cost		$97,506.17
		5th & Walnut Garage		
		ENTRY AND EXIT LANE EQUIPMENT		
		DP 5900-6 EMV Ready Barcode Entry Station		
1	LEDP100003	Entry Station Base platform EMV Ready (DP5900)		
1	LEDP111001B	LCD Graphic display EMV Ready		

Continued on next page

Qty	Item	Description	Unit Price	Ext. Price
1	800MKL	Secure VoIP Intercom Module		
1	LEDP211001	HID Mini Prox 5365EGP04		
1	LEDP231001	Single Ticket Issue Button		
1	LEDP231003	Intercom Button		
1	LEDP311001	Voice Announcer		
2	LXDP301001	2D scan Honeywell 3310g under f. panel		
		DP 5800-6 EMV Ready Barcode Exit Station		
1	LXDP100003	Exit Station Base platform EMV Ready (DP5800)		
1	LXDP111001	LCD graphic display		
1	LXDP121002	Receipt Printer Axiom - int mounted		
1	800MKL	Secure VoIP Intercom Module		
1	LXDP211001	HID Mini Prox 5365EGP04		
1	LXDP231002	Receipt/Cancel Button		
1	LXDP231003	Intercom Button		
2	LXDP301001	2D scan Honeywell 3310g under f. panel		
1	LXDP311001	Voice Announcer		
1		EMV Card ReaderEthernet converter/Key injection Exit or Automatic Pay Station (LX/APL)		
1		MacKey Reader with control board for the City pre-paid parking cards		
		HUB Model Tall Parking.Pro Barrier Gate		
2	HUB PRO-M-LC010H0	HUB Model Tall Parking.Pro Barrier Gate w/ 10' Microboom, Fixed Flange, Light Grey, Left Hand		
2	KBB01c	Parts to Convert Straight to Art (8.2 ft clearance-bottom of boom to bottom of gate)		
4		Sawcut Vehicle Detector Loop - Hook-up to barrier gate Includes: Sawcut, wire and seal approximately 8' x 6' (28 Linear ft plus lead in)		
		PAY-ON-FOOT EQUIPMENT		
2	APMDP100001	Base platform		
2	APMDP111003	Color LCD 6,4 "		
2	APMDP181002	115 Volt Power Supply and Heater		
2	APMDP411002	BISCUIT + DP6020		
2	APMDP121002	Axiom Receipt Printer - int. Mounted		
2	APMDP131000	No Printing Unit		
2	APMDP141000	No Magnetic Head		
2	APMDP151005	No Magnetic Stripe Encoding		
2	APMDP171000	Housing color standard		
2	APMDP161000	Overlayr standard		
2	APMDP185002	TCP/IP		
2	APMDP191000	No Keypad		
2	APMDP201003	VoIP Secure Intercom 800M (Bracket Only)		
2	APMDP211000	No Proximity Reader		
2	APMDP231003	Intercom Button		
2	APMDP231004	Cancel Button		
2	APMDP231007	Lost Ticket Button		
2	APMDP251001	NRI Eagle		
2	APMDP261001	UBA10-SS 500 notes Bill Validator		

Continued on next page

Qty	Item	Description	Unit Price	Ext. Price
2	APMDP351002	MK4 Coin hopper - 3 Coins		
0	APMDP291001	No Notes Dispenser		
2	APMDP361000	No Fiscal Printer		
2	APMDP301001	Honey 3310g 2D scan under front panel		
2	APMDP311001	Voice Announcer		
2	APMDP321000	No IP Camera		
2	APMDP331003	Front Door		
2	APMDP381002	DP591		
2	APMDP420001	50 mm standard color		
2		EMV Card ReaderEthernet converter/Key injection Exit or Automatic Pay Station (LX/APL)		
2	800MKL	Secure VoIP Intercom Module		
2		MacKey Reader with control board for the City pre-paid parking cards		
		DP substation and additional hardware		
5	SG300-10PP	SG302-10P..Cisco SRW2008P-K9-NA 10-port 10/100 PoE Managed Switch		
1	A3851973	SmartRack 12U Wall Mount Rack Enclosure Cabinet with Plexiglass Front Door Insert		
1		DP Sub station Server with LCD monitor, Windows 7, 16GB of RAM, 2xSSD hard drives and RAID 1 configuration. All Licenses included.		
100	1326LSSMV-DC	HID Access Cards 26 Bit Prox Card		
		INSTALLATION AND MOBILIZATION **HUB Installation** **-Install system and make all final terminations** **-Configure and commission system software** **-Train Operator users**		
1		HUB Installation		
		Total 5th & Walnut Garage Cost		$119,860.11
		Optional Monthly Lane Only - Not included in the total project cost		
1	ZLCDP100001	DP 1400 Lane Monthly Controler (Optional)		
1	ZLCDP171000	Housing color standard (Optional)		
1	ZLCDP181002	115 Volt Power Supply and Heater (Optional)		
1	ZLCDP185000	Standalone (Optional)		
1	ZLCDP191000	No Keypad (Optional)		
1	ZLCDP411001	DP2600 Entry/Exit control board (Optional)		
1	ZLCDP185002	TCP/IP (Optional)		
1	ZLCDP211001	HID Mini Prox 5365EGP04 (Optional)		
1	ZLCDP221000	No AVI (Optional)		
1	ZLCDP420001	50 mm standard color (Optional)		
1	800MKL	Secure VoIP Intercom Module (Optional)		
		HUB Model Tall Parking.Pro Barrier Gate		
1	HUB PRO-M-LC010H0	HUB Model Tall Parking.Pro Barrier Gate w/ 10' Microboom, Fixed Flange, Light Grey, Left Hand (Optional)		

Continued on next page

Qty	Item	Description	Unit Price	Ext. Price
1	KBB01c	Parts to Convert Straight to Art (8.2 ft clearance-bottom of boom to bottom of gate) (Optional)		
2		Sawcut Vehicle Detector Loop - Hook-up to barrier gate Includes: Sawcut, wire and seal approximately 8' x 6' (28 Linear ft plus lead in) (Optional)		
1		Total cost for the Optional Monthly Lane Only - Not included in the total project cost (Optional)	$5,795.00	$5,795.00
		6th & Cherry Garage		
		ENTRY AND EXIT LANE EQUIPMENT		
		DP 5900-6 EMV Ready Barcode Entry Station		
1	LEDP100003	Entry Station Base platform EMV Ready (DP5900)		
1	LEDP111001B	LCD Graphic display EMV Ready		
1	800MKL	Secure VoIP Intercom Module		
1	LEDP211001	HID Mini Prox 5365EGP04		
1	LEDP231001	Single Ticket Issue Button		
1	LEDP231003	Intercom Button		
1	LEDP311001	Voice Announcer		
2	LXDP301001	2D scan Honeywell 3310g under f. panel		
		DP 5800-6 EMV Ready Barcode Exit Station		
1	LXDP100003	Exit Station Base platform EMV Ready (DP5800)		
1	LXDP111001	LCD graphic display		
1	LXDP121002	Receipt Printer Axiom - int mounted		
1	800MKL	Secure VoIP Intercom Module		
1	LXDP211001	HID Mini Prox 5365EGP04		
1	LXDP231002	Receipt/Cancel Button		
1	LXDP231003	Intercom Button		
2	LXDP301001	2D scan Honeywell 3310g under f. panel		
1	LXDP311001	Voice Announcer		
1		EMV Card ReaderEthernet converter/Key injection Exit or Automatic Pay Station (LX/APL)		
1		MacKey Reader with control board for the City pre-paid parking cards		
		HUB Model Tall Parking.Pro Barrier Gate		
2	HUB PRO-M-LC010H0	HUB Model Tall Parking.Pro Barrier Gate w/ 10' Microboom, Fixed Flange, Light Grey, Left Hand		
2	KBB01c	Parts to Convert Straight to Art (8.2 ft clearance-bottom of boom to bottom of gate)		
4		Sawcut Vehicle Detector Loop - Hook-up to barrier gate Includes: Sawcut, wire and seal approximately 6' x 3' (18 Linear ft plus lead in) (Optional)		
		PAY-ON-FOOT EQUIPMENT		
2	APMDP100001	Base platform		
2	APMDP111003	Color LCD 6,4 "		
2	APMDP181002	115 Volt Power Supply and Heater		
2	APMDP411002	BISCUIT + DP6020		
2	APMDP121002	Axiom Receipt Printer - int. Mounted		

Continued on next page

Qty	Item	Description	Unit Price	Ext. Price
2	APMDP131000	No Printing Unit		
2	APMDP141000	No Magnetic Head		
2	APMDP151005	No Magnetic Stripe Encoding		
2	APMDP171000	Housing color standard		
2	APMDP161000	Overlayr standard		
2	APMDP185002	TCP/IP		
2	APMDP191000	No Keypad		
2	APMDP201003	VoIP Secure Intercom 800M (Bracket Only)		
2	APMDP211000	No Proximity Reader		
2	APMDP231003	Intercom Button		
2	APMDP231004	Cancel Button		
2	APMDP231007	Lost Ticket Button		
2	APMDP251001	NRI Eagle		
2	APMDP261001	UBA10-SS 500 notes Bill Validator		
2	APMDP351002	MK4 Coin hopper - 3 Coins		
0	APMDP291001	No Notes Dispenser		
2	APMDP361000	No Fiscal Printer		
2	APMDP301001	Honey 3310g 2D scan under front panel		
2	APMDP311001	Voice Announcer		
2	APMDP321000	No IP Camera		
2	APMDP331003	Front Door		
2	APMDP381002	DP591		
2	APMDP420001	50 mm standard color		
2		EMV Card ReaderEthernet converter/Key injection Exit or Automatic Pay Station (LX/APL)		
2	800MKL	Secure VoIP Intercom Module		
2		MacKey Reader with control board for the City pre-paid parking cards		
		DP substation and additional hardware		
5	SG300-10PP	SG302-10P..Cisco SRW2008P-K9-NA 10-port 10/100 PoE Managed Switch		
1	A3851973	SmartRack 12U Wall Mount Rack Enclosure Cabinet with Plexiglass Front Door Insert		
1		DP Sub station Server with LCD monitor, Windows 7, 16GB of RAM, 2xSSD hard drives and RAID 1 configuration. All Licenses included.		
100	1326LSSMV-DC	HID Access Cards 26 Bit Prox Card		
		INSTALLATION AND MOBILIZATION **HUB Installation** **-Install system and make all final terminations** **-Configure and commission system software** **-Train Operator users**		
1		HUB Installation		
		Total 6th & Cherry Garage Cost		$114,664.02
		Optional Monthly Lane Only - Not included in the total project cost		
1	ZLCDP100001	DP 1400 Lane Monthly Controler (Optional)		

Continued on next page

Qty	Item	Description	Unit Price	Ext. Price
1	ZLCDP171000	Housing color standard (Optional)		
1	ZLCDP181002	115 Volt Power Supply and Heater (Optional)		
1	ZLCDP185000	Standalone (Optional)		
1	ZLCDP191000	No Keypad (Optional)		
1	ZLCDP411001	DP2600 Entry/Exit control board (Optional)		
1	ZLCDP185002	TCP/IP (Optional)		
1	ZLCDP211001	HID Mini Prox 5365EGP04 (Optional)		
1	ZLCDP221000	No AVI (Optional)		
1	ZLCDP420001	50 mm standard color (Optional)		
1	800MKL	Secure VoIP Intercom Module (Optional)		
		HUB Model Tall Parking.Pro Barrier Gate		
1	HUB PRO-M-LC010H0	HUB Model Tall Parking.Pro Barrier Gate w/ 10' Microboom, Fixed Flange, Light Grey, Left Hand (Optional)		
1	KBB01c	Parts to Convert Straight to Art (8.2 ft clearance-bottom of boom to bottom of gate) (Optional)		
2		Sawcut Vehicle Detector Loop - Hook-up to barrier gate Includes: Sawcut, wire and seal approximately 8' x 6' (28 Linear ft plus lead in) (Optional)		
1		Total cost for the Optional Monthly Lane Only - Not included in the total project cost (Optional)	$5,795.00	$5,795.00
		10th & Cherry Garage Garage		
		ENTRY AND EXIT LANE EQUIPMENT		
		DP 5900-6 EMV Ready Barcode Entry Station		
2	LEDP100003	Entry Station Base platform EMV Ready (DP5900)		
2	LEDP111001B	LCD Graphic display EMV Ready		
2	800MKL	Secure VoIP Intercom Module		
2	LEDP211001	HID Mini Prox 5365EGP04		
2	LEDP231001	Single Ticket Issue Button		
2	LEDP231003	Intercom Button		
2	LEDP311001	Voice Announcer		
4	LXDP301001	2D scan Honeywell 3310g under f. panel		
		DP 5800-6 EMV Ready Barcode Exit Station		
1	LXDP100003	Exit Station Base platform EMV Ready (DP5800)		
1	LXDP111001	LCD graphic display		
1	LXDP121002	Receipt Printer Axiom - int mounted		
1	800MKL	Secure VoIP Intercom Module		
1	LXDP211001	HID Mini Prox 5365EGP04		
1	LXDP231002	Receipt/Cancel Button		
1	LXDP231003	Intercom Button		
2	LXDP301001	2D scan Honeywell 3310g under f. panel		
1	LXDP311001	Voice Announcer		

Continued on next page

Qty	Item	Description	Unit Price	Ext. Price
1		EMV Card ReaderEthernet converter/Key injection Exit or Automatic Pay Station (LX/APL)		
1		MacKey Reader with control board for the City pre-paid parking cards		
		DP 1400 Lane Controller for the Monthly Only Exit lane		
1	ZLCDP100001	DP 1400 Lane Monthly Controler		
1	ZLCDP171000	Housing color standard		
1	ZLCDP181002	115 Volt Power Supply and Heater		
1	ZLCDP185000	Standalone		
1	ZLCDP191000	No Keypad		
1	ZLCDP411001	DP2600 Entry/Exit control board		
1	ZLCDP185002	TCP/IP		
1	ZLCDP211001	HID Mini Prox 5365EGP04		
1	ZLCDP221000	No AVI		
1	ZLCDP420001	50 mm standard color		
1	800MKL	Secure VoIP Intercom Module		
		HUB Model Tall Parking.Pro Barrier Gate		
4	HUB PRO-M-LC010H0	HUB Model Tall Parking.Pro Barrier Gate w/ 10' Microboom, Fixed Flange, Light Grey, Left Hand		
4	KBB01c	Parts to Convert Straight to Art (8.2 ft clearance-bottom of boom to bottom of gate)		
8		Sawcut Vehicle Detector Loop - Hook-up to barrier gate Includes: Sawcut, wire and seal approximately 6' x 3' (18 Linear ft plus lead in) (Optional)		
		PAY-ON-FOOT EQUIPMENT		
2	APMDP100001	Base platform		
2	APMDP111003	Color LCD 6,4 "		
2	APMDP181002	115 Volt Power Supply and Heater		
2	APMDP411002	BISCUIT + DP6020		
2	APMDP121002	Axiom Receipt Printer - int. Mounted		
2	APMDP131000	No Printing Unit		
2	APMDP141000	No Magnetic Head		
2	APMDP151005	No Magnetic Stripe Encoding		
2	APMDP171000	Housing color standard		
2	APMDP161000	Overlayr standard		
2	APMDP185002	TCP/IP		
2	APMDP191000	No Keypad		
2	APMDP201003	VoIP Secure Intercom 800M (Bracket Only)		
2	APMDP211000	No Proximity Reader		
2	APMDP231003	Intercom Button		
2	APMDP231004	Cancel Button		
2	APMDP231007	Lost Ticket Button		
2	APMDP251001	NRI Eagle		
2	APMDP261001	UBA10-SS 500 notes Bill Validator		
2	APMDP351002	MK4 Coin hopper - 3 Coins		
0	APMDP291001	No Notes Dispenser		
2	APMDP361000	No Fiscal Printer		

Continued on next page

Qty	Item	Description	Unit Price	Ext. Price
2	APMDP301001	Honey 3310g 2D scan under front panel		
2	APMDP311001	Voice Announcer		
2	APMDP321000	No IP Camera		
2	APMDP331003	Front Door		
2	APMDP381002	DP591		
2	APMDP420001	50 mm standard color		
2		EMV Card ReaderEthernet converter/Key injection Exit or Automatic Pay Station (LX/APL)		
2	800MKL	Secure VoIP Intercom Module		
2		MacKey Reader with control board for the City pre-paid parking cards		
		DP substation and additional hardware		
5	SG300-10PP	SG302-10P..Cisco SRW2008P-K9-NA 10-port 10/100 PoE Managed Switch		
1	A3851973	SmartRack 12U Wall Mount Rack Enclosure Cabinet with Plexiglass Front Door Insert		
1		DP Sub station Server with LCD monitor, Windows 7, 16GB of RAM, 2xSSD hard drives and RAID 1 configuration. All Licenses included.		
100	1326LSSMV-DC	HID Access Cards 26 Bit Prox Card		
		INSTALLATION AND MOBILIZATION **HUB Installation** **-Install system and make all final terminations** **-Configure and commission system software** **-Train Operator users**		
1		HUB Installation		
		Total 10th & Cherry Garage Cost		$92,408.10
		8th & Cherry Garage		
		ENTRY AND EXIT LANE EQUIPMENT		
		DP 5900-6 EMV Ready Barcode Entry Station		
1	LEDP100003	Entry Station Base platform EMV Ready (DP5900)		
1	LEDP111001B	LCD Graphic display EMV Ready		
1	800MKL	Secure VoIP Intercom Module		
1	LEDP211001	HID Mini Prox 5365EGP04		
1	LEDP231001	Single Ticket Issue Button		
1	LEDP231003	Intercom Button		
1	LEDP311001	Voice Announcer		
2	LXDP301001	2D scan Honeywell 3310g under f. panel		
		DP 5800-6 EMV Ready Barcode Exit Station		
1	LXDP100003	Exit Station Base platform EMV Ready (DP5800)		
1	LXDP111001	LCD graphic display		
1	LXDP121002	Receipt Printer Axiom - int mounted		

Continued on next page

Qty	Item	Description	Unit Price	Ext. Price
1	800MKL	Secure VoIP Intercom Module		
1	LXDP211001	HID Mini Prox 5365EGP04		
1	LXDP231002	Receipt/Cancel Button		
1	LXDP231003	Intercom Button		
2	LXDP301001	2D scan Honeywell 3310g under f. panel		
1	LXDP311001	Voice Announcer		
1		EMV Card ReaderEthernet converter/Key injection Exit or Automatic Pay Station (LX/APL)		
1		MacKey Reader with control board for the City pre-paid parking cards		
		HUB Model Tall Parking.Pro Barrier Gate		
2	HUB PRO-M-LC010H0	HUB Model Tall Parking.Pro Barrier Gate w/ 10' Microboom, Fixed Flange, Light Grey, Left Hand		
2	KBB01c	Parts to Convert Straight to Art (8.2 ft clearance-bottom of boom to bottom of gate)		
4		Sawcut Vehicle Detector Loop - Hook-up to barrier gate Includes: Sawcut, wire and seal approximately 6' x 3' (18 Linear ft plus lead in)		
		PAY-ON-FOOT EQUIPMENT		
2	APMDP100001	Base platform		
2	APMDP111003	Color LCD 6,4 "		
2	APMDP181002	115 Volt Power Supply and Heater		
2	APMDP411002	BISCUIT + DP6020		
2	APMDP121002	Axiom Receipt Printer - Int. Mounted		
2	APMDP131000	No Printing Unit		
2	APMDP141000	No Magnetic Head		
2	APMDP151005	No Magnetic Stripe Encoding		
2	APMDP171000	Housing color standard		
2	APMDP161000	Overlayr standard		
2	APMDP185002	TCP/IP		
2	APMDP191000	No Keypad		
2	APMDP201003	VoIP Secure Intercom 800M (Bracket Only)		
2	APMDP211000	No Proximity Reader		
2	APMDP231003	Intercom Button		
2	APMDP231004	Cancel Button		
2	APMDP231007	Lost Ticket Button		
2	APMDP251001	NRI Eagle		
2	APMDP261001	UBA10-SS 500 notes Bill Validator		
2	APMDP351002	MK4 Coin hopper - 3 Coins		
0	APMDP291001	No Notes Dispenser		
2	APMDP361000	No Fiscal Printer		
2	APMDP301001	Honey 3310g 2D scan under front panel		
2	APMDP311001	Voice Announcer		
2	APMDP321000	No IP Camera		
2	APMDP331003	Front Door		
2	APMDP381002	DP591		
2	APMDP420001	50 mm standard color		
2		EMV Card ReaderEthernet converter/Key injection Exit or Automatic Pay Station (LX/APL)		
2	800MKL	Secure VoIP Intercom Module		
2		MacKey Reader with control board for the City pre-paid parking cards		

Continued on next page

Qty	Item	Description	Unit Price	Ext. Price
		DP substation and additional hardware		
6	SG300-10PP	SG302-10P Cisco SRW208P-K9-NA 10-port 10/100 PoE Managed Switch		
1	A3851973	SmartRack 12U Wall Mount Rack Enclosure Cabinet with Plexiglass Front Door Insert		
1		DP Sub station Server with LCD monitor, **Windows 7, 16GB of RAM, 2xSSD hard drives** and RAID 1 configuration. All Licenses included.		
100	1326LSSMV-DC	HID Access Cards 26 Bit Prox Card		
		INSTALLATION AND MOBILIZATION **HUB Installation** **-Install system and make all final terminations** **-Configure and commission system software** **-Train Operator users**		
1		HUB Installation		
		Total 8th & Cherry Garage Cost		$106,005.12
		Running SubTotal		$774,645.34

TERMS & CONDITIONS

This quotation covers costs that **are** presently ascertainable. HUB Parking Technology reserves the right to amend this quotation if any unforeseen work is found to be required during the execution of the above scope. This quotation is valid for 60 days.

SubTotal	$774,645.34
Tax	$0.00
Shipping	$2,500.00
Total	$777,145.34

All payments shall be sent to:
HUB PARKING TECHNOLOGY USA INC.
555 Keystone Drive
Warrendale, PA 15086

APPROVED

20-10-2016

Authorized Signature Date

JOHN D. LOVELL CEO

Name Title

APPROVED

Authorized Signature Date

Name Title

Terms and Conditions

These terms and conditions ("T&C's") apply to the sale and licensing of the hardware and related software (collectively, "Equipment") identified on this price quote ("Quote") issued by HUB Parking Technology USA, Inc. ("HUB") to the buyer identified in the Quote ("Buyer").

1. Application of Terms and Conditions. Any purchase order issued by Buyer ("PO") shall be consistent with these T&C's and shall be firm and not subject to cancelation, suspension or modification by Buyer. All sales and licensing of Equipment shall be governed solely and exclusively by these T&C's. Buyer is hereby deemed to accept these T&C's and to waive its own general terms and conditions of purchase, whether set forth in a PO or any other document issued or referenced by Buyer (collectively, "Buyer Documentation"). In the event of any conflict between these T&C's and those set forth in any Buyer Documentation, the former shall control. No modification or supplementation of, or addition to, these T&C's shall result from the issuance, receipt, acknowledgment or acceptance by HUB of any Buyer Documentation or otherwise.

2. Pricing. The pricing set forth in this Quote is valid for sixty (60) days from this date. Project cancellation for any reason after acceptance of this Quote may be subject to 25% restocking fee for Equipment components or devices. Payment terms are 50% due for orders, 40% due at delivery and 10% after final installation. All invoices issued by HUB shall be paid within thirty (30) days from the invoice date.

3. Warranties; Limitation of Liability. HUB warrants the Equipment to be free from defects in materials and workmanship for a period of two (2) years following the date of final installation. HUB agrees to repair or replace, at HUB's expense, any defective Equipment for two (2) years from date of final installation. Evidence of vandalism, unauthorized modifications, and connections to improper power source will void this warranty. This warranty extends only to the original purchase, and does not cover replacements. In case of failure due to defective material or workmanship during the two (2) year warranty period, the Equipment will be repaired or replaced at no charge. There is no provision in this warranty for labor outside HUB and HUB's obligation under this warranty is limited to servicing and replacing defective parts or workmanship. HUB MAKES NO OTHER REPRESENTATION OR WARRANTY OF ANY KIND, EXPRESS OR IMPLIED, REGARDING THE EQUIPMENT, INCLUDING, BUT NOT LIMITED TO, ANY WARRANTIES OF MERCHANTABILITY OR FITNESS FOR A PARTICULAR PURPOSE. IN NO EVENT SHALL HUB BE LIABLE FOR LOSS OF PROFITS, OR ANY OTHER SPECIAL, INCIDENTAL, INDIRECT, OR CONSEQUENTIAL DAMAGES, ARISING OUT OF OR RELATED TO THIS QUOTE OR THE USE OR PERFORMANCE OF THE EQUIPMENT, HOWEVER CAUSED AND ON ANY THEORY OF LIABILITY, WHETHER IN AN ACTION FOR CONTRACT, TORT OR OTHERWISE, AND WHETHER OR NOT HUB HAS BEEN ADVISED OF THE POSSIBILITY OF SUCH DAMAGES.

4. Software License. Any and all software embedded in any hardware included among the Equipment, or that otherwise forms part of the Equipment, is licensed and not sold to Buyer. Buyer shall not attempt to reverse engineer or decompile any such software.

5. Indemnification. Buyer agrees to indemnify, defend and hold harmless HUB from and against any and all damages, claims, liability, costs, losses and expenses (including attorneys' fees) that HUB may incur to the extent caused by any misconduct, unlawful activity or negligent act or omission of Buyer or Buyer's failure to perform any acts agreed upon by the parties in connection with this Quote.

6. General. The Quote and these T&C's shall be governed by and construed in accordance with the laws of the State of Pennsylvania, without application of any choice of law rules. The parties consent to the jurisdiction of the state and federal courts of the State of Pennsylvania. If any provision of these T&C's is deemed invalid or unenforceable, such provision shall be modified to the extent necessary to render it valid and enforceable. If such modification is not possible, the provision in question shall be deemed stricken and the remainder of these T&C's shall continue in full force and effect. Buyer shall not assign or delegate any of its rights or obligations arising under the Quote or the T&C's, and any such purported assignment or delegation shall be void. Except for a failure to make payments when due, neither party shall be liable for any delay in performance or any failure to perform any obligation hereunder which arises from any contingency beyond that party's reasonable control, including, but not limited to, acts of God, governmental orders or restrictions, war, threat of war, riot, strikes, fires, floods, transportation delays, product shortages or any failure of delivery by suppliers, whether such contingency was known or contemplated to be possible at the time the Quote is made. If any such contingency arises and continues for a period of more than sixty (60) days, then either party may terminate the Quote. Any notice or demand permitted or required hereunder shall be deemed made or given (i) seven (7) days after deposit in the postal system with first class airmail postage prepaid, (ii) four (4) days after delivery to a reputable international courier service, addressed to a party at its address set forth in the Quote, or such other address as such party may give by written notice hereunder, or (iii) when delivered electronically to a valid email address with receipt acknowledgment. The Quote and these T&C's supersede all prior agreements, arrangements and understanding relating to the subject matter of the Quote, and sets forth the parties' entire agreement and understanding in respect of the transaction contemplated hereunder. Provisions of the Quote or of these T&C's may be waived, amended or canceled only by a document signed by both parties.

MME Inc.
MID MISSOURI ELECTRIC

MME
1917 Paris Road
Columbia, Mo. 65201
573 875 1545 Fax 753 442 5673

Larry Slates
larry@midmissourielectric.com
Scott Wallace
Scott@midmissourielectic.com

10/19/16

City of Columbia, Mo. Parking Garages

Attn: Lazar Milanov
Re: Electrical

Material and labor to install the electrical for Garage entrance & exit stations
Provide labor at the current Boone County wage determination (#23) provided
All the following prices will be honored through 12/31/2017, after that time period there will be a minimum of a 3% price increase for increased costs
Demolition of the exiting entrance /exit operators
Installation of the new operators
Installation of the loop sensors (sensors provided by others)
Power circuitry to control/data room (conduit & wire) per specifications
Data wiring (conduit & wire) per specifications
New Concrete Islands
Concrete cutting & patching will be by others

5th & Walnut	$24,000
6th & Cherry	21,000
8th & Cherry	15,000
8th & Walnut	16,000
10th & Cherry	14,500
Short Street	12,500

Larry Slates

Section 5: Warranty

Describe any warranty period you offer on your products.

HUB Response:

HUB Parking Technology USA, Inc. warrants its product to be free of defects in materials and workmanship for a period of two (2) years parts and labor from the date of substantial completion. During the warranty period, HUB Parking Technology will cover all of the parts, emergency calls and remote software and hardware support.

HUB Parking Technology USA, Inc. (HUB) warrants and represents that:

- *its services and/or goods shall be performed and/or provided in a professional and work-like manner in accordance with applicable industry standards.*
- *all Hardware and Equipment will be new and of original manufacturer.*
- *(a) it has clear and marketable title to any Equipment and Hardware; (b) the right to license all Vendor Software; and (c) the right to install Commercial Software provided to Customer in connection with the Agreement.*
- *under normal use and service, and while properly maintained, the System will operate in accordance with the Functional and System Specifications, requirements and standards contained in this Agreement and will continue to do so through the Warranty Period.*

HUB's warranty excludes remedy for damage or defect caused by abuse or misuse, modifications not made by HUB, improper or insufficient maintenance, improper operation, normal wear and tear and normal usage. Customer's sole remedy for breach of this limited warranty shall be the repair and/or replacement of the materials and equipment.

The above stated LIMITED warranty is exclusive and in lieu of any warranty of merchantability, fitness for particular purpose, or any other warranty, whether expressed or implied. ALL OTHER WARRANTIES ARE HEREBY DISCLAIMED.

Section 6: Experience

A. Describe the experience of your implementation and support team, including time with the company, years of experience with the proposed system, and relevant certifications held by the team.

HUB Response:

The proposed Project Managers for this project are Lazar Milanov and Mike Staesche. Their qualifications and experience are described below along with other key personnel that will be involved in this project.

Project Management/Installation Team:

Lazar Milanov – *Regional Account Manager and primary client contact. He has been with HUB Parking Technology USA, Inc. since 2009. He has extensive experience and knowledge of parking management and operations. Over 30 HUB Installations*

Don Wilson *- Project Manager. He will coordinate the installation process with the client and supervise and assist throughout the entire process. He has been with HUB Parking Technology USA, Inc. since 2000. Over 50 HUB installation.* Don earned his PMP certification in May of 2006 and is a PMP in good standing

Mike Staesche *– Assistant Project Manager and main contact for the project installation. He will coordinate the installation process with the client and supervise and assist throughout the entire process. He has been with HUB Parking Technology USA, Inc. since 2013. Over 12 HUB installation.*

Ivan Pantchev *– Service and Installation Supervisor. Ivan has over 15 years of experience in installing and servicing parking systems. He will provide remote and onsite software setup and also train the parking and airport staff. He has been with HUB Parking Technology USA, Inc. since 2009.*
Over 40 HUB installation

Razvigor Andreev *– Software set up, training and post installation support. He will provide remote and onsite software setup and also train the parking and airport staff. He has been with HUB Parking Technology USA, Inc. since 2009.*
Over 30 HUB installation

B. Describe your firm's experience with projects of similar scope and size. Include project name, total sale amount, distance from City of Columbia, and a customer contact that we may reference.

HUB Response:

References

Name of Business: ***City Of Chicago / Millennium Garages***

Total Sales Amount:: ***$1,100,000.00***

Contact Person: *Jim Healy / SP Plus Regional Manager*

Telephone Number: *312-274-2027*

Email Address: *jhealy@spplus.com*

Project Description: *The project comprises four (4) garages which include 24 Entry Stations, 26 Exit Stations, 4 Fee Computers, 41 Pay-on-Foot Pay stations, 50 Gates, HUB Facility Management System Software and Hardware, Integration with Third Party Web Reservation systems (Park Mobil ,Spot Hero ,Park Whiz, Parking Panda), Integration with SP+ Account Receivable system (CARS)*

Name of Business: ***New Haven Parking Authority***

Total Sales Amount:: ***$2,000,000.00***

Contact Person: *Brian Seholm*

Telephone Number: *203-946-5917*

Email Address: *bseholm@nhparking.com*

Project Description: *The project comprises eight (8) garages which include 20 Entry Stations, 20 Exit Stations, 17 Fee Computers, 6 Pay-on-Foot Paystations, 45 Gates, HUB Facility Management System Software and Hardware, Variable Message Signs, Parking Guidance System Server and Software*

Name of Business: ***New Brunswick Parking Authority***

Total Sales Amount:: ***$1,900,000.00***

Contact Person: *Harry J. Delgado*

Telephone Number: *732-545-3118 ext. 112*

Email Address: *hdelgado@njnbpa.org*

Project Description: *The project comprises seven (7) parking decks which include 31 lanes, 15 Entry Stations, 16 Exit Stations, 26 Pay-on-Foot Pay stations, Facility Management System Software and Hardware*

C. Describe your firm's history and experience in the industry. Include financial statements and any other information that would assist the City of Columbia in assessing your firm's financial stability. Note that RFP submittals are public records. If the offeror would prefer this information remain confidential, financial statements may be provided during the short-list interview stage. Note that financial stability is a key factor to success in this long-term project so it must be provided at some point.

HUB Response:

HUB Parking Technology is the FAAC Group Business Unit that develops, manufactures, installs and provides after-sales services for Parking Revenue Control Systems branded ZEAG and DATAPARK in the United States. HUB Parking Technology delivers the flexibility, professional expertise and close personal service of a local company, together with all the capabilities, and network strength of a global player. We are represented in North and South America, Europe, Africa, the Middle East, Asia and Australia.

Founded in 1965, FAAC built a company on business integrity, product innovation, and service after-the-sale. HUB Parking Technology was formed by successfully bringing together equipment manufacturers, ***DATAPARK*** *(founded 1981),* ***ZEAG*** *(founded in 1971),* ***CTR Parking*** *(founded in 1992) and* ***Magnetic Autocontrol*** *to form one of the top parking equipment providers in the U.S.*

HUB Parking Technology maintains offices in ***St. Louis MO****, Chicago, Minneapolis, Boston, Cincinnati, Pittsburgh, Atlanta, Baltimore, Los Angeles, San Leandro, Philadelphia, Fort Lauderdale, and Washington DC. Our U.S. corporate headquarters is located in Warrendale, PA (Pittsburgh).*

HUB Parking Technology has the financial stability and sufficient resources to successfully complete the City of Columbia PARCS contract.

Company financial reports are available upon request and will be provided during the short-list interview stage.

Section 7: Bid Bond

HUB Response: Attached

EXHIBIT E

BID BOND
(Bid Security)

KNOW ALL MEN BY THESE PRESENTS, that we, HUB Parking Technology USA, Inc. **as PRINCIPAL and** Great American Insurance Company **as SURETY, are held and firmly bound unto the City of** Columbia, Missouri, ("City") in the sum of Five Percent The Amount Of Bid----- **Dollars** ($ 5%) ("Bid Security"), for the payment of which sum well and truly to be made, we hereby jointly and severally bind ourselves, our heirs, executors, successors, and assigns, firmly by these presents.

THE CONDITION OF THIS OBLIGATION IS SUCH, that whereas Principal has submitted a bid dated October 7, **, 2016, to enter into a contract in writing for the** Job Title-RFP5/2016 Parking Unility Software **Project;**

Description: Installing Zeag PARC System with ZMS software and Magnetic gates.

NOW, **THEREFORE,**

IF said Bid shall be rejected, or in the alternate,

IF Principal shall not withdraw the bid within the period specified therein after the opening of bids, or, if no period be specified, within ninety (90) days after the bid opening, or in the alternate,

IF said Bid shall be accepted and the Principal shall execute and deliver a contract in the form of contract attached hereto, properly competed with all attachments and requirements pertaining thereto, and shall furnish a bond for the faithful performance of said contract, and for the payment of all persons performing labor or furnishing materials in connection therewith, shall in all other respects perform the agreement created by the acceptance of said Bid within twenty (20) days after such Contract Documents are presented to Principal for signature, or in the alternate,

In the event of the withdrawal of the Bid within the period specified, or the failure to enter into such contract within the time specified, then the Bid Security shall immediately become due and payable and forfeited to the City as liquidated damages. Principal and Surety agree that this is a fair and reasonable approximation of the actual damages incurred by the City for the Principal's failure to honor its bid and that the liquidated damages in this section are not penal in nature but rather the parties' attempt to fairly quantify the actual damages incurred by the City for the Principal's refusal to honor its bid.

The Surety, for value received, hereby stipulates and agrees that the obligations of said Surety and its bond shall be in no way impaired or affected by the extension of the time within which the City may accept such Bid; and said Surety does hereby waive notice of any such extension.

IN WITNESS WHEREOF, the Principal and Surety have hereunto set their hands and seals, and such of them as or corporations have caused their corporate seals to be hereto affixed and these presents to be signed by their proper officers, the day and year set forth herein.

HUB Parking Technology USA, Inc.

PRINCIPAL

By: _____

(Signature)

Printed Name: _____

Title: _____

Date: October 7, 2016

I hereby certify that (1) I have authority to execute this document on behalf of Surety; (2) Surety is named in the current list of "Companies Holding Certificates of Authority as Acceptable Reinsuring Companies": as published in Circular 570 (most current revision) by the Financial Management Service, Surety Bond Branch, U.S. Department of the Treasury; and (3) Surety is duly licensed to issue bonds in the State of Missouri and in the jurisdiction in which the Project is located.

Great American Insurance Company

SURETY

By: _____

(Signature)

Printed Name: James C. Carlins

Title: Attorney-In-Fact

Date: October 7, 2016

GREAT AMERICAN INSURANCE COMPANY®

Administrative Office: 301 E 4TH STREET • CINCINNATI, OHIO 45202 • 513-369-5000 • FAX 513-723-2740

The number of persons authorized by
this power of attorney is not more than FOUR

No. 0 18477

POWER OF ATTORNEY

KNOW ALL MEN BY THESE PRESENTS: That the GREAT AMERICAN INSURANCE COMPANY, a corporation organized and existing under and by virtue of the laws of the State of Ohio, does hereby nominate, constitute and appoint the person or persons named below, each individually if more than one is named, its true and lawful attorney-in-fact, for it and in its name, place and stead to execute on behalf of the said Company, as surety, any and all bonds, undertakings and contracts of suretyship, or other written obligations in the nature thereof; provided that the liability of the said Company on any such bond, undertaking or contract of suretyship executed under this authority shall not exceed the limit stated below.

Name	Address	Limit of Power
JAMES C. CARLINS	ALL OF	ALL
ANTHONY P. LEKSE	PITTSBURGH, PENNSYLVANIA	$75,000,000
RICHARD J. TAYLOR		
CHRISTOPHER J. RUCK		

This Power of Attorney revokes all previous powers issued on behalf of the attorney(s)-in-fact named above.

IN WITNESS WHEREOF the GREAT AMERICAN INSURANCE COMPANY has caused these presents to be signed and attested by its appropriate officers and its corporate seal hereunto affixed this 21ST day of JULY , 2011 .

Attest GREAT AMERICAN INSURANCE COMPANY

Assistant Secretary

Divisional Senior Vice President

DAVID C. KITCHIN (877-377-2405)

STATE OF OHIO, COUNTY OF HAMILTON - ss:

On this 21ST day of JULY , 2011 , before me personally appeared DAVID C. KITCHIN, to me known, being duly sworn, deposes and says that he resides in Cincinnati, Ohio, that he is a Divisional Senior Vice President of the Bond Division of Great American Insurance Company, the Company described in and which executed the above instrument; that he knows the seal of the said Company; that the seal affixed to the said instrument is such corporate seal; that it was so affixed by authority of his office under the By-Laws of said Company, and that he signed his name thereto by like authority.

KAREN L. GROSHEIM
NOTARY PUBLIC, STATE OF OHIO
MY COMMISSION EXPIRES 02-20-16

This Power of Attorney is granted by authority of the following resolutions adopted by the Board of Directors of Great American Insurance Company by unanimous written consent dated June 9, 2008.

RESOLVED: That the Divisional President, the several Divisional Senior Vice Presidents, Divisional Vice Presidents and Divisonal Assistant Vice Presidents, or any one of them, be and hereby is authorized, from time to time, to appoint one or more Attorneys-in-Fact to execute on behalf of the Company, as surety, any and all bonds, undertakings and contracts of suretyship, or other written obligations in the nature thereof; to prescribe their respective duties and the respective limits of their authority; and to revoke any such appointment at any time.

RESOLVED FURTHER: That the Company seal and the signature of any of the aforesaid officers and any Secretary or Assistant Secretary of the Company may be affixed by facsimile to any power of attorney or certificate of either given for the execution of any bond, undertaking, contract of suretyship, or other written obligation in the nature thereof, such signature and seal when so used being hereby adopted by the Company as the original signature of such officer and the original seal of the Company, to be valid and binding upon the Company with the same force and effect as though manually affixed.

CERTIFICATION

I, STEPHEN C. BERAHA, Assistant Secretary of Great American Insurance Company, do hereby certify that the foregoing Power of Attorney and the Resolutions of the Board of Directors of June 9, 2008 have not been revoked and are now in full force and effect.

Signed and sealed this 7th day of October, 2016 .

Assistant Secretary

S1029AC (4/11)

SURETY POWER OF ATTORNEY MUST BE ATTACHED

Section 8: W-9 Submission

Form **W-9**
(Rev. December 2014)
Department of the Treasury
Internal Revenue Service

Request for Taxpayer Identification Number and Certification

Give Form to the requester. Do not send to the IRS.

Print or type
See Specific Instructions on page 2.

1 Name (as shown on your income tax return). Name is required on this line; do not leave this line blank.
HUB Parking Technology USA Inc

2 Business name/disregarded entity name, if different from above

3 Check appropriate box for federal tax classification; check only one of the following seven boxes:
☐ Individual/sole proprietor or single-member LLC ☒ C Corporation ☐ S Corporation ☐ Partnership ☐ Trust/estate
☐ Limited liability company. Enter the tax classification (C=C corporation, S=S corporation, P=partnership) ▶
Note. For a single-member LLC that is disregarded, do not check LLC; check the appropriate box in the line above for the tax classification of the single-member owner.
☐ Other (see instructions) ▶

4 Exemptions (codes apply only to certain entities, not individuals; see instructions on page 3):
Exempt payee code (if any)
Exemption from FATCA reporting code (if any)
(Applies to accounts maintained outside the U.S.)

5 Address (number, street, and apt. or suite no.)
555 Keystone Drive

Requester's name and address (optional)

6 City, state, and ZIP code
Warrendale, PA 15086

7 List account number(s) here (optional)

Part I Taxpayer Identification Number (TIN)

Enter your TIN in the appropriate box. The TIN provided must match the name given on line 1 to avoid backup withholding. For individuals, this is generally your social security number (SSN). However, for a resident alien, sole proprietor, or disregarded entity, see the Part I instructions on page 3. For other entities, it is your employer identification number (EIN). If you do not have a number, see *How to get a TIN* on page 3.

Note. If the account is in more than one name, see the instructions for line 1 and the chart on page 4 for guidelines on whose number to enter.

Social security number
☐☐☐ - ☐☐ - ☐☐☐☐

or

Employer identification number
8 0 - 0 7 7 9 4 6 2

Part II Certification

Under penalties of perjury, I certify that:

1. The number shown on this form is my correct taxpayer identification number (or I am waiting for a number to be issued to me); and
2. I am not subject to backup withholding because: (a) I am exempt from backup withholding, or (b) I have not been notified by the Internal Revenue Service (IRS) that I am subject to backup withholding as a result of a failure to report all interest or dividends, or (c) the IRS has notified me that I am no longer subject to backup withholding; and
3. I am a U.S. citizen or other U.S. person (defined below); and
4. The FATCA code(s) entered on this form (if any) indicating that I am exempt from FATCA reporting is correct.

Certification instructions. You must cross out item 2 above if you have been notified by the IRS that you are currently subject to backup withholding because you have failed to report all interest and dividends on your tax return. For real estate transactions, item 2 does not apply. For mortgage interest paid, acquisition or abandonment of secured property, cancellation of debt, contributions to an individual retirement arrangement (IRA), and generally, payments other than interest and dividends, you are not required to sign the certification, but you must provide your correct TIN. See the instructions on page 3.

Sign Here Signature of U.S. person ▶ Date ▶ 4-25-16

General Instructions

Section references are to the Internal Revenue Code unless otherwise noted.

Future developments. Information about developments affecting Form W-9 (such as legislation enacted after we release it) is at *www.irs.gov/fw9*.

Purpose of Form

An individual or entity (Form W-9 requester) who is required to file an information return with the IRS must obtain your correct taxpayer identification number (TIN) which may be your social security number (SSN), individual taxpayer identification number (ITIN), adoption taxpayer identification number (ATIN), or employer identification number (EIN), to report on an information return the amount paid to you, or other amount reportable on an information return. Examples of information returns include, but are not limited to, the following:

- Form 1099-INT (interest earned or paid)
- Form 1099-DIV (dividends, including those from stocks or mutual funds)
- Form 1099-MISC (various types of income, prizes, awards, or gross proceeds)
- Form 1099-B (stock or mutual fund sales and certain other transactions by brokers)
- Form 1099-S (proceeds from real estate transactions)
- Form 1099-K (merchant card and third party network transactions)
- Form 1098 (home mortgage interest), 1098-E (student loan interest), 1098-T (tuition)
- Form 1099-C (canceled debt)
- Form 1099-A (acquisition or abandonment of secured property)

Use Form W-9 only if you are a U.S. person (including a resident alien), to provide your correct TIN.

If you do not return Form W-9 to the requester with a TIN, you might be subject to backup withholding. See What is backup withholding? on page 2.

By signing the filled-out form, you:

1. Certify that the TIN you are giving is correct (or you are waiting for a number to be issued),
2. Certify that you are not subject to backup withholding, or
3. Claim exemption from backup withholding if you are a U.S. exempt payee. If applicable, you are also certifying that as a U.S. person, your allocable share of any partnership income from a U.S. trade or business is not subject to the withholding tax on foreign partners' share of effectively connected income, and
4. Certify that FATCA code(s) entered on this form (if any) indicating that you are exempt from the FATCA reporting, is correct. See *What is FATCA reporting?* on page 2 for further information.

Section 9: Requested form - Statement of Bidder's Qualifications

Each Bidder for the work included in the specifications and drawings and the Contract Documents shall submit with their bid the data requested in the following schedule of information. This data must be included in and made a part of each bid document and be contained in the sealed envelope. Failure to comply with this instruction may be regarded as justification for rejecting the Contractor's proposal.

1. Name of Bidder: HUB Parking Technology USA, Inc.

2. Business Address: 555 Keystone Drive, Warrendale, PA 15086

3. Date Organized: 01/23/2012 4. Date Incorporated: 01/23/2012 Fed Tax ID # 80-0779462

4. If NOT INCORPORATED, state type of business (sole proprietor, LLC, other) and provide your Social Security number. Type of Business: n/a Social Security # n/a

5. Number of years engaged in contracting business under present firm name: 4 years

6. If you have done business under a different name, please give that name and location: HUB Parking Technology USA, Inc. is a merger of ZEAG America, Inc. (founded in 1971); Datapark, Inc. (founded in 1981); and CTR Parking (founded in 1992)

7. Percent (%) of work done by own staff: 80 %

8. Have you ever failed to complete any work awarded to your company? No

   If so, where and why? _____

9. Have you ever defaulted on a contract? No

   If so, where and why? _____

10. List three references. State name and telephone number of contact person. Use separate sheet if necessary.

Reference 1 .City Of Chicago / Millennium Garages /Jim Healy / SP Plus Regional Manager - Telephone Number: 312-274-2027 Email Address: jhealy@spplus.com

Reference 2 . New Haven Parking Authority Contact Person: Brian Seholm Telephone Number: 203-946-5917 Email Address: bseholm@nhparking.com

Reference 3 . New Brunswick Parking Authority Contact Person: Harry J. Delgado Telephone Number: 732-545-3118 ext. 112 Email Address: hdelgado@njnbpa.org

CITY OF COLUMBIA, MISSOURI

FINANCE DEPARTMENT
PURCHASING DIVISION

NOTICE TO BIDDERS
ADDENDUM #1 RFP: 157/2016
Parking Gate Arm

Bidders shall note these changes to the above Request for Proposal and *incorporate these changes in their submittal.* Bidders shall attach a signed acknowledged copy of this addendum to their proposal, if submitting a hard copy (via paper) or agree to the addendum electronically if submitting through the electronic bid system on line.

The following revisions and/or additions shall be referred to as part of the Proposal/Contract Documents.

General Clarifications:

1.) In addition to answers to these questions, the bid has also been extended and will now close at 5:00 p.m. on October 21.

Item #	Question	City Response
1	Can the City provide us with electrical drawing of the sites?	City does not have drawings for every garage but can provide what we do have. Please contact Tanner Morrel, tanner.morrel@como.gov
2	What type of hotel proximity cards are currently being used?	The hotel is currently using Saflok rfid.
3	In reference to the City's current pre-paid parking card, what are the specifications of the card that the system needs to integrate with?	City utilizes a micro-processor card. The card does not have a magstripe.
4	In reference to City's request for 2 ticket scanners in the event of a malfunction, are you requesting dual entry/exit stations at each lane or an additional barcode scanner only?	City is requesting an additional barcode scanner only.
5	In regards to PCI chip/pin compliance, are you requiring chip and pin units at all stations (entry/exit/pay stations) or only at the pay stations and exit stations? Can we bid EMV reader with chip only?	The EMV chip and pin units shall be only at pay stations and exit stations. The EMV reader may be bid as chip only as long as that is specified.

(LM)

6	In reference to page 5, exit gate, the RFP 3.3 mentions a card only replacement machine but this point mentions exact change. Will cash be accepted at the exit lanes or are they to be card only?	Exit machines shall only accept cards not cash.
7	Pay on foot machines: do they need to accept and give change in coins or bills only?	The pay on foot machines need to accept credit/debit cards, City's microprocessor cards, coins and bills. Pay machines will not dispense change.
8	In reference to RFP 3.3 page 5, Short Street, 5th and Walnut and 6th and Cherry garages, equipment list says "and possibly another gate arm with only a proximity card reader at the exit," do we need to include this additional equipment in our base bid?	Please include as an option to purchase.
9	Clarification: 6th & Cherry Specifications updated to include two (2) entry machines, not one.	

ACKNOWLEDGEMENT OF ADDENDUM #1

The undersigned Respondent hereby certifies that the changes set forth in this Addendum #1 have been incorporated in their proposal and are a part of Request for Proposal No. 157/2016. All other provisions of the proposal documents, except as herein stated, shall remain in force as written.

Firm HUB Parking Technology USA Inc. Date 10-19-2016

Signed Azar Mirzanov

Section 10: Subcontracting

If offeror proposes to use subcontractors for this project, offeror shall supply the information below for each subcontractor offeror proposes to use on the project. This information shall be submitted no later than three business days after proposal closing.

- Subcontractor Name/Address - Mid Missouri Electric, Inc. located at 1917 Paris Road, Columbia, MO 65201. Contact person Larry Stales, President; phone: 573-875-1545 / email: larry@midmissourielectric.com .
- Work Assigned- all of the civil work (electrical /conduit / cables / concrete) requested in this RFP
- DBE Firm- N/A

Section 11: Marketing Materials/Product Brochures

DATAPARK

DP11000 Datapark Parking Access and Revenue Control System

Software Control System

Starting in the early 80's DataPark has been providing customized software solutions for Parking Access and Revenue Control Systems (**PARCS**). Initial software development was aimed to interface with existing popular brands of parking equipment hardware.

For the past two decades DataPark has developed its own **PARCS** equipment that seamlessly integrates with DataPark's Parking Management software to provide state of the art system that is reliable, feature-rich, and user friendly.

The DataPark **PARCS** system was designed with the input from the User, resulting in a package that enhances the day-to-day operation and exception management, while providing usable data to make managerial decisions.

The DataPark Parking Management software runs on Windows XP or Windows 7 operating systems and meets all Parking Access and Revenue Control System (**PARCS**) specifications.

The overall design provides management and revenue control of any kind of exit/entry and payment transactions in real time.

The Datapark Software Parking Management System provides effective control and financial statistics at all operational and management levels.

The software suitably manages single and multiple facilities with equal ease. The controls and reporting are readily accessible through a modern network. DataPark provides **FEATURES** that you need, **RELIABILITY** that is required, **SERVICE** level that you deserve, and a **RETURN ON YOUR INVESTMENT** that you want.

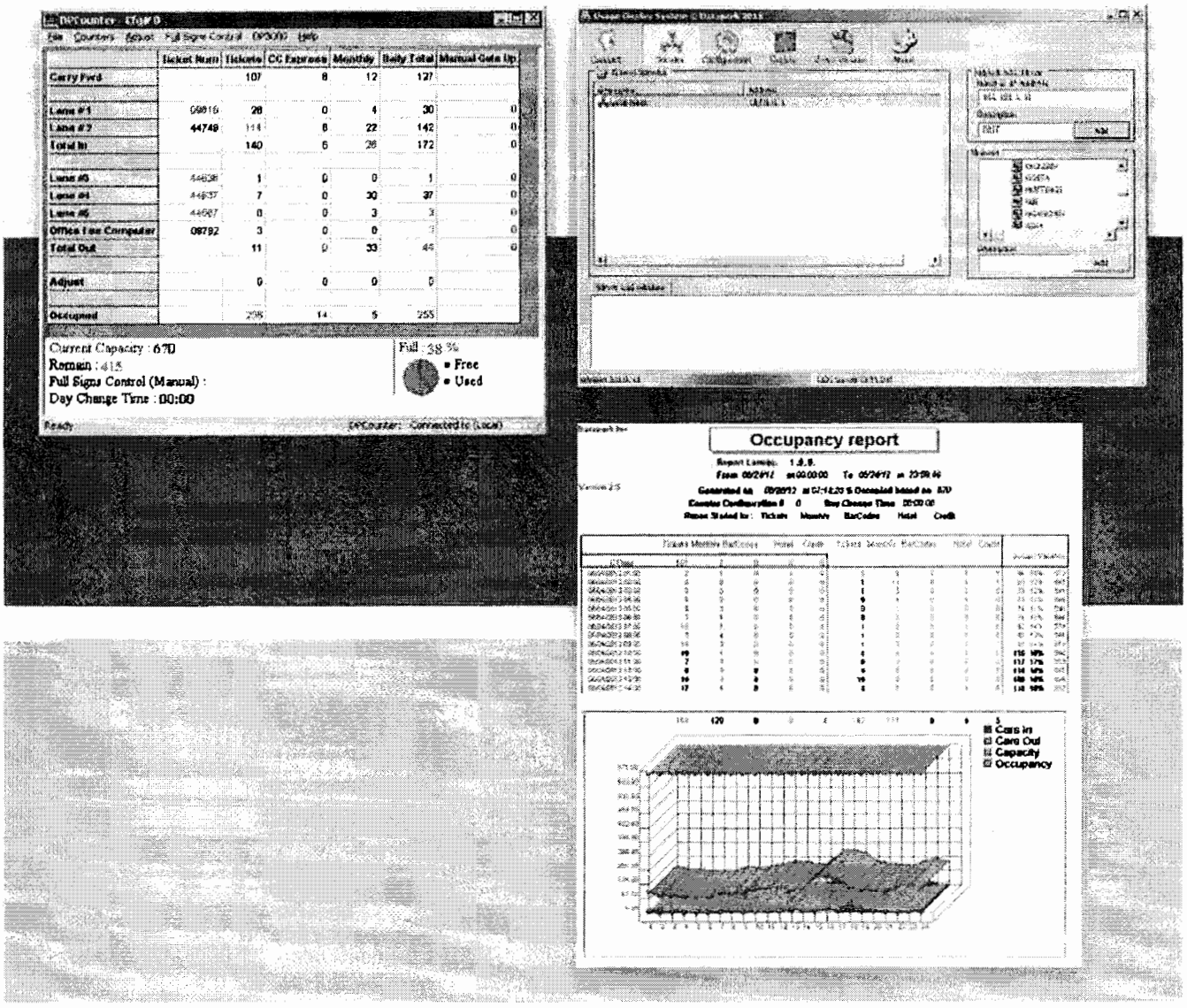

Ticket, Card, Count, and Monitoring

DataPark Parking Management software provides a package with wide range of parking statistics. The DPCounter can control the ticket dispenser and full signs through the menu controls or automatic function feature. In addition, the PCounter can save and transmit the current occupancy to an **XML** format each minute for use by remote parking control.
The DPCounter provides non-reset counts as well as the ability to adjust count and capacity.

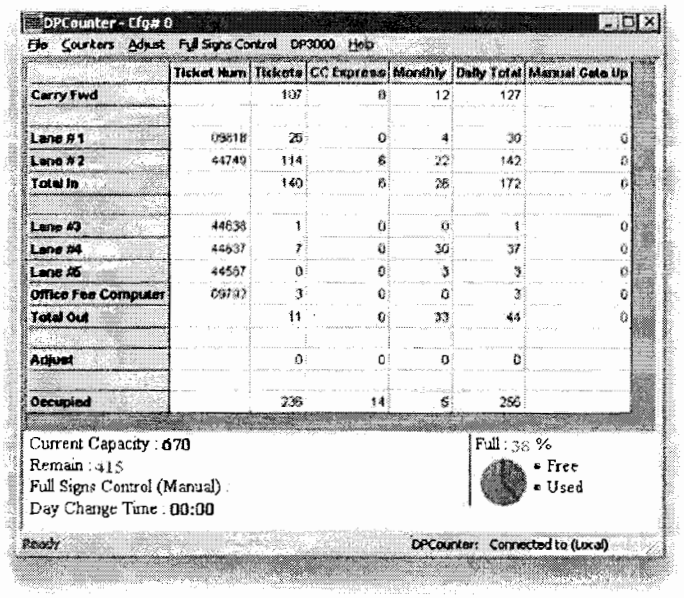

Configuring the DPCounter is simple and easy. Access is password controlled permitting only authorized access.

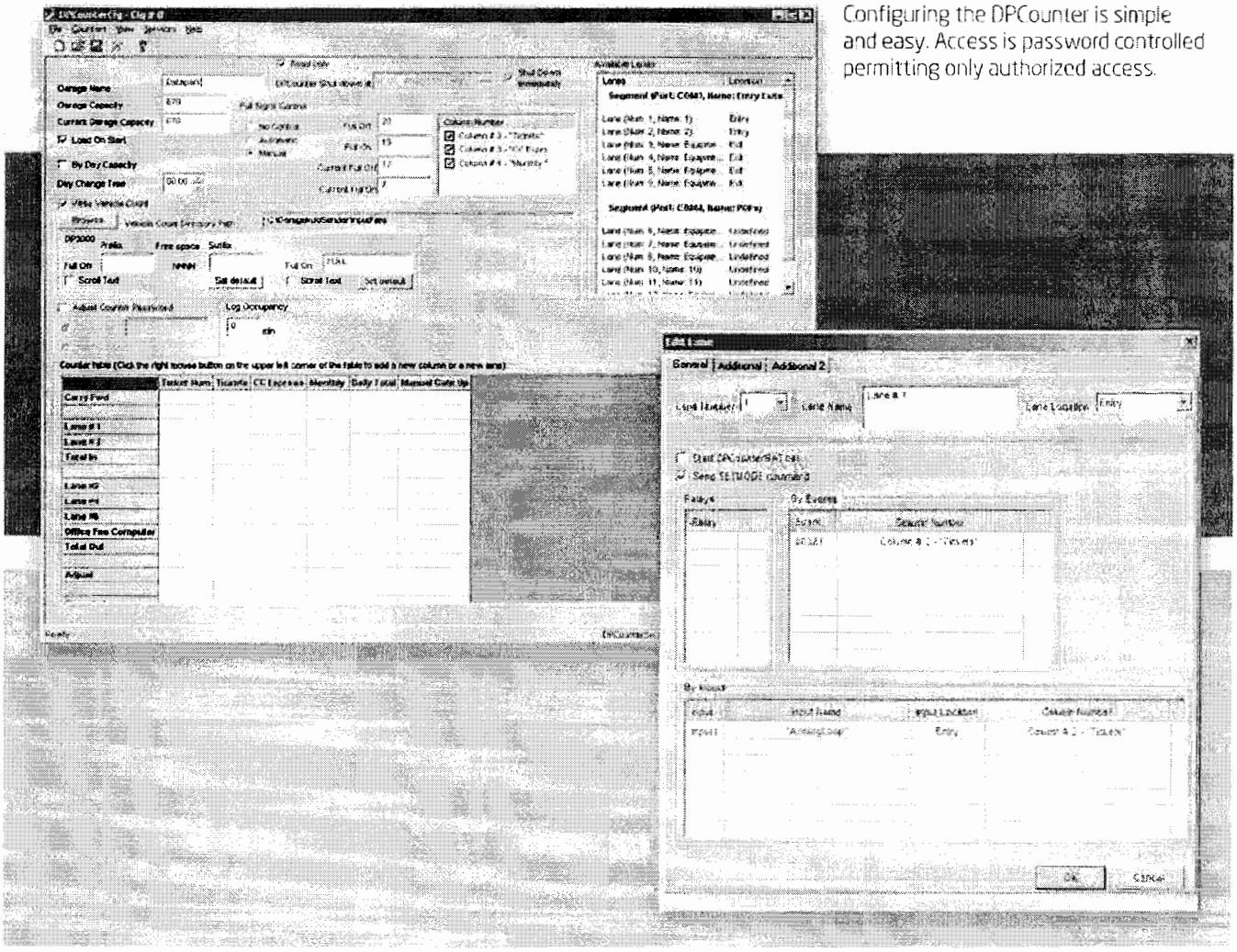

Revenue Control Module

The DataPark Revenue Control system monitors all real-time detailed transactions from all lanes and devices using RS232, RS485 or TCP/IP communication making it simple to manage revenue from a central location. The information is stored in the database and protected by security protocols and multiple levels of password protection.

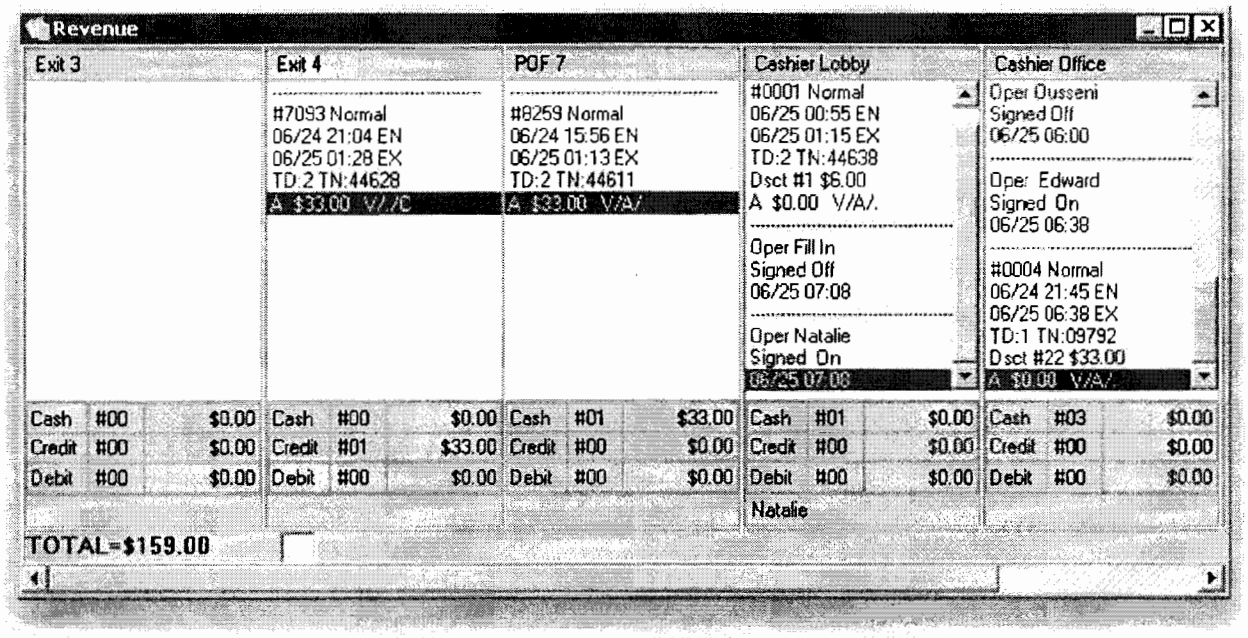

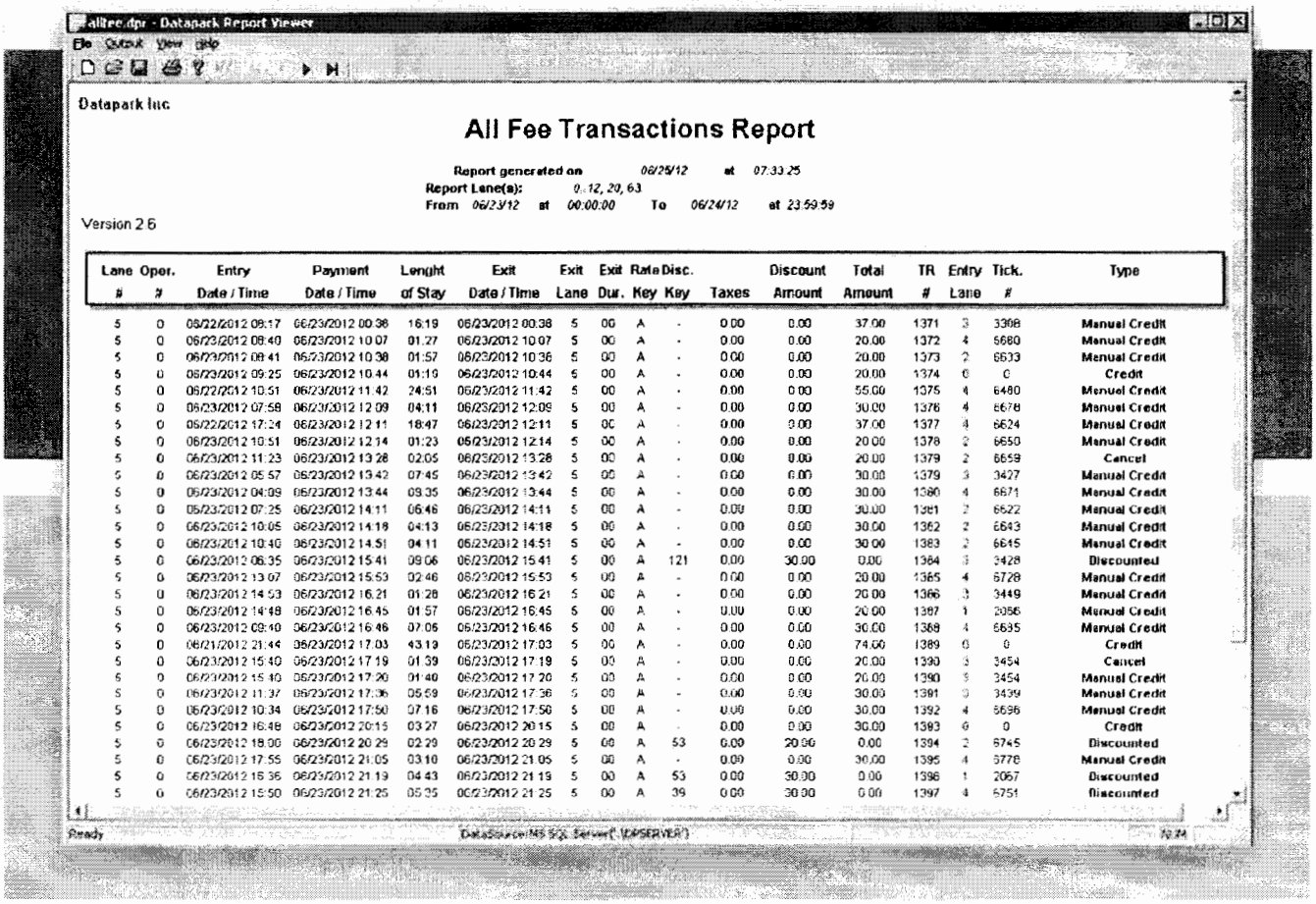

Lane #	Oper. #	Entry Date / Time	Payment Date / Time	Lenght of Stay	Exit Date / Time	Exit Lane	Exit Dur.	Rate Key	Disc. Key	Taxes	Discount Amount	Total Amount	TR #	Entry Lane	Tick. #	Type
5	0	06/22/2012 09:17	06/23/2012 00:38	16:19	06/23/2012 00:38	5	00	A	-	0.00	0.00	37.00	1371	3	3398	Manual Credit
5	0	06/23/2012 08:40	06/23/2012 10:07	01:27	06/23/2012 10:07	5	00	A	-	0.00	0.00	20.00	1372	4	6680	Manual Credit
5	0	06/23/2012 08:41	06/23/2012 10:38	01:57	06/23/2012 10:36	5	00	A	-	0.00	0.00	20.00	1373	2	6603	Manual Credit
5	0	06/23/2012 09:25	06/23/2012 10:44	01:19	06/23/2012 10:44	5	00	A	-	0.00	0.00	20.00	1374	0	0	Credit
5	0	06/22/2012 10:51	06/23/2012 11:42	24:51	06/23/2012 11:42	5	00	A	-	0.00	0.00	55.00	1375	4	6480	Manual Credit
5	0	06/23/2012 07:58	06/23/2012 12:09	04:11	06/23/2012 12:09	5	00	A	-	0.00	0.00	30.00	1376	4	6678	Manual Credit
5	0	06/22/2012 17:24	06/23/2012 12:11	18:47	06/23/2012 12:11	5	00	A	-	0.00	0.00	37.00	1377	4	6624	Manual Credit
5	0	06/23/2012 10:51	06/23/2012 12:14	01:23	06/23/2012 12:14	5	00	A	-	0.00	0.00	20.00	1378	2	6650	Manual Credit
5	0	06/23/2012 11:23	06/23/2012 13:28	02:05	06/23/2012 13:28	5	00	A	-	0.00	0.00	20.00	1379	2	6659	Cancel
5	0	06/23/2012 05:57	06/23/2012 13:42	07:45	06/23/2012 13:42	5	00	A	-	0.00	0.00	30.00	1379	3	3427	Manual Credit
5	0	06/23/2012 04:09	06/23/2012 13:44	09:35	06/23/2012 13:44	5	00	A	-	0.00	0.00	30.00	1380	4	6671	Manual Credit
5	0	06/23/2012 07:25	06/23/2012 14:11	06:46	06/23/2012 14:11	5	00	A	-	0.00	0.00	30.00	1381	2	6622	Manual Credit
5	0	06/23/2012 10:05	06/23/2012 14:18	04:13	06/23/2012 14:18	5	00	A	-	0.00	0.00	30.00	1382	2	6643	Manual Credit
5	0	06/23/2012 10:40	06/23/2012 14:51	04:11	06/23/2012 14:51	5	00	A	-	0.00	0.00	30.00	1383	2	6645	Manual Credit
5	0	06/23/2012 06:35	06/23/2012 15:41	09:06	06/23/2012 15:41	5	00	A	121	0.00	30.00	0.00	1384	3	3428	Discounted
5	0	06/23/2012 13:07	06/23/2012 15:53	02:46	06/23/2012 15:53	5	00	A	-	0.00	0.00	20.00	1385	4	6728	Manual Credit
5	0	06/23/2012 14:53	06/23/2012 16:21	01:28	06/23/2012 16:21	5	00	A	-	0.00	0.00	20.00	1386	3	3449	Manual Credit
5	0	06/23/2012 14:48	06/23/2012 16:45	01:57	06/23/2012 16:45	5	00	A	-	0.00	0.00	20.00	1387	1	2056	Manual Credit
5	0	06/23/2012 09:40	06/23/2012 16:46	07:06	06/23/2012 16:46	5	00	A	-	0.00	0.00	30.00	1388	4	6685	Manual Credit
5	0	06/21/2012 21:44	06/23/2012 17:03	43:19	06/23/2012 17:03	5	00	A	-	0.00	0.00	74.00	1389	0	0	Credit
5	0	06/23/2012 15:40	06/23/2012 17:19	01:39	06/23/2012 17:19	5	00	A	-	0.00	0.00	20.00	1390	3	3454	Cancel
5	0	06/23/2012 15:40	06/23/2012 17:20	01:40	06/23/2012 17:20	5	00	A	-	0.00	0.00	20.00	1390	3	3454	Manual Credit
5	0	06/23/2012 11:37	06/23/2012 17:36	05:59	06/23/2012 17:36	5	00	A	-	0.00	0.00	30.00	1391	3	3439	Manual Credit
5	0	06/23/2012 10:34	06/23/2012 17:50	07:16	06/23/2012 17:50	5	00	A	-	0.00	0.00	30.00	1392	4	6696	Manual Credit
5	0	06/23/2012 16:48	06/23/2012 20:15	03:27	06/23/2012 20:15	5	00	A	-	0.00	0.00	30.00	1393	0	0	Credit
5	0	06/23/2012 18:00	06/23/2012 20:29	02:29	06/23/2012 20:29	5	00	A	53	0.00	20.00	0.00	1394	2	6745	Discounted
5	0	06/23/2012 17:55	06/23/2012 21:05	03:10	06/23/2012 21:05	5	00	A	-	0.00	0.00	30.00	1395	4	6778	Manual Credit
5	0	06/23/2012 15:36	06/23/2012 21:19	04:43	06/23/2012 21:19	5	00	A	53	0.00	30.00	0.00	1396	1	2067	Discounted
5	0	06/23/2012 15:50	06/23/2012 21:25	05:35	06/23/2012 21:25	5	00	A	39	0.00	30.00	0.00	1397	4	6751	Discounted

Variable Message Signs

The DataPark Usage Display System (UDS) provides real-time count occupancy status by levels or areas. Messages and available space counts can enhance monitoring of the facility, improve space utilization, deviation of traffic congestions and inform patrons' means of access.

The UDS software can send data to preferred host/server (i.e. City Hall, DPT) where it can be forwarded to panels installed on city crossroads to inform the patrons where vacant parking spaces are available, making Parking Guidance and control a seamless operation.

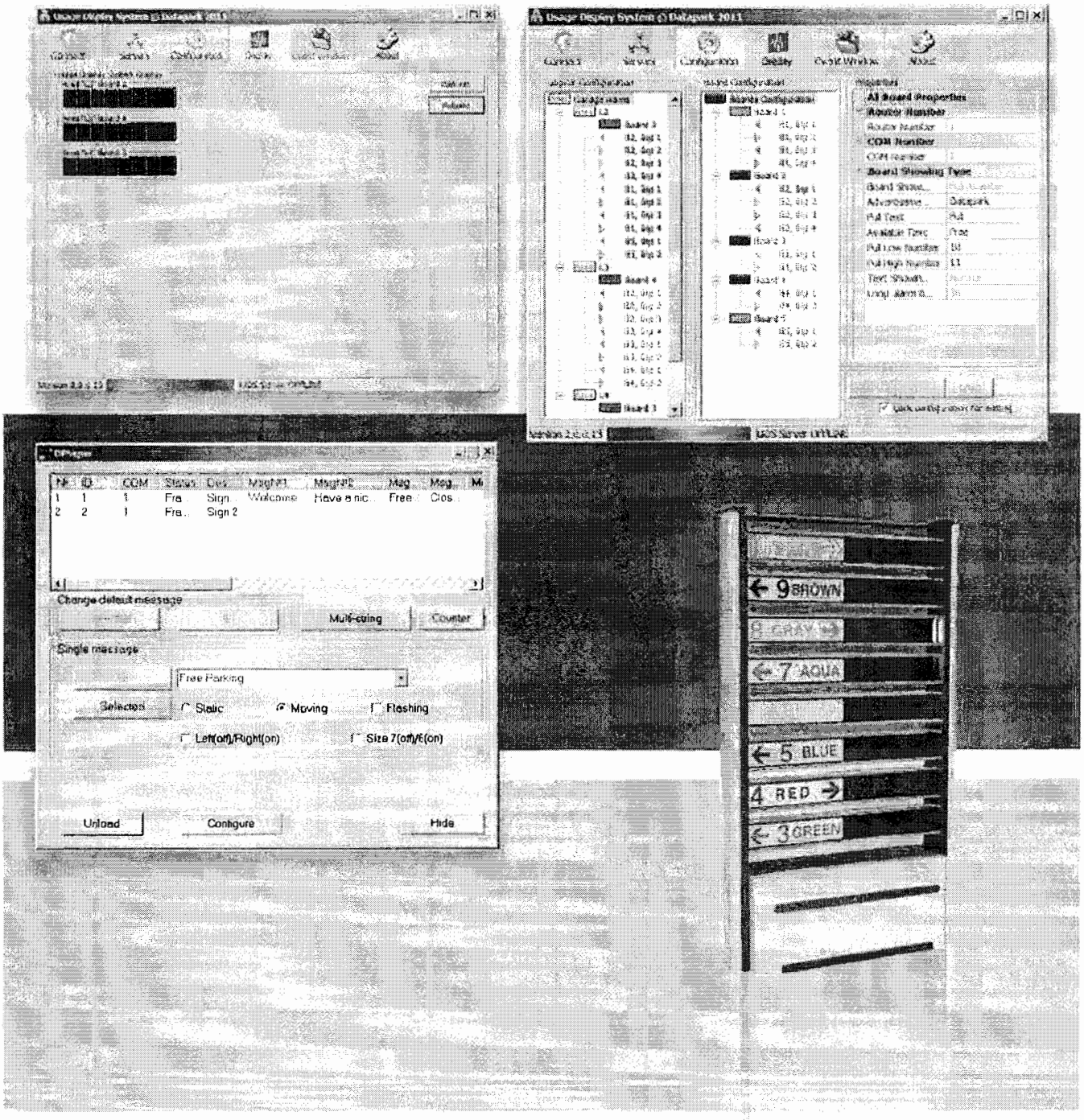

Valet Parking System

DataPark Valet Parking module provides tracking control of valet attendants on entry and exit.
The system tracks tickets by number as well as pairing the ticket numbers with either Operator ID card numbers, or Valet ID card numbers.

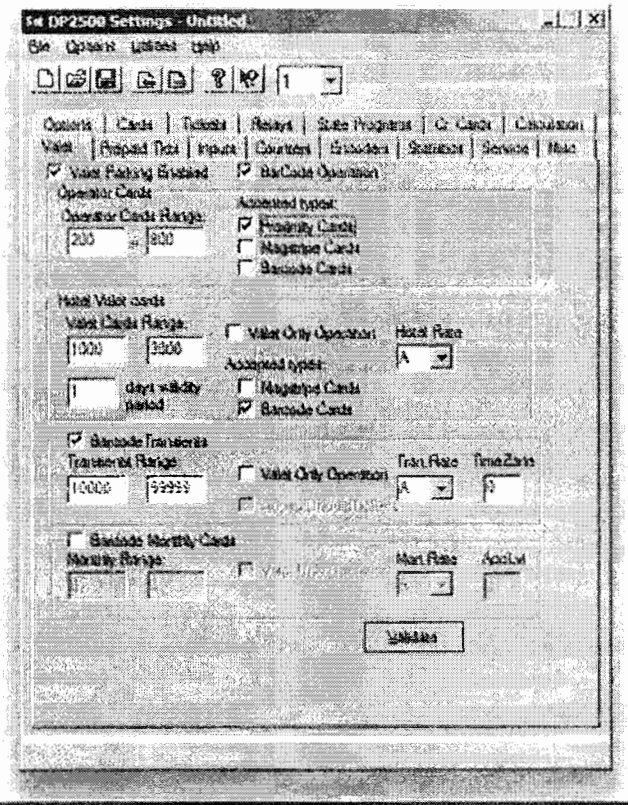

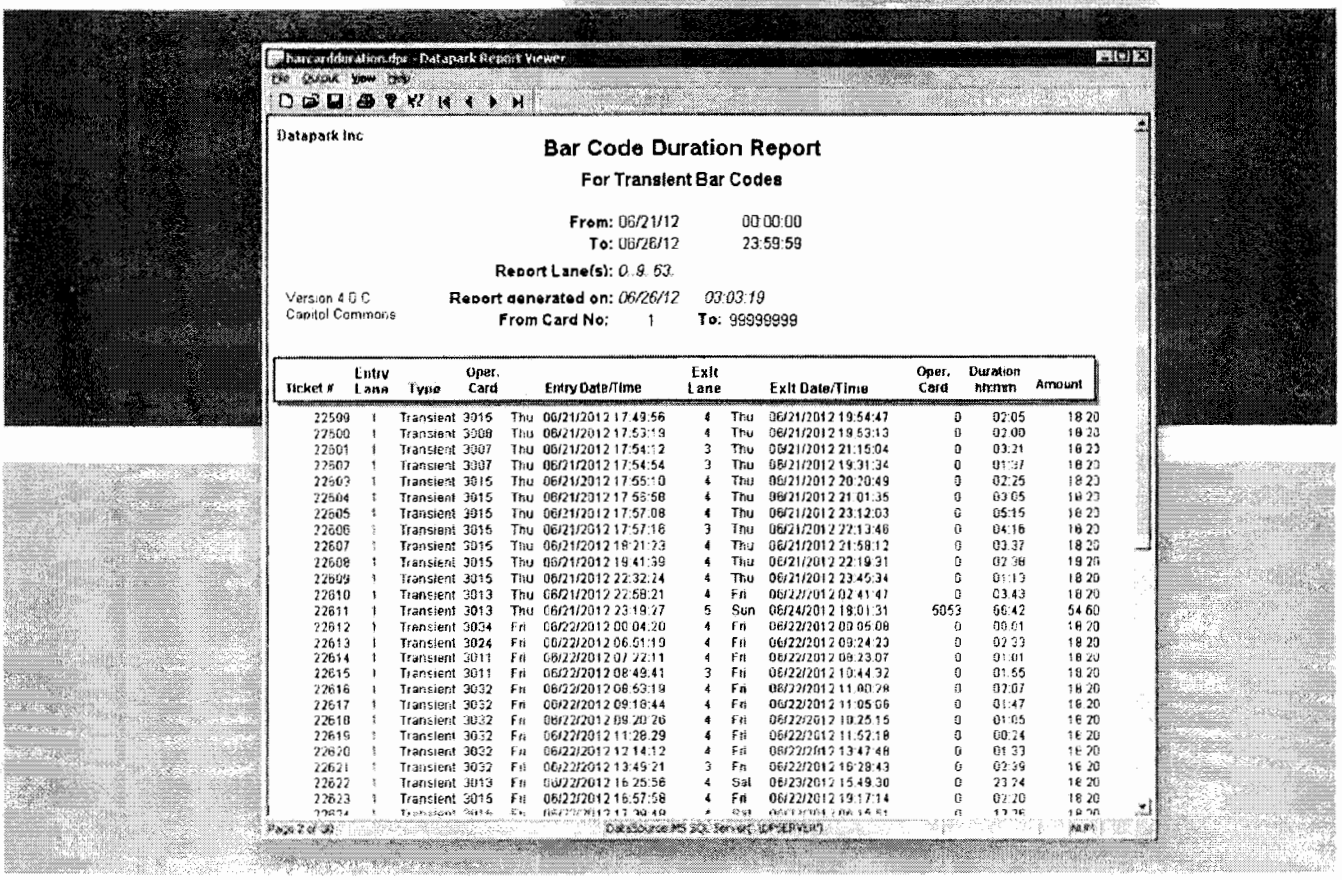

barcodeduration.dpx - Datapark Report Viewer

Datapark Inc

Bar Code Duration Report

For Transient Bar Codes

From: 06/21/12 00:00:00
To: 06/26/12 23:59:59

Report Lane(s): 0, 9, 63,

Version 4.0 C
Capitol Commons

Report generated on: *06/26/12 03:03:19*
From Card No: 1 **To:** 99999999

Ticket #	Entry Lane	Type	Oper. Card	Entry Date/Time	Exit Lane	Exit Date/Time	Oper. Card	Duration hh:mm	Amount
22599	1	Transient	3016	Thu 06/21/2012 17:49:56	4	Thu 06/21/2012 19:54:47	0	02:05	18.20
22600	1	Transient	3008	Thu 06/21/2012 17:53:19	4	Thu 06/21/2012 19:53:13	0	02:00	18.20
22601	1	Transient	3007	Thu 06/21/2012 17:54:12	3	Thu 06/21/2012 21:15:04	0	03:21	18.20
22602	1	Transient	3007	Thu 06/21/2012 17:54:54	3	Thu 06/21/2012 19:31:34	0	01:37	18.20
22603	1	Transient	3015	Thu 06/21/2012 17:55:10	4	Thu 06/21/2012 20:20:49	0	02:25	18.20
22604	1	Transient	3015	Thu 06/21/2012 17:55:58	4	Thu 06/21/2012 21:01:35	0	03:05	18.20
22605	1	Transient	3015	Thu 06/21/2012 17:57:08	4	Thu 06/21/2012 23:12:03	0	05:15	18.20
22606	1	Transient	3015	Thu 06/21/2012 17:57:16	3	Thu 06/21/2012 22:13:46	0	04:16	18.20
22607	1	Transient	3015	Thu 06/21/2012 18:21:23	4	Thu 06/21/2012 21:58:12	0	03:37	18.20
22608	1	Transient	3015	Thu 06/21/2012 18:41:39	4	Thu 06/21/2012 22:19:31	0	02:38	18.20
22609	1	Transient	3015	Thu 06/21/2012 22:32:24	4	Thu 06/21/2012 23:45:34	0	01:13	18.20
22610	1	Transient	3013	Thu 06/21/2012 22:58:21	4	Fri 06/22/2012 02:41:47	0	03:43	18.20
22611	1	Transient	3013	Thu 06/21/2012 23:19:27	5	Sun 06/24/2012 18:01:31	5053	66:42	54.60
22612	1	Transient	3034	Fri 06/22/2012 00:04:20	4	Fri 06/22/2012 00:06:08	0	00:01	18.20
22613	1	Transient	3024	Fri 06/22/2012 06:51:19	4	Fri 06/22/2012 09:24:23	0	02:33	18.20
22614	1	Transient	3011	Fri 06/22/2012 07:22:11	4	Fri 06/22/2012 08:23:07	0	01:01	18.20
22615	1	Transient	3011	Fri 06/22/2012 08:49:41	3	Fri 06/22/2012 10:44:32	0	01:55	18.20
22616	1	Transient	3032	Fri 06/22/2012 08:53:19	4	Fri 06/22/2012 11:00:28	0	02:07	18.20
22617	1	Transient	3032	Fri 06/22/2012 09:18:44	4	Fri 06/22/2012 11:05:06	0	01:47	18.20
22618	1	Transient	3032	Fri 06/22/2012 09:20:26	4	Fri 06/22/2012 10:25:15	0	01:05	18.20
22619	1	Transient	3032	Fri 06/22/2012 11:28:29	4	Fri 06/22/2012 11:52:18	0	00:24	18.20
22620	1	Transient	3032	Fri 06/22/2012 12:14:12	4	Fri 06/22/2012 13:47:48	0	01:33	18.20
22621	1	Transient	3032	Fri 06/22/2012 13:49:21	3	Fri 06/22/2012 16:28:43	0	02:39	18.20
22622	1	Transient	3013	Fri 06/22/2012 16:25:56	4	Sat 06/23/2012 15:49:30	0	23:24	18.20
22623	1	Transient	3015	Fri 06/22/2012 16:57:58	4	Fri 06/22/2012 19:17:14	0	02:20	18.20

Credit Card Parking

DataPark Credit Card module provides an extensive parking solution that interface to virtually all major payment processors. Variable modules such as, "**Credit Card In/Credit Card Out**" and "**Credit Card Pay-At-Exit**" provides speed processing at unattended lanes while accurately tracking revenue and statistics. Direct Monthly Billing Module is available for monthly parkers.

All Datapark Systems are in compliance with the latest PCI- PADSS requirements.

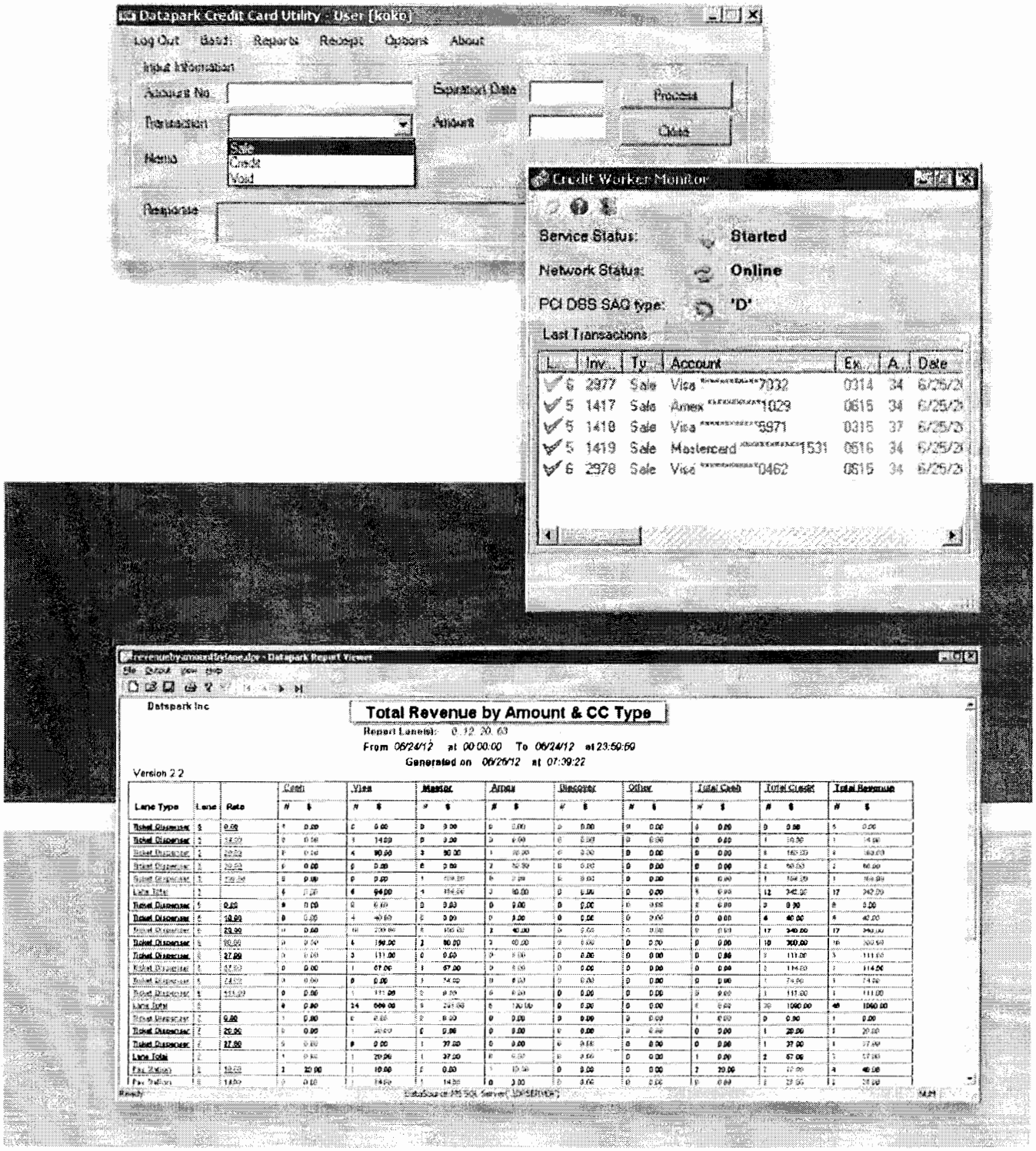

Debit, Value, Usage Cards

DataPark Debit/Value Usage Cards system provides alternate solution to traditional cash or credit card transactions.

The system gives the patron ability to enter and exit without a ticket or cash being required.

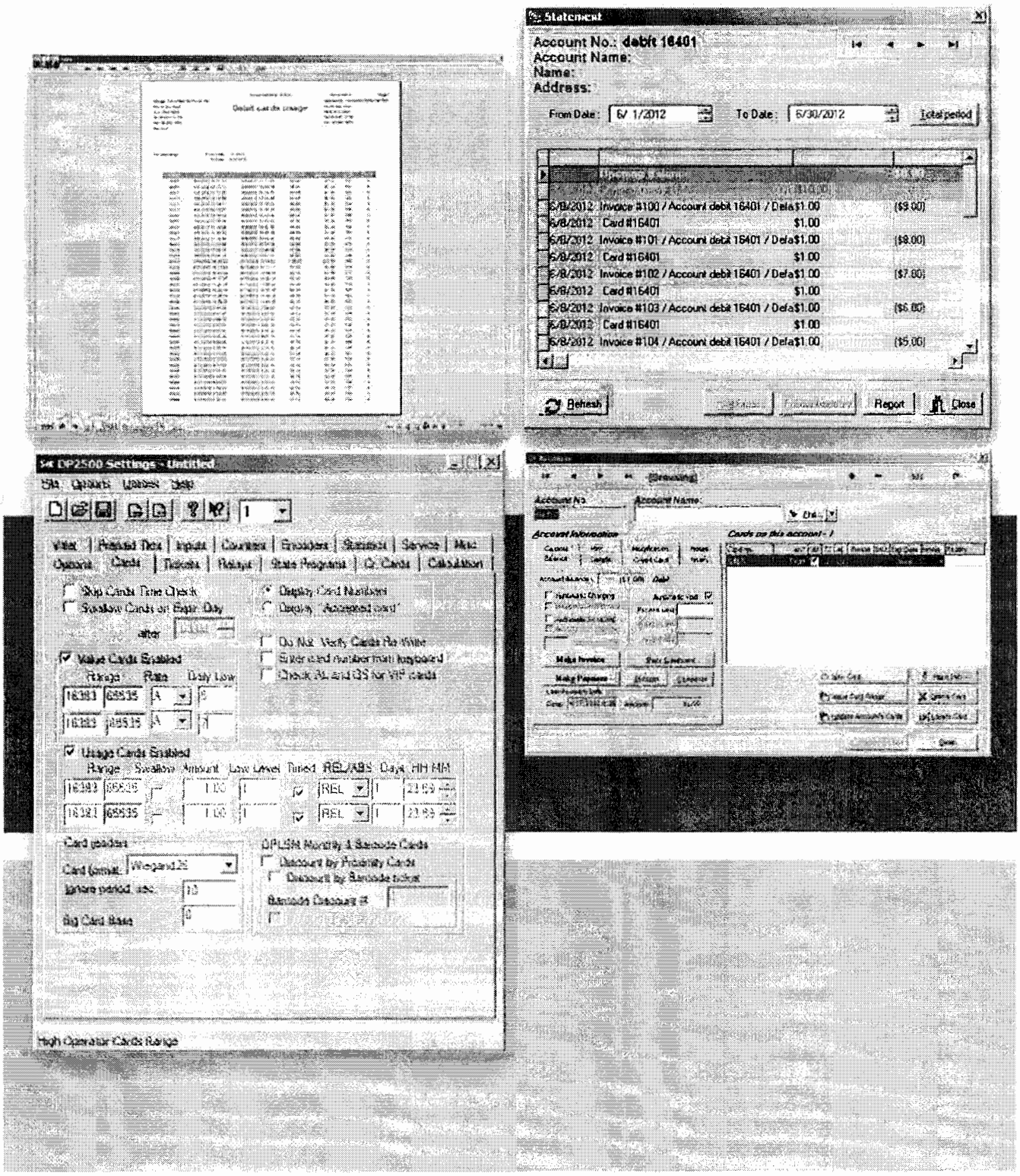

Event Module

DataPark Event system is an automated access control solution for stadium, convention, banquet, meeting and special events. Event tickets, access cards and passes can be easily encoded. The Event Module speeds the process of pre-pay and pre-sell of passes while providing patrons fast entry and exit.

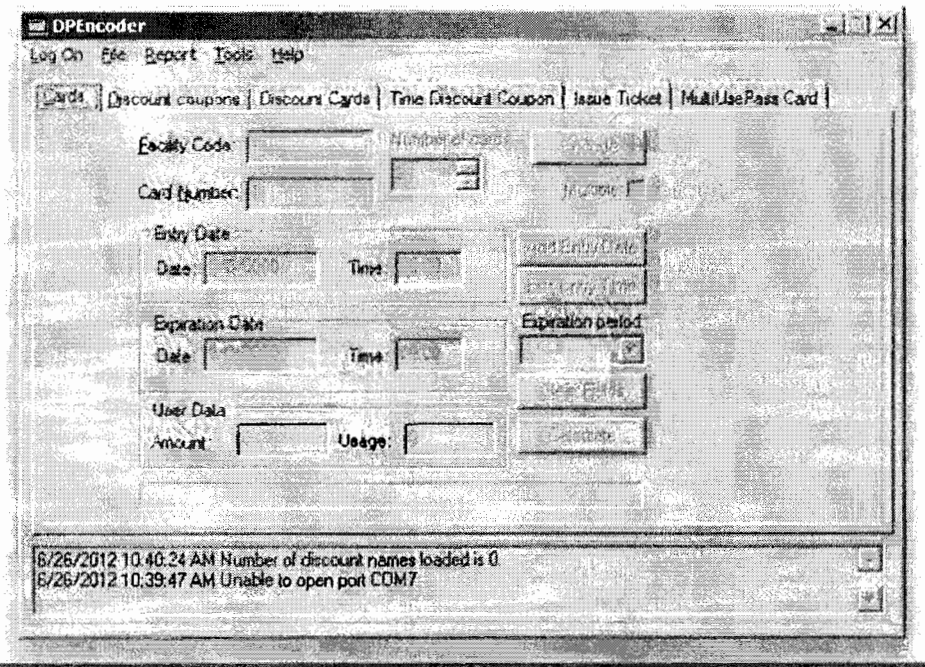

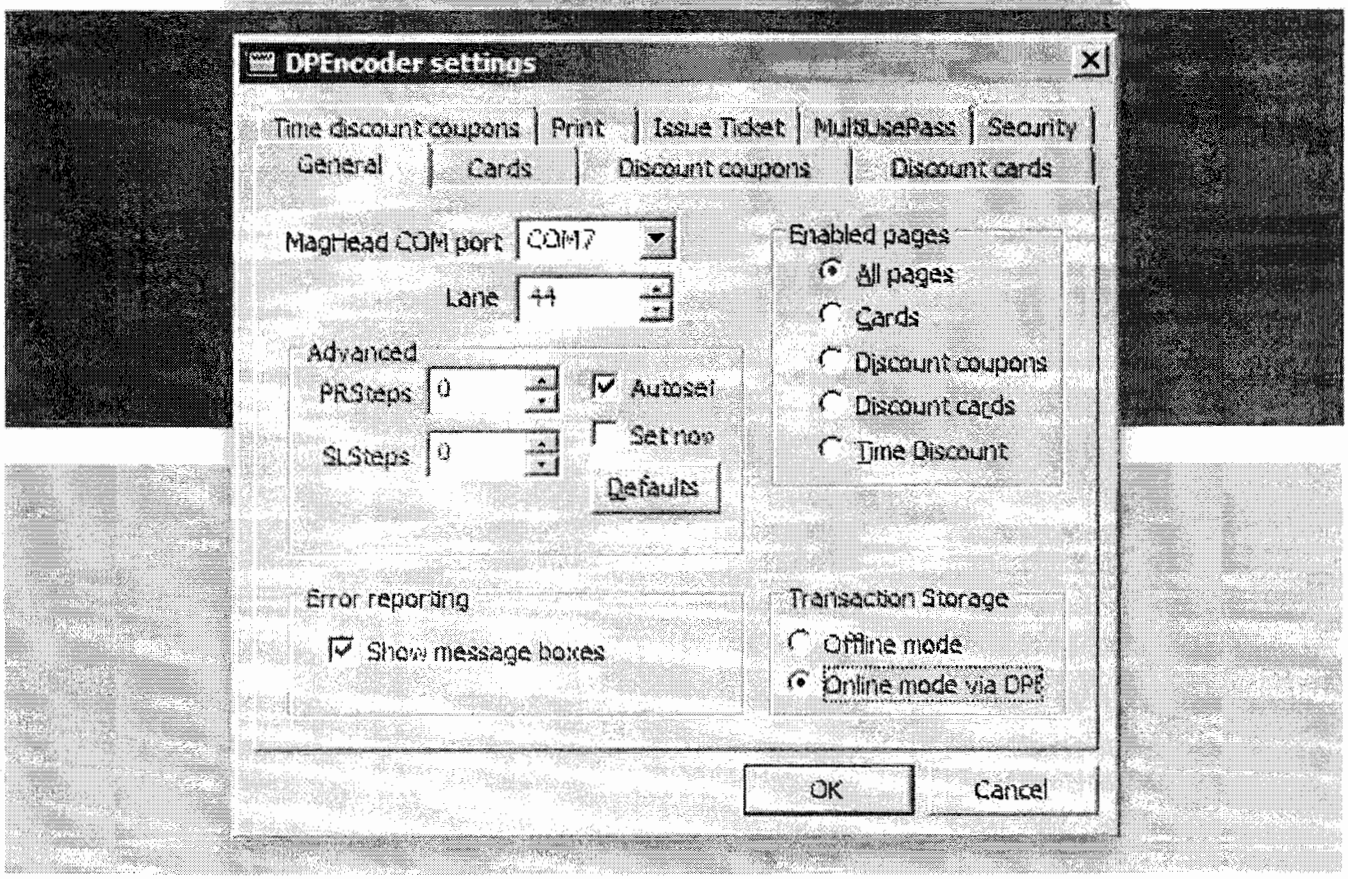

Access Control

DataPark Access Control module provides a full package of programming software to add, change or delete time/day access requirements as well as the system access levels.

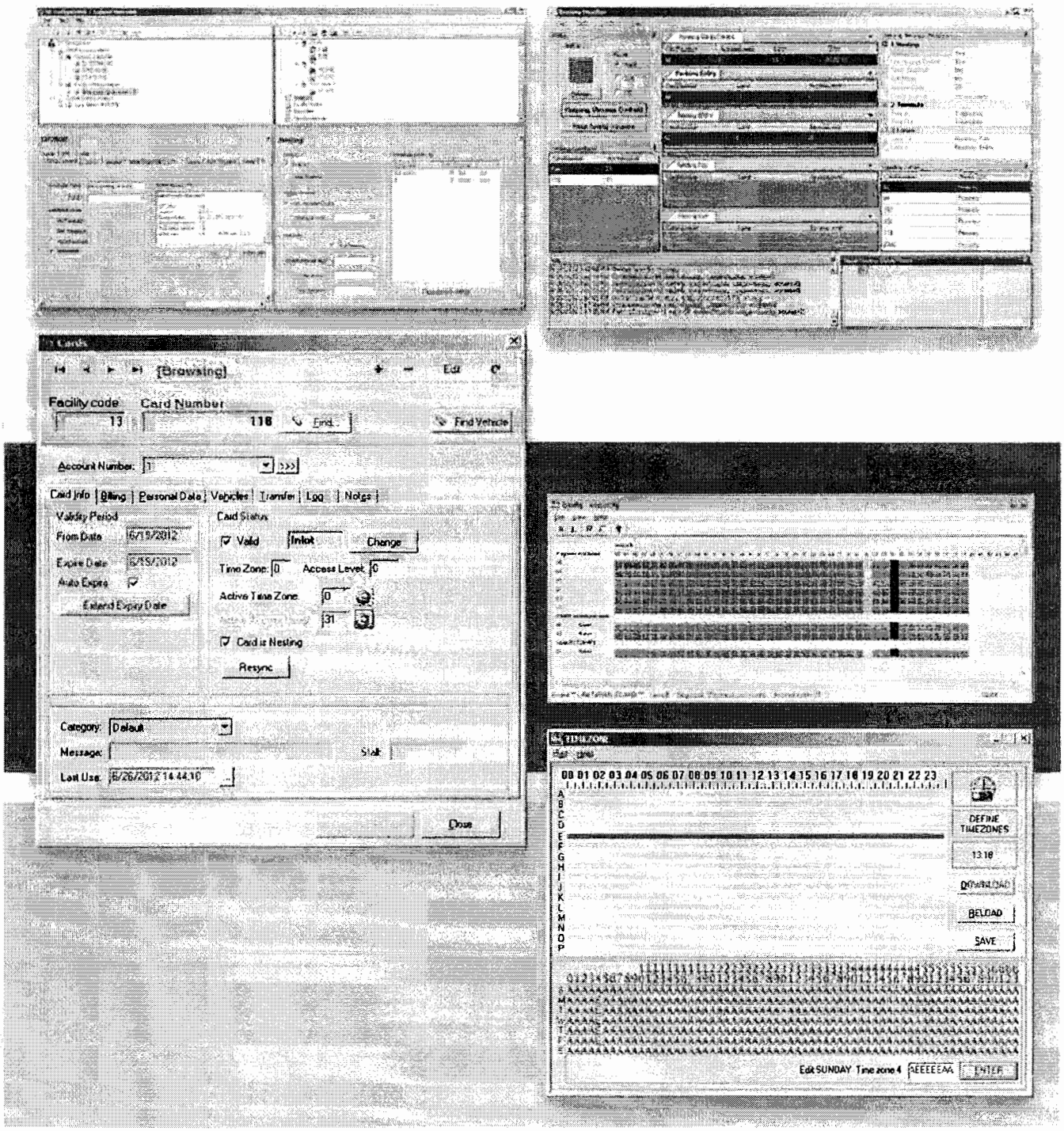

Accounts Receivable Module

DataPark Accounts Receivable module provides a solution for cash income management.

Posting monthly/debit payments and charges, invoicing, automatic card activation upon payment are a few of the many features available to improve audit management.

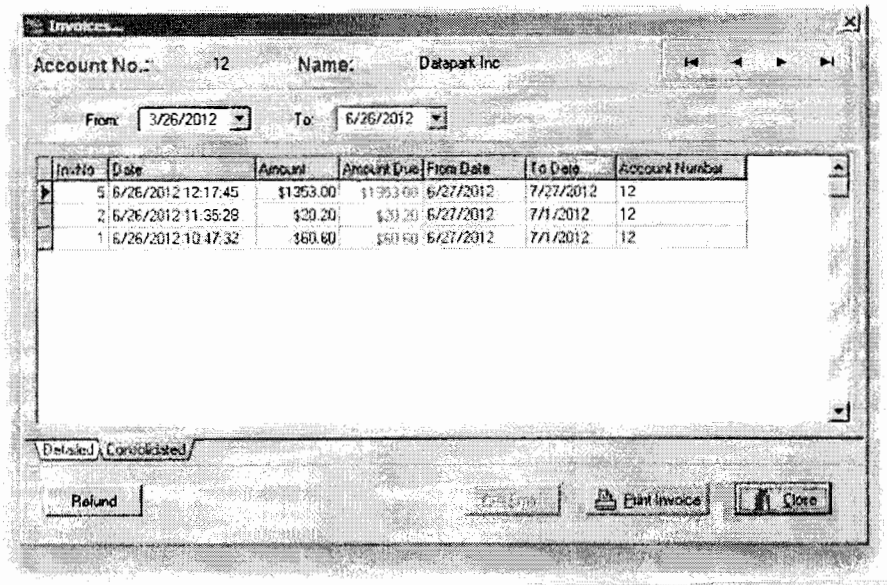

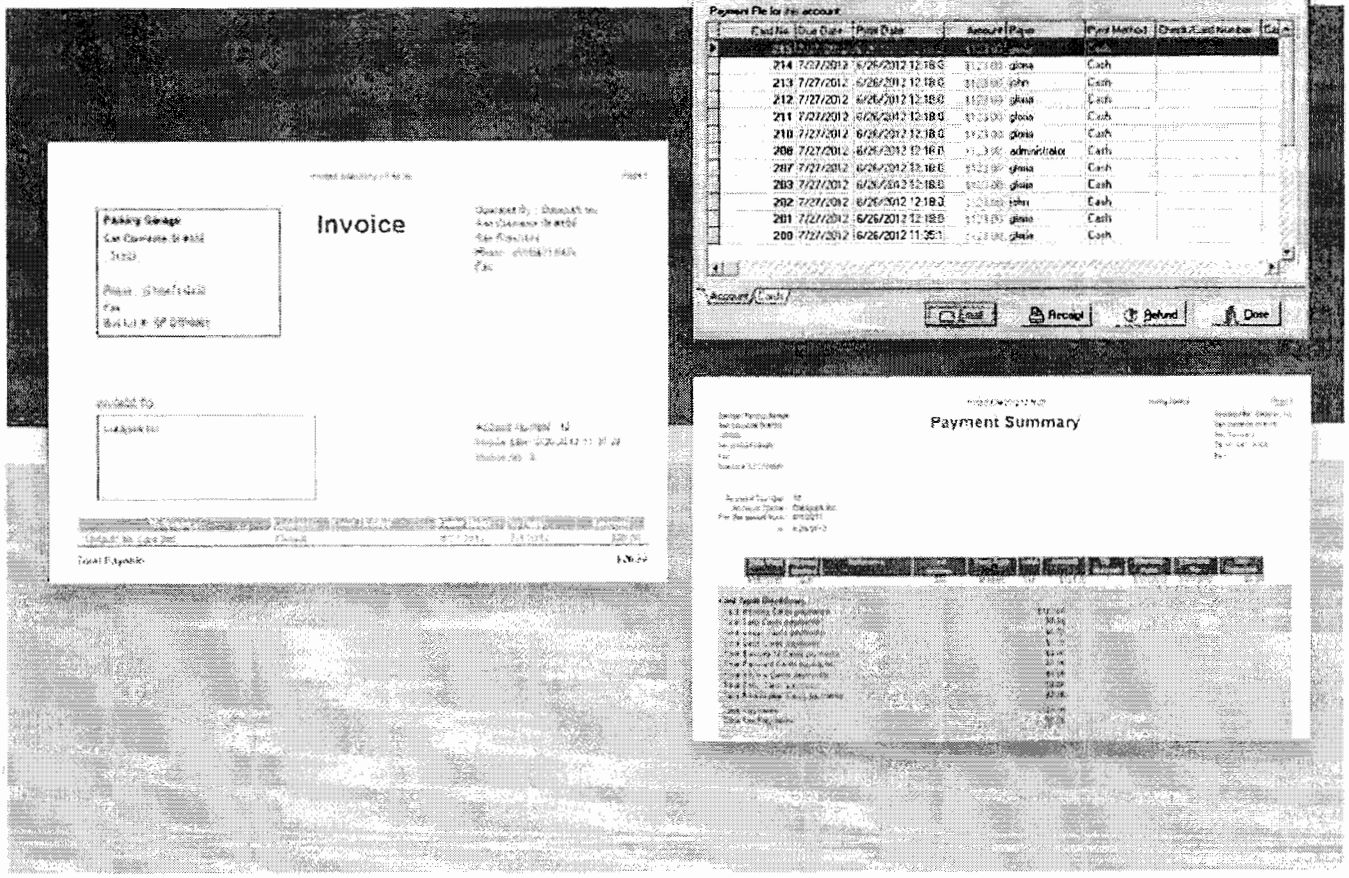

Message and Alarm Module

The DataPark Facility Management Software precisely displays a full range of standard alarms and messages.

All lane information is presented on a single screen for easy supervision.

The software has the ability to customize additional alarm and message configuration.

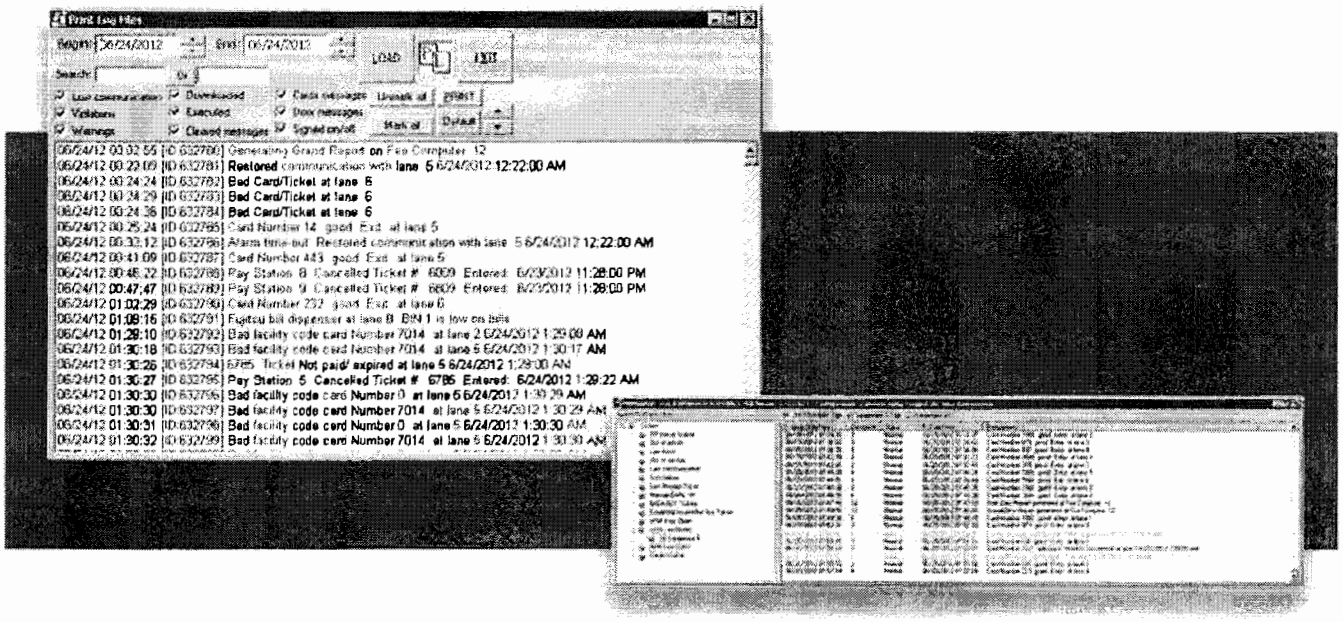

Card Pool

DataPark Car-Pool module is an easy way to manage multi-card accounts. By monitoring account activity the software either automatically denies entry (Hard Car-Pool) or calculates a fee (Soft Car-Pool) for exceeding the account occupancy limit. When occupancy set limit decreases, the system will allow additional cardholders access to the facility.

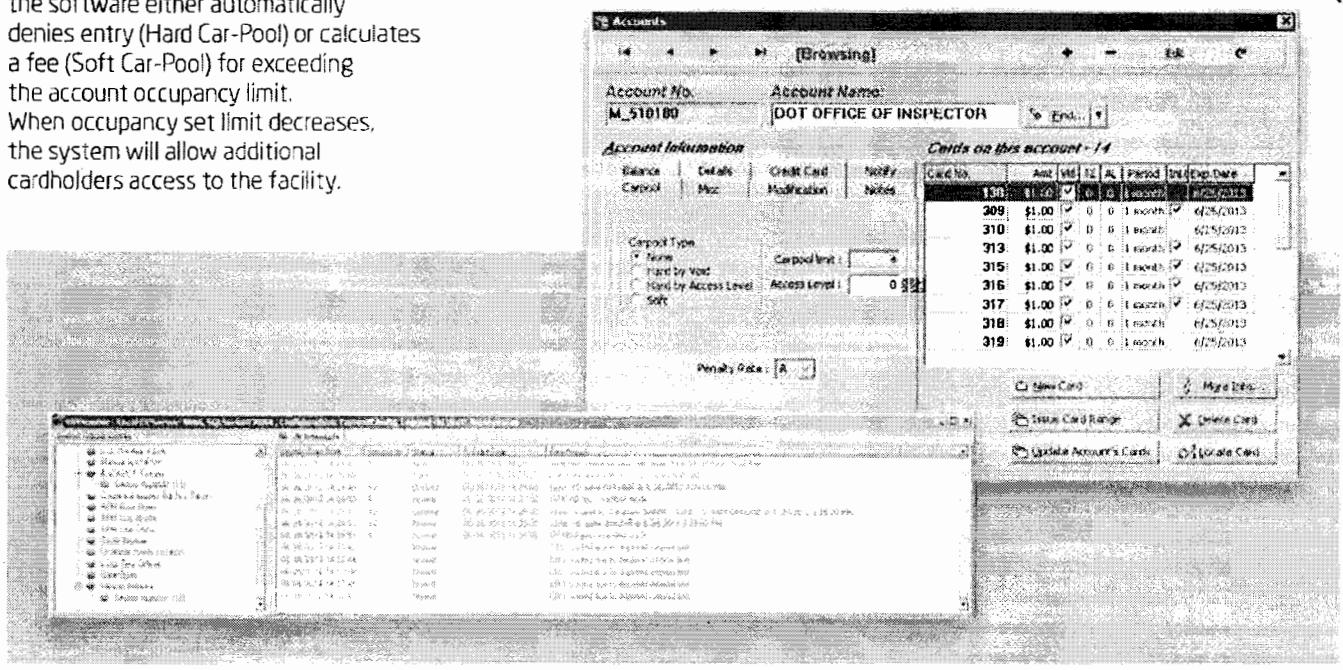

Automatic Functions

The Automatic Function includes automatic and manual dialogs for the control of all equipment devices.

Automatic controls can switch relays, print reports or update database on specified date, time or between set time intervals.

Manual controls can switch one or a group of relays from a single click.

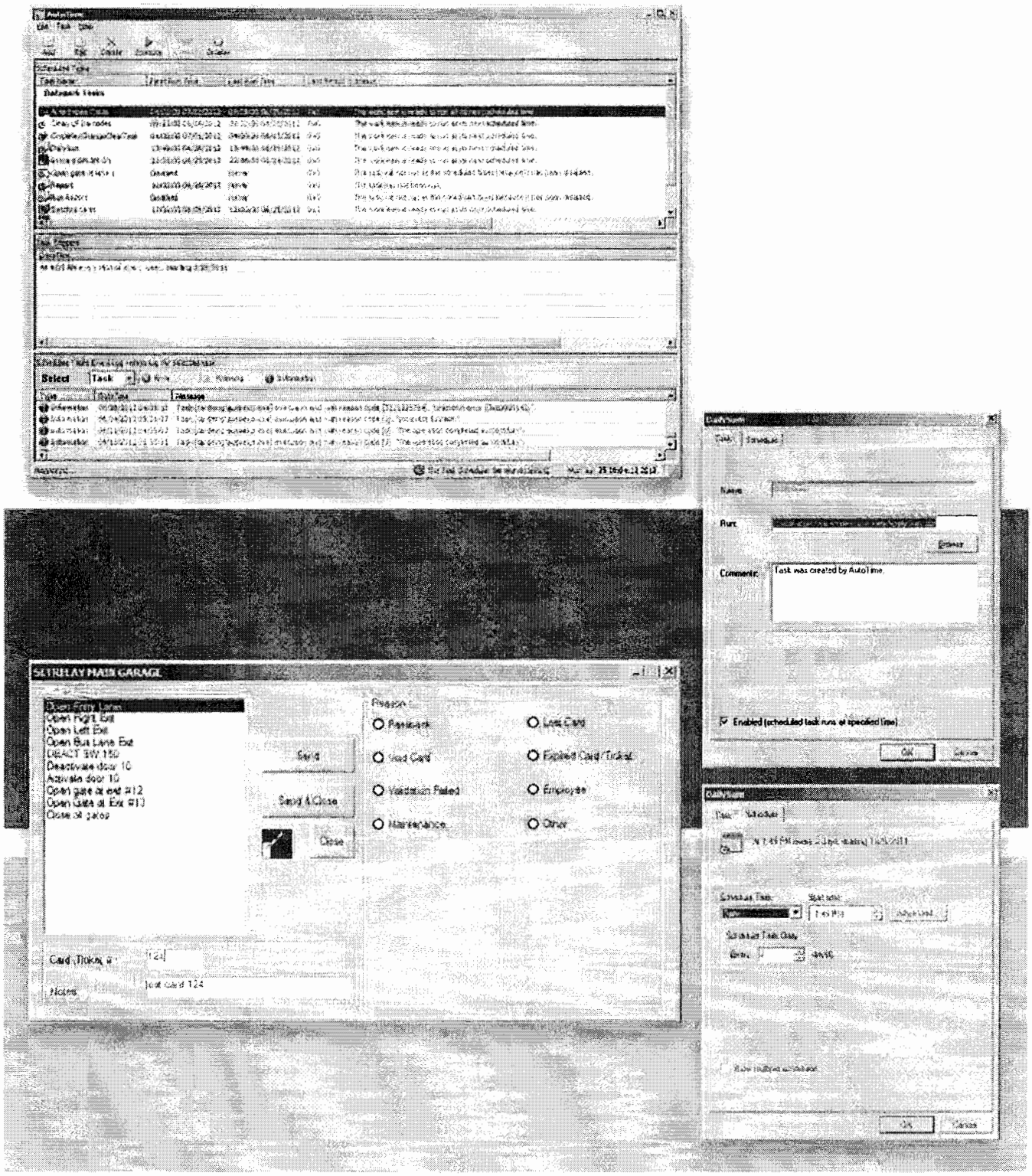

Report Module

The DataPark Report Generator provides the optimum audit control and statistical reporting resources.

Reports generation is designed to provide easy access to information needed to manage an effective parking operation.

The flexibility of the report module can generate standard reports and customize reports. The enhanced sophistication of the DataPark Report Generator is simple and efficient solution to economize operations and maximize revenue.

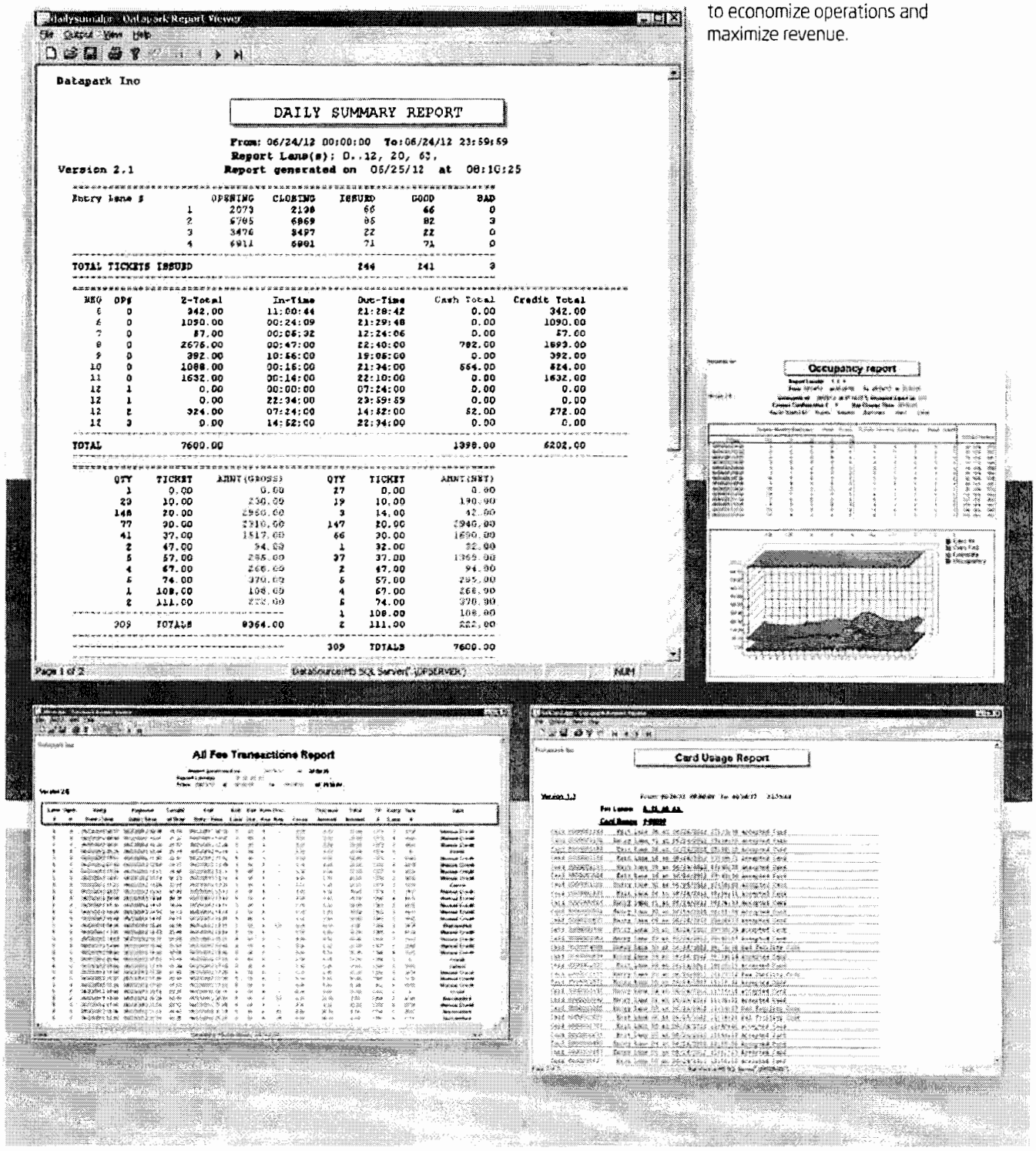

Hardware Configuration Module

The application allows you to program the lane equipment remotely allowing you full control over your system.

The Management software provides applications for programming the DataPark range of hardware.

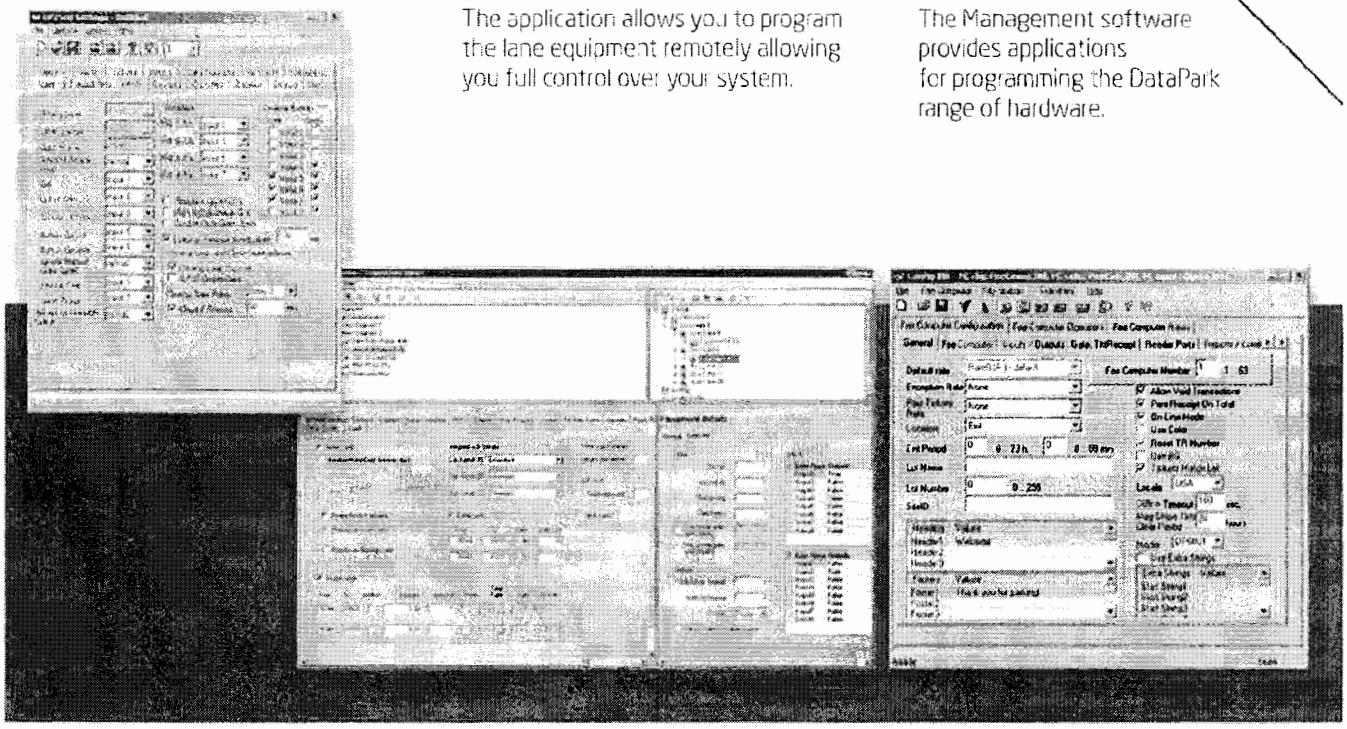

Users Authentication and Authorization

Users authentication and authorization controls the access to the applications and the work session of any DP11000 user. Different user roles are defined and organized by groups. Access rights to the applications are configured by groups that also allow for additional customization for each individual user.

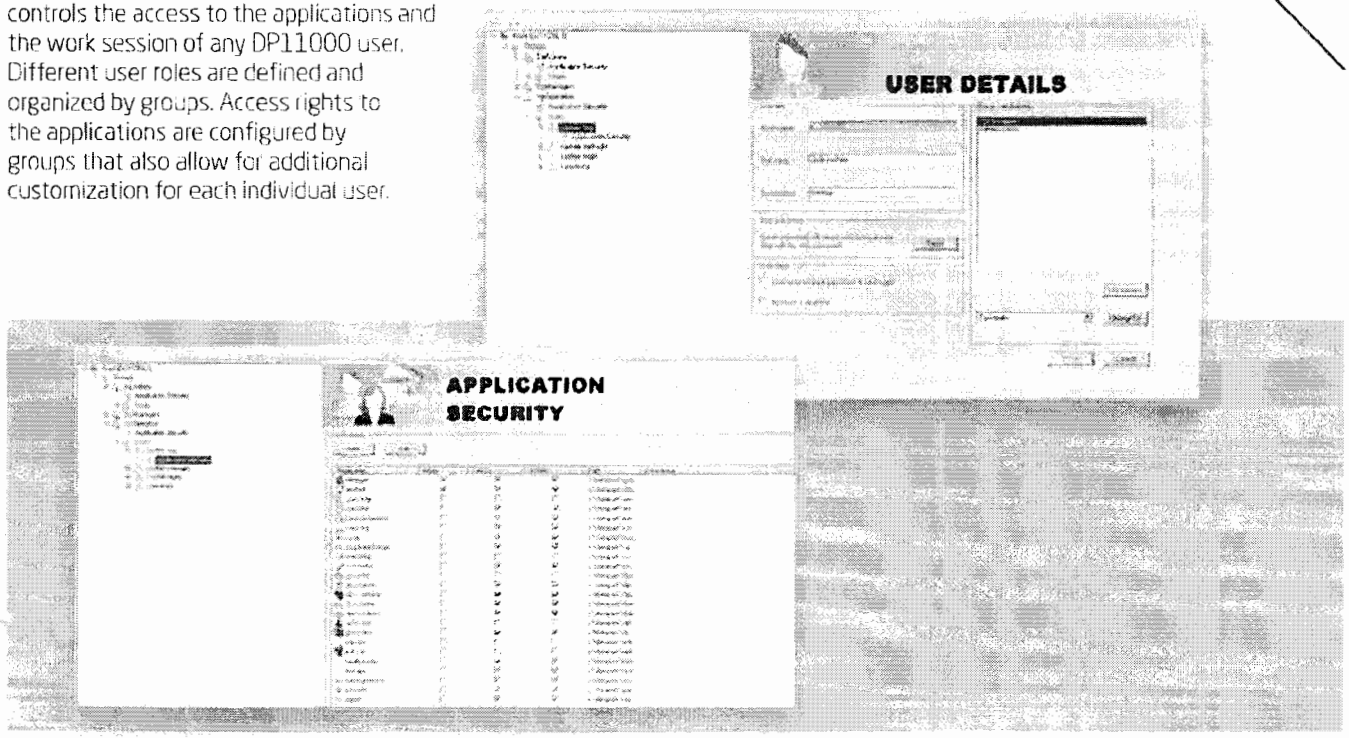

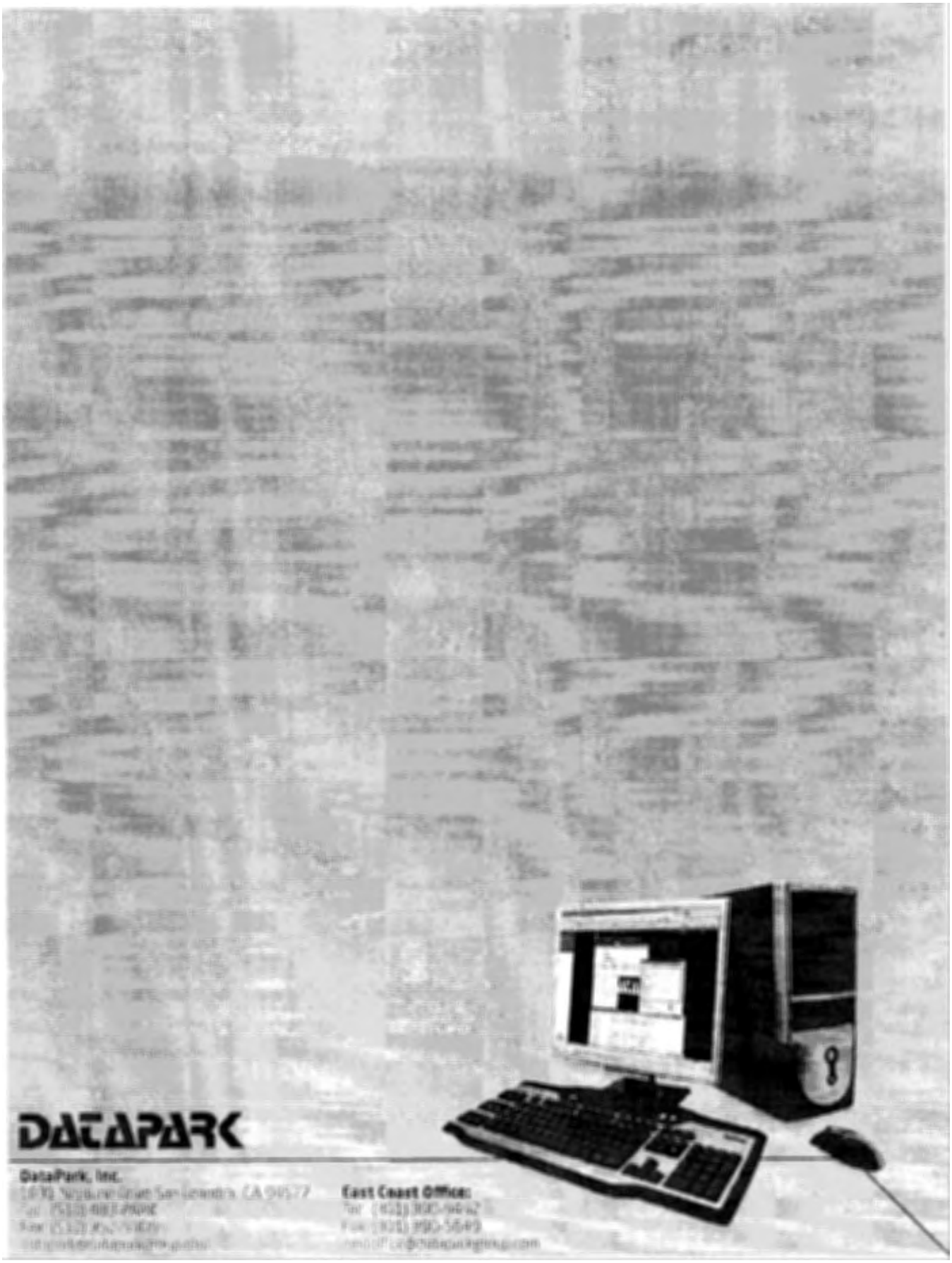
DATAPARK
DataPark, Inc.
East Coast Office:

Barriers

MHTM™ MicroDrive

Parking HUB

Parking Pro-M

MHTM™ MicroDrive

PARKING PRO-M barriers were specifically designed for highly frequented applications. The PARKING PRO-M barriers do not only offer fast opening times, long-life cycle, reliability and quality. Furthermore, they amaze with extraordinary design, extremely low operational costs, easy handling and almost maintenancefree technology.
In a nutshell: PARKING PRO-M barriers are the first choice for car park operators that need to establish an easy and reliable vehicle access control.

- **High ease of use**
- **Maximum accessibility**
- **Only 95W power consumption**
- **MCBF of 10 Mio cycles**
- **Safe control unit according to EN 13849**
- **Maximum connectivity (I/O, TCP/IP, RS-485, etc.)**
- **Best protection against corrosion thanks to extruded aluminium profiles and a base frame made of stainless steel**
- **Winner of the Red Dot Award Product Design 2012 and German Design Award 2014**

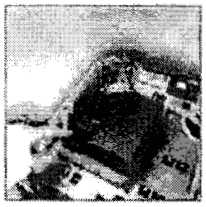

CONTROL UNIT

The control unit MGC Pro is compliant with EN 13849. It is located directly underneath the top cover and can be accessed from all sides. Configuring the barrier is easily accomplished via the LCD's intuitive user interface that can be navigated with just 4 push-buttons.

DRIVE UNIT

The drive unit is small in size but allows to obtain a high torque with an extremely minimized power consumption. The high torque guarantees best operation even under severe weather conditions. The motor, motor controller and gearing are all combined in one compact drive unit.

MICROBOOM AND BREAK-AWAY FLANGE

The Microboom with a foamed edge offers best protection against damages and harm to people. The optionally available break-away flange may be used to drop the whole barrier boom in case of an unwanted or forced drive-through.

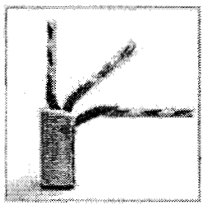

LED ILLUMINATION STRIP

The optionals LED strips illuminate the closing edge of the barrier boom on both sides. They are securely installed underneath the foamed edge protection.
The LED strips vastly enhance the visibility of the barrier boom. Even under poor conditions or at night, the barrier boom may be recognized from a long distance.
Compared to an unlit barrier boom, the perceptibility is yet enhanced in broad daylight.

TECHNICAL DATA

Lane width max.	3.5 m
Opening / closing time	1.3 s
Power consumption max.	95 W
Duty cycle	100%
Supply voltage	Wide voltage range 85 - 264 V AC
Frequency	50 - 60 Hz
Housing dimensions (WxDxH)	315 x 360 x 1115 mm
Weight (without boom)	44 kg
Housing design	Powder-coated aluminium
Base frame	Powder-coated stainless steel
Protection class	IP 54
Compliant with	2004/108/EC, 305/2011, 2006/42/EC, CE, UL 325
Temperature Range	-30 to +55 °C

FEATURES

Microboom	Standard
Control unit	MGC Pro
Integrated 2-channel loop detector	Standard
Control unit modularly extendable	Standard
Variable I/O assignment	Standard
Number of digital inputs	8
Number of relay / digital outputs	6/4
Closing times selectable	Standard
Opening times selectable	Standard
Solar / battery option	Optional
Extended accessories	Optional
Specified number of cycles	10 Mio
Warranty	2 Years

Parking HUB

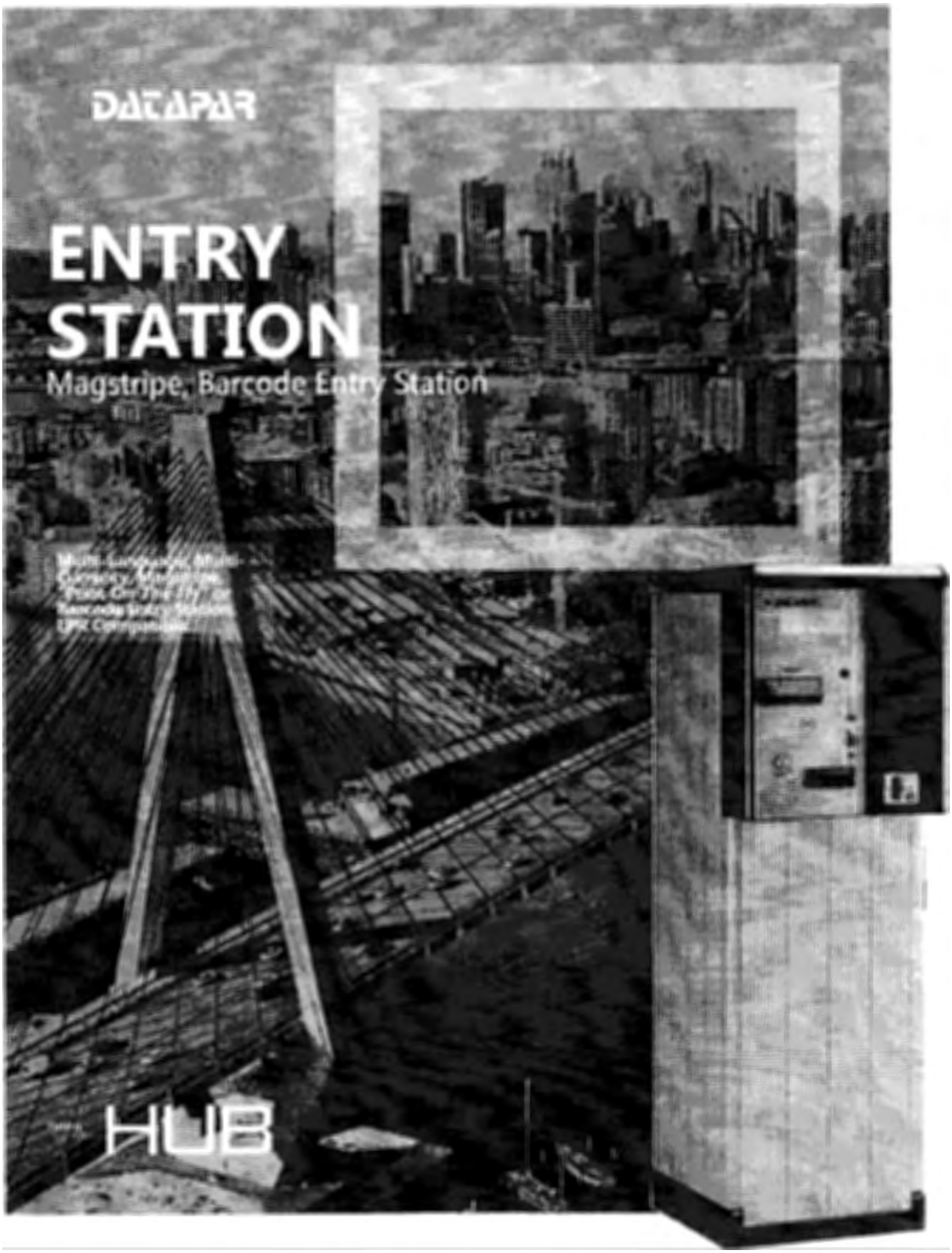
DATAPAR
ENTRY
STATION
Magstripe, Barcode Entry Station
HUB

Base Model

- Barcode Printer
- Control Unit
- Terminal Board
- Voice Board
- Graphic Display
- Ticket Collection Sack / Approx. 2,000 Tickets
- Ticket Cardboard Box Platform / 10,000 Tickets
- Test Control Panel
- Speaker
- Heater 450W
- Power Supply
- Right Access Door
- Safety Lock and Keys
- All Necessary Cutouts for EMV Contact and Contactless Readers Fitting
- Top and Base: Steel, painted RAL7021 Dark Grey
- Housing: Aluminum, RAL9006 Light Grey

Options

- OEM Barcode Scanner Internal / Print-On-The-Fly Discount Operation
- OEM Barcode Scanner External / Print-On-The-Fly Discount Operation
- Receipt Printer - Internal
- Mini Proximity Reader - Internal
- Maxi Proximity Reader - Side Mounted
- Insert Reader - Outdoor - Dual Head
- Handicap Verifier - Side Mounted
- Sign - Indoor
- Sign - Outdoor
- Intercom Button
- Custom Color
- Left Access Door
- IP Intercom
- IP Video Camera
- Power Heater 600W
- Access Keyboard / No Proximity Reader

Standard Features

- Online System
- TCP/IP or RS485 Communication Mode
- Programmable Graphic Display
- Push Button or Auto Ticket Issuance
- Voiding of Tickets
- Backout Logic
- Custom Management Reporting
- Remote Rate Change
- Input Programming Logic
- Gateless Count Logic
- Credit Card In / Credit Card Out Option
- 32 Programmable Rates
- 256 Programmable Validations
- 64 Time Zones
- Tax Calculation
- Holiday Rates Programming
- Blackout Dates Programming

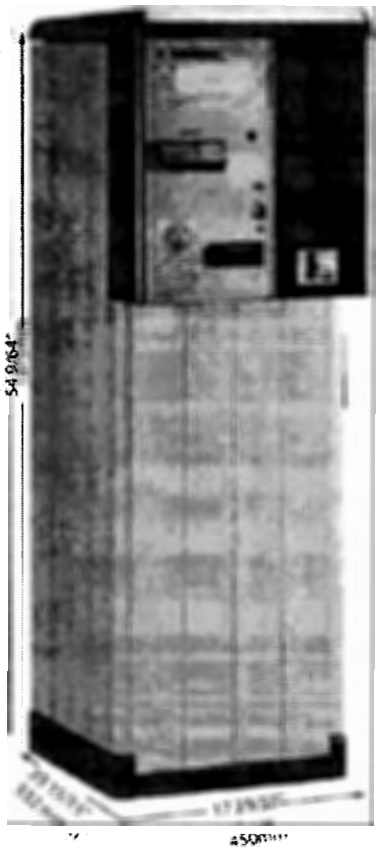

Peripheral Dimensions (W x D x H)
450 mm x 532 mm x 1375 mm
17/ 23/32" x 20 15/16" x 54 9/64"
Power Consumption
515w
Electrical
115 - 230 VAC, 50-60Hz

DATAPARK

HUB

* Photo is overall representation. Peripheral components may vary based on final configuration

Pay Station

Mini Pay Station

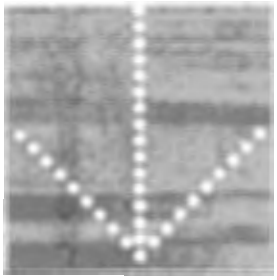

Parking technology DATAPARK

Pay Station

Mini Pay Station

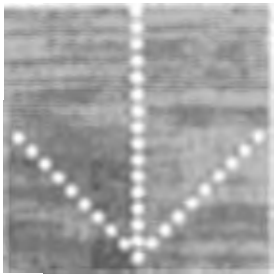

BASE MODEL

- Validator Unit - Maghead & PrinHead
- Bill Acceptor - JCM UBA
- Bill Dispenser - Fujitsu F56 / 2 notes
- Coin Acceptor - NRI
- Coin Hopper - MK4 Universal Hoppers - 3 Units
- 2 Buttons - Receipt & Cancel
- 6.4" Programmable Graphic Display
- Control unit
- Extension board
- Terminal Board
- Voice Board;
- Speaker
- Heater
- Power supply
- Safety Lock
- Keys to Coin Safe, Coin Box, Coin Hoppers, Bill Dispenser & Door

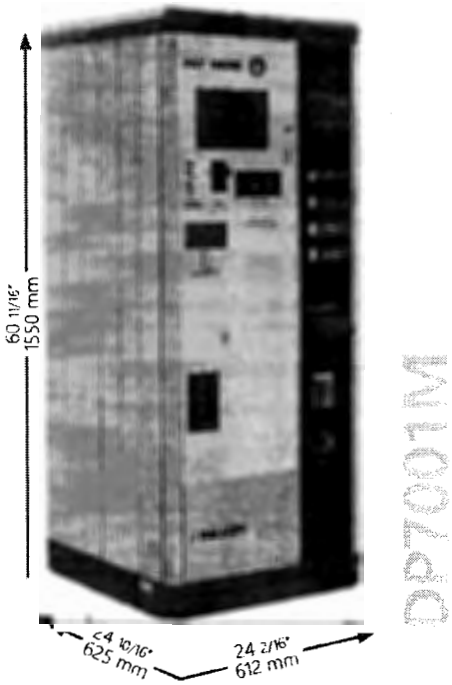

OPTIONS

- No CH3 - Issues 2 nomination of coins
- Without Coins
- Coin Safe Box Spare
- Bill Acceptor - Cash Code
- Bill Dispenser - Fujitsu - Issues 3 Nominations of Notes
- Bill Safe Box Small Spare
- Bill Safe Box Extended Capacity
- 2-way Down Reading of Magstripe Tickets or Cards
- Ticket Loading / Prepay / Cards Encoding / DP5905 Cutter
- Barcode on Maghead / Preprinted Barcode Tickets
- OEM Barcode Scanner - Internal / Print-on-the-fly Operation
- OEM Barcode Scanner - Side Mounted / Print-on-the-fly Operation
- Mini Proximity Reader - Internal /DP810 Included
- Maxi Proximity Reader - Side Mounted / DP810 Included
- Insert Reader - Outdoor - Dual Head
- Journal Printer
- Intercom Button
- Pre-Pay Button
- Lost Ticket Button
- Pay and Display
- Pay By Space
- Custom Color

Multilanguage, Multicurrency, Universal Online (TCP/IP, RS485) or Stand-alone Automatic Mini Pay Station • Bar Code, Magstripe or Combined operation • LPR compatible

Can be used as POF, PIL, Pay By Space and Pay & Display Application

Issues Up to 3 Denomination of Coins • Issues Up to 3 Denomination of Notes

STANDARD FEATURES

- TCP/IP or RS485 Communication Mode
- Voice Assistance
- Display Animation
- Bi-Directional Transport Mechanism with Ticket Retractor
- 2-way Up Reading of Magstripe Tickets and Cards
- Management Reports
- Remote Lost Ticket
- Remote Rate Change
- Negotiable Amounts
- Monthly Payment with Database Interface
- Recharge and Processing Mag Stripe/ Proximity Debit and Usage Cards
- Student Discount Cards
- Refund Vouchers
- 32 Programmable Rates
- 256 Programmable Validations
- Prepays, Refunds, Deposits
- Tax calculation
- Holiday Rates Programming
- Blackout Dates Programming
- Validation Appliance Matrix
- 8 Dual Opto-Isolated Inputs: 4 Relay Outputs (Common, NC/NO Dry Contacts).

Dimensions:
24 10/16 W x 24 2/16" L x 58 11/16" H
625mm W x 612mm L x 1490mm H
Plinth Heights: 2" - 50mm; 7 14/16" - 200mm

Power Consumption: 970W

Parking Technology DATAPARK

DATAPAR
EXIT STATION
Magstripe, Barcode Exit Station
HUB

Base Model

- Validator Unit - PrintHead & MagHead
- Control Unit
- Terminal Board
- Voice Board
- Graphic Display
- Ticket Collection Sack / Approx. 2,000 Tickets
- Ticket Cardboard Box Platform / 10,000 Tickets
- Test Control Panel
- Speaker
- Heater 450W
- Power Supply
- Right Access Door
- Safety Lock and Keys
- All Necessary Cutouts for EMV Contact and Contactless Readers Fitting
- Top and Base: Steel, painted RAL7021 Dark Grey
- Housing: Aluminum, RAL9006 Light Grey

Options

- 2-Way Up Reading of Magstripe Tickets or Cards
- 2-Way Down Reading of Magstripe Tickets or Cards
- Barcode on Maghead / Barcode Tickets
- 2-Way Up Reading of Barcode Tickets
- OEM Barcode Scanner Internal / Print-On-The-Fly Operation
- OEM Barcode Scanner External / Print-On-The-Fly Operation
- Receipt Printer - Internal
- Mini Proximity Reader - Internal
- Maxi Proximity Reader - Side Mounted
- Insert Reader - Outdoor - Dual Head
- Handicap Verifier - Side Mounted
- Sign - Indoor
- Sign - Outdoor
- Intercom Button
- Access Keyboard / No Proximity Reader
- 4-Way Reading
- Custom Color
- Left Access Door
- IP Intercom
- IP Video Camera
- Power Heater 600W

Standard Features

- Online System
- TCP/IP or RS485 Communication Mode
- Programmable Graphic Display
- Bi-Directional Transport Mechanism with Ticket Retractor
- 2-Way Up Reading of Magstripe Tickets and Cards
- Voiding of Tickets
- Backout Logic
- Remote Lost Ticket
- Custom Management Reporting
- Remote Rate Change
- Negotiable Amounts
- Input Programming Logic
- Gateless Count Logic
- Credit Card In / Credit Card Out Option
- Credit Card Payments
- Auto Ticket Receipt
- Credit Card Activated Prepays
- Operator Activated Prepays
- Debit / Usage Magstripe Cards
- Monthly Magstripe Cards
- 256 Access Control Levels
- 32 Programmable Rates
- 256 Programmable Validations
- 64 Time Zones
- Tax Calculation
- Holiday Rates Programming
- Blackout Dates Programming

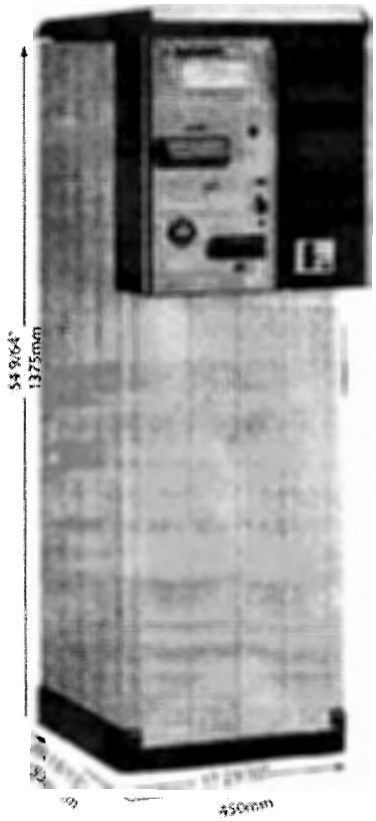

*

Peripheral Dimensions (W x D x H)
450 mm x 532 mm x 1375 mm
17 23/32" x 20 15/16" x 54 9/64"
Power Consumption
515w
Electrical
115 - 230 VAC, 50-60Hz

DATAPARK

HUB

* Photo is overall representation. Peripheral components may vary based on final configuration

Validators & Encoders

Mass Encoder

Parking Technology

DATAPARK

Validators & Encoders

Mass Encoder

BASE MODEL

- Ethernet and web-printing server for remote printing/setting
- Very fast up to 200 mm/s printing speed
- Different ticket width from 20 to 82.5 mm
- Ticket weight from 80 to 255g/m²
- 2 rows integrated display
- 2M cuts sturdy auto-cutter
- Powerful processor 32bit 266MHz
- Up to 32MB RAM on 32MB flash
- 2GB SD card memory expansion slot
- Virtual COM/USB SW emulator
- Power supply on board

STANDARD CHARACTERISTICS

- 1D and 2D barcodes printing: UPC-A, UPC-E, EAN13, EAN8, CODE39, ITF, CODABAR, CODE93, CODE128, CODE32, PDF417, DATAMATRIX, AZTEC, QR CODE
- RS232+USB+Ethernet interface
- Sensors: fully adjustable bottom and top optical sensors for any ticket width. Ticket presence sensor
- The web server gives the flexibility of uploading and downloading fonts and logos over the Internet
- Through the 2Gb SD card or the 8Mb USB mass storage you can easily drag&drop TrueTypeFonts and Logos to be installed on board
- The external power supply is detachable to increase flexibility of installation
- Self-installing Driver for Win2000/XP/ Vista/7, OPOS in Java and .NET, Linux Driver

The DP6100BT Mass Encoder is a state of the art barcode tickets encoding device.
It automatically cuts, encodes and prints barcode tickets to be used as discount coupons or multiple entry passes.
An ideal device for mass encoding a large number of barcode tickets at once.
Thanks to a web interface it is able to serve one or several DATAPARK parking locations from a single encoding station.
The user is able to fine tune different settings to tailor the best fitting solution for each parking area providing advantages for the client while managing everything from one control console.

Dimensions

- 52,1 (L) x 192,6 (H) x 216 (W) mm
  9,9 (L) x 7,5 (H) x 8,5 (W) inches
- Weight: 4kg - 8,8lbs

Power

- 100-240 VAC, 50-60Hz
- Absorbed power: 100W

Environment

- Ambient Temperature: 0°C to 50°C

DP6100BT

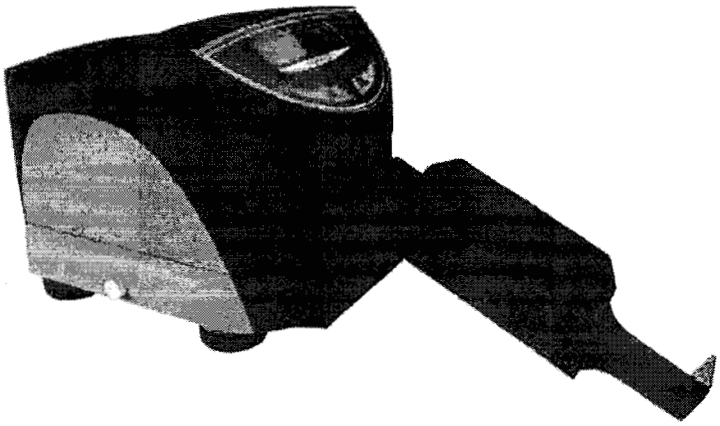

Validators & Encoders

Hotel Encoder

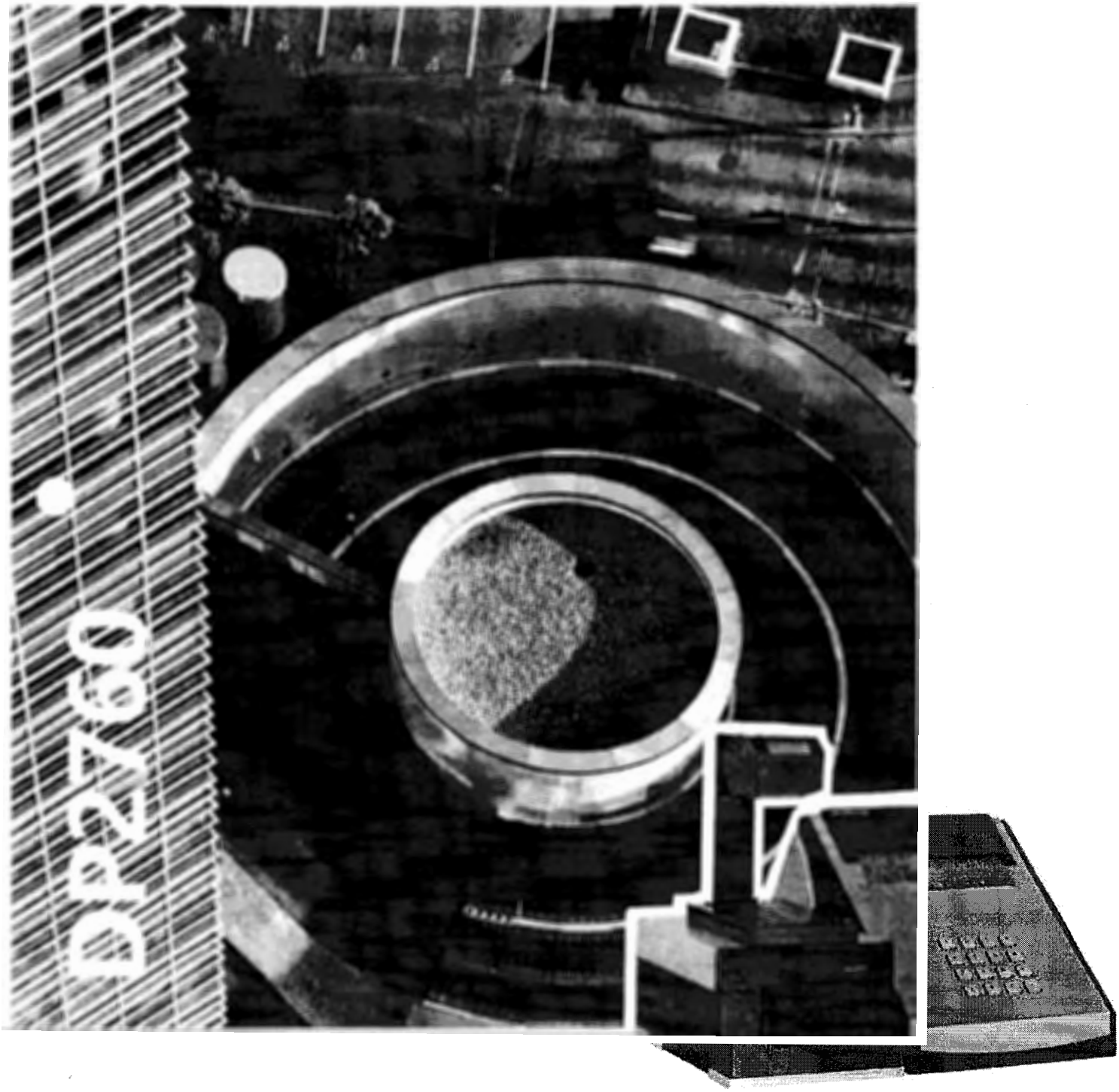

Parking technology DATAPARK

Validators & Encoders

Hotel Encoder

BASE MODEL
Graphic Display
16-character Keypad
DP100 & Power Supply
No Power Cable

OPTIONS
With Magstripe Encoder
With BarCode Reader
With Magstripe Encoder & BarCode Reader

Magnetic stripe reading and writing device. It encodes mag stripe tickets and plastic mag stripe card cards. It is also used for setting expiration of Hotel Valet Bar Code tickets. The control unit inputs the data for the encoding and also process es and calculates transient parking fee tickets.

Unit connects to a COM Port and includes validator and software. Encoding operations reports are available for auditing purposes. It has LCD display and sixteen character keypad.

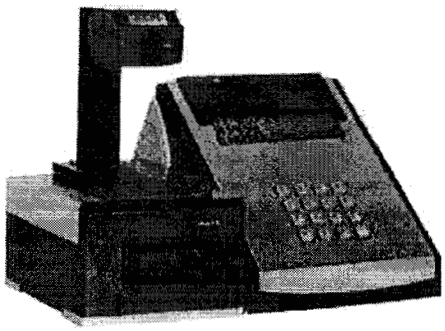

DP2750

Parking Technology DATAPARK

DATASHEET - 800MKL

secure intercom

800MKL VoIP Intercom Module

- Plug and Play
- Standard VoIP Protocol
- Message on Hold
- Flexable Dial Plan
- 3 watt Amp
- Dual Network Switch with PoE
- Skinny Bandwidth Support
- 2 Relay Ouputs
- Rugged Construction
- Multi Voltage
- 2 Way Audio Out for 3rd Party Recording
- Supported By Most VoIP systems
- Exchangless Functionality
- Optional Phone Line Backup
- Optional Battery Backup
- Status Indicators
- Compatible with most leading brand VoIP exchanges including:

  Cisco
  Nortel
  Avaya
  Commend

Configuration support available on request

800MKL

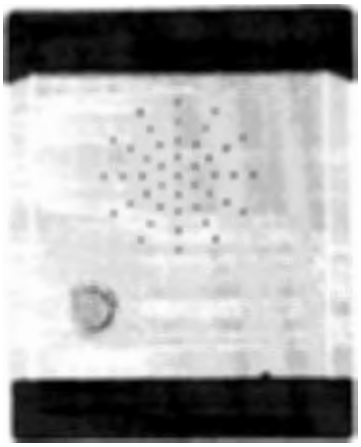

801D Optional Surface Mount Door Panel

Includes

800MKL Intercom Module
Bulkhead Mic with 600mm cable
Mounting Template
CD with
SI Finder Software
Free Soft Phone Software
User Manual

Accessories

Selection of Door Panels
Rail Mounting Bracket
Selection of Speakers

Sales or Support Enquiries
Ph: +61 3 90087020
Ph: +1 6178070921
[illegible]

Head Office:
Unit 5 21-25 Redland Drive
Mitcham, Victoria, Australia

www.secureintercom.com
Global Connections

Product may change in the interest of [illegible] without notice.
All trademarks remain proper[illegible] of their respective owners.

Division of online SECURITY

From : Lazar Milanov
Regional Account Manager
HUB Parking Technology USA, Inc.
627 N. Albany, Suite #141 ,Chicago, IL 60612

Align top of FedEx Express

FedEx Express

ORIGIN ID:GYYA (312) 629-7295
LAZAR MILANOV
HUB PARKING TECHNOLOGY USA
627 N ALBANY
SUITE 141
CHICAGO, IL 60612
UNITED STATES US

TO PURCHASING DEPARTM
ATTN: CALE TURNER CP
701 E BROADWAY
5TH FLOOR
COLUMBIA MO 65201
(000) 000 - 0000 REF:

To : Purchasing Department
Att. Cale Turner, CPPB
Purchasing Agent
701 E. Broadway, 5" Floor.
Columbia, MO 65201
"RFP 5/2016 Parking Utility Software."

15/2016

10-21-16 10:17 RCVD

146 4 10/30 B 10/21

TRK# 7844 1497 7071
0201

NA COUA

Align bottom of peel-a-

Exhibit L
Reused Pricing

City of Columbia

Quote Number: LIFMQ1087-10
Date: 5/12/17

Parking Technology DATAPARK

Lazar Milanov
Regional Account Manager
3126237275 Ext.
lazar.milanov@hubparking.com

HUB Parking Technology
a Business Unit of the FAAC Group

HUB Parking Technology USA, Inc.
627 N Albany Ave., Suite 141
Chicago, IL 60612
www.hubparking.us

Parking Technology HUB

QUOTE

Number LIFMQ1087-10
Date May 12, 2017

Customer	Project / Job
City of Columbia MELISSA PASLEY 701 E. BROADWAY, 5TH FLOOR Columbia, MO 65201	City of Columbia MELISSA PASLEY 701 E. BROADWAY, 5TH FLOOR Columbia, MO 65201

Presented By	Valid Through	Ship Via	Terms
Lazar Milanov	1/1/18	Best Way	50/40/10

Qty	Item	Description	Unit Price	Ext. Price
		HUB Parking Technology USA Inc. response to RFP # No: 157/2016. Installing new DataPark Barcode PARC System at City of Columbia Parking Facilities . Revised on 5-12-2017		
		HUB Management Software and server		
		FACILITY MANAGMENT COMPONENTS		
		DP 11000 PARCS Software		
1	2500.G00001	DP11000 Software License Packet		
1	NETEPAY ML	PARCS Credit Crd Processing, Multi-lane Software		
1		Integration with Third Party Web Reservation Systems (Park Mobile , Spot Hero . Click & Park, Park Whiz, Parking Panda, Best Parking , Parking Jokey,)		
1		Intergation with the City Current pre -paid cards (inlcuding McKey Development cost)		
		Facility Management Hardware		
0	R530	High End DP11000/JMS Combination (Rack Mountable)		
0	A7639351	SQL Server Std		
0	SG300-10PP	SG302-10P..Cisco SRW2008P-K9-NA 10-port 10/100 PoE Managed Switch		
0	A3851973	SmartRack 12U Wall Mount Rack Enclosure Cabinet with Plexiglass Front Door Insert		
0	E2214H	17" LCD Monitor		
0	1598763	Printers HP P2035 LaserJet (CDW 1598763)		
1		License for one work station for Parking Office		
6	02-114447	Elastix NLX Mini UCS Appliance -2FXS/2FXO		
50	13-17XX-XXXX	Multi uses NedAp RFID hang tag,		
		DP 6001 Mass Encoder		
1		DP 6001 Barcode Mass Encoder		

Continued on next page

Qty	Item	Description	Unit Price	Ext. Price
		INSTALLATIONA ND MOBILIZATION **HUB Installation** **-Install hardware and software** **-Configure and commission system software** **-Train Operator users**		
1		HUB Installation		
		SubTotal HUB Management Software and server		$61,078.44
		Short Street Garage		
		ENTRY AND EXIT LANE EQUIPMENT		
		DP 5900-6 EMV Ready Barcode Entry Station		
1	LEDP100003	Entry Station Base platform EMV Ready (DP5900)		
1	LEDP111001B	LCD Graphic display EMV Ready		
1	800MKL	Secure VoIP Intercom Module		
1	LXDP271001	Magtek Credit Card Insertion Reader		
1	LEDP231001	Single Ticket Issue Button		
1	LEDP231003	Intercom Button		
1	LEDP311001	Voice Announcer		
1	LXDP301001	2D scan Honeywell 3310g under f. panel		
		DP 5800-6 EMV Ready Barcode Exit Station		
1	LXDP100003	Exit Station Base platform EMV Ready (DP5800)		
1	LXDP111001	LCD graphic display		
1	LXDP121002	Receipt Printer Axiom - int mounted		
1	800MKL	Secure VoIP Intercom Module		
1	LXDP231002	Receipt/Cancel Button		
1	LXDP231003	Intercom Button		
1	LXDP301001	2D scan Honeywell 3310g under f. panel		
1	LXDP311001	Voice Announcer		
1	LXDP271001	Magtek Credit Card Insertion Reader		
1		MacKey Reader with control board for the City pre-paid parking cards		
		NedAp RFID Readers with Hangtags		
2	9945466	NedAp Gen 2 Transit UHF Reader.		
2	7591152	Weather Hood		
2	9875840	ACCESSORY - Gen 2 Transit UHF Adjustable Mounting Set for TRANSIT or uPASS Reach - for Pole or Wall		
2	9943803	ACCESSORY - UHF Pole Mounting Kit (cap mount 1 3/4" diameter pole)		
6		HUB Installation 3 hours per reader		
400	13-17XX-XXXX	NedAp RFID hang tag,		
		HUB Model Tall Parking.Pro Barrier Gate		

Continued on next page

Qty	Item	Description	Unit Price	Ext. Price
2	HUB PRO-M-LC010H0	HUB Model Tall Parking.Pro Barrier Gate w/ 10' Microboom, Fixed Flange, Light Grey, Left Hand		
2	KBB01c	Parts to Convert Straight to Art (8.2 ft clearance-bottom of boom to bottom of gate)		
4		Sawcut Vehicle Detector Loop - Hook-up to barrier gate Includes: Sawcut, wire and seal approximately 6 x 3' (18 Linear ft plus lead in)		
		PAY-ON-FOOT EQUIPMENT		
2	APMDP100001	Base platform		
2	APMDP111003	Color LCD 6,4 "		
2	APMDP181002	115 Volt Power Supply and Heater		
2	APMDP411002	BISCUIT + DP6020		
2	APMDP121002	Axiom Receipt Printer - int. Mounted		
2	APMDP131000	No Printing Unit		
2	APMDP141000	No Magnetic Head		
2	APMDP151005	No Magnetic Stripe Encoding		
2	APMDP171000	Housing color standard		
2	APMDP161000	Overlayr standard		
2	APMDP185002	TCP/IP		
2	APMDP191000	No Keypad		
2	APMDP201003	VoIP Secure Intercom 800M (Bracket Only)		
2	APMDP231003	Intercom Button		
2	APMDP231004	Cancel Button		
2	APMDP231007	Lost Ticket Button		
2	APMDP251001	NRI Eagle		
2	APMDP261001	UBA10-SS 500 notes Bill Validator		
2	APMDP351002	MK4 Coin hopper - 3 Coins		
2	APMDP291001	No Notes Dispenser		
2	APMDP361000	No Fiscal Printer		
2	APMDP301001	Honey 3310g 2D scan under front panel		
2	APMDP311001	Voice Announcer		
2	APMDP321000	No IP Camera		
2	APMDP331003	Front Door		
2	APMDP381002	DP591		
2	APMDP420001	50 mm standard color		
2	LXDP271001	Magtek Credit Card Insertion Reader		
2	800MKL	Secure VoIP Intercom Module		
2		MacKey Reader with control board for the City pre-paid parking cards		
		DP substation and additional hardware		
0	SG300-10PP	SG302-10P..Cisco SRW2008P-K9-NA 10-port 10/100 PoE Managed Switch		
0	A3851973	SmartRack 12U Wall Mount Rack Enclosure Cabinet with Plexiglass Front Door Insert		
0		DP Sub station Server with LCD monitor, Windows 7, 16GB of RAM, 2xSSD hard drives and RAID 1 configuration. All Licenses included.		
		DP 2760 Barcode Hotel Encoder with RFID Readers		
1	VALONDP100001	Base Platform		

Continued on next page

Qty	Item	Description	Unit Price	Ext. Price
1	VALONDP181002	115 Volt Power Supply and Heater		
1	FCDP301003	TRAY STAND&MK3480 BARCODE		
1	VALHOTDP121009	Barcode printer TK302		
2		RFID Hotel Reader		
		INSTALLATION AND MOBILIZATION **HUB Installation** **-Install system and make all final terminations** **-Configure and commission system software** **-Train Operator users**		
1		HUB Installation including electrical / wiring by MME Inc,		
		Total Short Street Garage Cost		$104,974.29
		Plaza Garage		
		ENTRY AND EXIT LANE EQUIPMENT		
		DP 5900-6 EMV Ready Barcode Entry Station		
2	LEDP100003	Entry Station Base platform EMV Ready (DP5900)		
2	LEDP111001B	LCD Graphic display EMV Ready		
2	800MKL	Secure VoIP Intercom Module		
2	LXDP271001	Magtek Credit Card Insertion Reader		
2	LEDP231001	Single Ticket Issue Button		
2	LEDP231003	Intercom Button		
2	LEDP311001	Voice Announcer		
2	LXDP301001	2D scan Honeywell 3310g under f. panel		
		DP 5800-6 EMV Ready Barcode Exit Station		
2	LXDP100003	Exit Station Base platform EMV Ready (DP5800)		
2	LXDP111001	LCD graphic display		
2	LXDP121002	Receipt Printer Axiom - int mounted		
2	800MKL	Secure VoIP Intercom Module		
0	LXDP211001	HID Mini Prox 5365EGP04		
2	LXDP231002	Receipt/Cancel Button		
2	LXDP231003	Intercom Button		
2	LXDP301001	2D scan Honeywell 3310g under f. panel		
2	LXDP311001	Voice Announcer		
2	LXDP271001	Magtek Credit Card Insertion Reader		
2		MacKey Reader with control board for the City pre-paid parking cards		
		NedAp RFID Readers with Hangtags		
4	9945466	NedAp Gen 2 Transit UHF Reader.		

Continued on next page

Qty	Item	Description	Unit Price	Ext. Price
4	7591152	Weather Hood		
4	9875840	ACCESSORY - Gen 2 Transit UHF Adjustable Mounting Set for TRANSIT or uPASS Reach - for Pole or Wall		
4	9943803	ACCESSORY - UHF Pole Mounting Kit (cap mount 1 3/4" diameter pole)		
12		HUB Installation 3 hours per reader		
300	13-17XX-XXXX	NedAp RFID hang tag,		
		HUB Model Tall Parking.Pro Barrier Gate		
4	HUB PRO-M-LC010H0	HUB Model Tall Parking.Pro Barrier Gate w/ 10' Microboom, Fixed Flange, Light Grey, Left Hand		
4	KBB01c	Parts to Convert Straight to Art (8.2 ft clearance-bottom of boom to bottom of gate)		
8		Sawcut Vehicle Detector Loop - Hook-up to barrier gate Includes: Sawcut, wire and seal approximately 6' x 3' (18 Linear ft plus lead in)		
		PAY-ON-FOOT EQUIPMENT		
2	APMDP100001	Base platform		
2	APMDP111003	Color LCD 6,4 "		
2	APMDP181002	115 Volt Power Supply and Heater		
2	APMDP411002	BISCUIT + DP6020		
2	APMDP121002	Axiom Receipt Printer - int. Mounted		
2	APMDP131000	No Printing Unit		
2	APMDP141000	No Magnetic Head		
2	APMDP151005	No Magnetic Stripe Encoding		
2	APMDP171000	Housing color standard		
2	APMDP161000	Overlayr standard		
2	APMDP185002	TCP/IP		
2	APMDP191000	No Keypad		
2	APMDP201003	VoIP Secure Intercom 800M (Bracket Only)		
2	APMDP211000	No Proximity Reader		
2	APMDP231003	Intercom Button		
2	APMDP231004	Cancel Button		
2	APMDP231007	Lost Ticket Button		
2	APMDP251001	NRI Eagle		
2	APMDP261001	UBA10-SS 500 notes Bill Validator		
2	APMDP351002	MK4 Coin hopper - 3 Coins		
0	APMDP291001	No Notes Dispenser		
2	APMDP361000	No Fiscal Printer		
2	APMDP301001	Honey 3310g 2D scan under front panel		
2	APMDP311001	Voice Announcer		
2	APMDP321000	No IP Camera		
2	APMDP331003	Front Door		
2	APMDP381002	DP591		
2	APMDP420001	50 mm standard color		
2	LXDP271001	Magtek Credit Card Insertion Reader		
2	800MKL	Secure VoIP Intercom Module		
2		MacKey Reader with control board for the City pre-paid parking cards		
		DP substation and additional hardware		
0	SG300-10PP	SG302-10P..Cisco SRW2008P-K9-NA 10-port 10/100 PoE Managed Switch		

Continued on next page

Qty	Item	Description	Unit Price	Ext. Price
0	A3851973	SmartRack 12U Wall Mount Rack Enclosure Cabinet with Plexiglass Front Door Insert		
0		DP Sub station Server with LCD monitor, Windows 7, 16GB of RAM, 2xSSD hard drives and RAID 1 configuration. All Licenses included.		
		INSTALLATION AND MOBILIZATION **HUB Installation** **-Install system and make all final terminations** **-Configure and commission system software** **-Train Operator users**		
1		HUB Installation including electrical / wiring by MME Inc,		
		Total Plaza Garage Cost		$130,498.97
		5th & Walnut Garage		
		ENTRY AND EXIT LANE EQUIPMENT		
		DP 5900-6 EMV Ready Barcode Entry Station		
2	LEDP100003	Entry Station Base platform EMV Ready (DP5900)		
2	LEDP111001B	LCD Graphic display EMV Ready		
2	800MKL	Secure VoIP Intercom Module		
2	LXDP271001	Magtek Credit Card Insertion Reader		
2	LEDP231001	Single Ticket Issue Button		
2	LEDP231003	Intercom Button		
2	LEDP311001	Voice Announcer		
2	LXDP301001	2D scan Honeywell 3310g under f. panel		
		DP 5800-6 EMV Ready Barcode Exit Station		
1	LXDP100003	Exit Station Base platform EMV Ready (DP5800)		
1	LXDP111001	LCD graphic display		
1	LXDP121002	Receipt Printer Axiom - int mounted		
1	800MKL	Secure VoIP Intercom Module		
0	LXDP211001	HID Mini Prox 5365EGP04		
1	LXDP231002	Receipt/Cancel Button		
1	LXDP231003	Intercom Button		
1	LXDP301001	2D scan Honeywell 3310g under f. panel		
1	LXDP311001	Voice Announcer		
1	LXDP271001	Magtek Credit Card Insertion Reader		
1		MacKey Reader with control board for the City pre-paid parking cards		
		NedAp RFID Readers with Hangtags		
3	7591152	Weather Hood		
3	9875840	ACCESSORY - Gen 2 Transit UHF Adjustable Mounting Set for TRANSIT or uPASS Reach - for Pole or Wall		
3	9943803	ACCESSORY - UHF Pole Mounting Kit (cap mount 1 3/4" diameter pole)		
9		HUB Installation 3 hours per reader		

Continued on next page

Qty	Item	Description	Unit Price	Ext. Price
700	13-17XX-XXXX	NedAp RFID hang tag,		
		HUB Model Tall Parking.Pro Barrier Gate		
3	HUB PRO-M-LC010H0	HUB Model Tall Parking.Pro Barrier Gate w/ 10' Microboom, Fixed Flange, Light Grey, Left Hand		
3	KBB01c	Parts to Convert Straight to Art (8.2 ft clearance-bottom of boom to bottom of gate)		
6		Sawcut Vehicle Detector Loop - Hook-up to barrier gate Includes: Sawcut, wire and seal approximately 8' x 6' (28 Linear ft plus lead in)		
		PAY-ON-FOOT EQUIPMENT		
2	APMDP100001	Base platform		
2	APMDP111003	Color LCD 6,4 "		
2	APMDP181002	115 Volt Power Supply and Heater		
2	APMDP411002	BISCUIT + DP6020		
2	APMDP121002	Axiom Receipt Printer - int. Mounted		
2	APMDP131000	No Printing Unit		
2	APMDP141000	No Magnetic Head		
2	APMDP151005	No Magnetic Stripe Encoding		
2	APMDP171000	Housing color standard		
2	APMDP161000	Overlayr standard		
2	APMDP185002	TCP/IP		
2	APMDP191000	No Keypad		
2	APMDP201003	VoIP Secure Intercom 800M (Bracket Only)		
2	APMDP211000	No Proximity Reader		
2	APMDP231003	Intercom Button		
2	APMDP231004	Cancel Button		
2	APMDP231007	Lost Ticket Button		
2	APMDP251001	NRI Eagle		
2	APMDP261001	UBA10-SS 500 notes Bill Validator		
2	APMDP351002	MK4 Coin hopper - 3 Coins		
0	APMDP291001	No Notes Dispenser		
2	APMDP361000	No Fiscal Printer		
2	APMDP301001	Honey 3310g 2D scan under front panel		
2	APMDP311001	Voice Announcer		
2	APMDP321000	No IP Camera		
2	APMDP331003	Front Door		
2	APMDP381002	DP591		
2	APMDP420001	50 mm standard color		
2	LXDP271001	Magtek Credit Card Insertion Reader		
2	800MKL	Secure VoIP Intercom Module		
2		MacKey Reader with control board for the City pre-paid parking cards		
		DP substation and additional hardware		
0	SG300-10PP	SG302-10P..Cisco SRW2008P-K9-NA 10-port 10/100 PoE Managed Switch		
0	A3851973	SmartRack 12U Wall Mount Rack Enclosure Cabinet with Plexiglass Front Door Insert		
0		DP Sub station Server with LCD monitor, Windows 7, 16GB of RAM, 2xSSD hard drives and RAID 1 configuration. All Licenses included.		

Continued on next page

Qty	Item	Description	Unit Price	Ext. Price
		INSTALLATION AND MOBILIZATION **HUB Installation** **-Install system and make all final terminations** **-Configure and commission system software** **-Train Operator users**		
1		HUB Installation including electrical / wiring by MME Inc,		
		Total 5th & Walnut Garage Cost		$126,036.13
		6th & Cherry Garage		
		ENTRY AND EXIT LANE EQUIPMENT		
		DP 5900-6 EMV Ready Barcode Entry Station		
2	LEDP100003	Entry Station Base platform EMV Ready (DP5900)		
2	LEDP111001B	LCD Graphic display EMV Ready		
2	800MKL	Secure VoIP Intercom Module		
2	LXDP271001	Magtek Credit Card Insertion Reader		
2	LEDP231001	Single Ticket Issue Button		
2	LEDP231003	Intercom Button		
2	LEDP311001	Voice Announcer		
2	LXDP301001	2D scan Honeywell 3310g under f. panel		
		DP 5800-6 EMV Ready Barcode Exit Station		
1	LXDP100003	Exit Station Base platform EMV Ready (DP5800)		
1	LXDP111001	LCD graphic display		
1	LXDP121002	Receipt Printer Axiom - int mounted		
1	800MKL	Secure VoIP Intercom Module		
0	LXDP211001	HID Mini Prox 5365EGP04		
1	LXDP231002	Receipt/Cancel Button		
1	LXDP231003	Intercom Button		
1	LXDP301001	2D scan Honeywell 3310g under f. panel		
1	LXDP311001	Voice Announcer		
1	LXDP271001	Magtek Credit Card Insertion Reader		
1		MacKey Reader with control board for the City pre-paid parking cards		
		NedAp RFID Readers with Hangtags		
3	9945466	NedAp Gen 2 Transit UHF Reader.		
3	9945466	NedAp Gen 2 Transit UHF Reader.		
3	7591152	Weather Hood		
3	9875840	ACCESSORY - Gen 2 Transit UHF Adjustable Mounting Set for TRANSIT or uPASS Reach - for Pole or Wall		
3	9943803	ACCESSORY - UHF Pole Mounting Kit (cap mount 1 3/4" diameter pole)		
9		HUB Installation 3 hours per reader		
350	13-17XX-XXXX	NedAp RFID hang tag,		

Continued on next page

Qty	Item	Description	Unit Price	Ext. Price
		HUB Model Tall Parking.Pro Barrier Gate		
3	HUB PRO-M-LC010H0	HUB Model Tall Parking.Pro Barrier Gate w/ 10' Microboom, Fixed Flange, Light Grey, Left Hand		
3	KBB01c	Parts to Convert Straight to Art (8.2 ft clearance-bottom of boom to bottom of gate)		
6		Sawcut Vehicle Detector Loop - Hook-up to barrier gate Includes: Sawcut, wire and seal approximately 6' x 3' (18 Linear ft plus lead in)		
		PAY-ON-FOOT EQUIPMENT		
2	APMDP100001	Base platform		
2	APMDP111003	Color LCD 6,4 "		
2	APMDP181002	115 Volt Power Supply and Heater		
2	APMDP411002	BISCUIT + DP6020		
2	APMDP121002	Axiom Receipt Printer - int. Mounted		
2	APMDP131000	No Printing Unit		
2	APMDP141000	No Magnetic Head		
2	APMDP151005	No Magnetic Stripe Encoding		
2	APMDP171000	Housing color standard		
2	APMDP161000	Overlayr standard		
2	APMDP185002	TCP/IP		
2	APMDP191000	No Keypad		
2	APMDP201003	VoIP Secure Intercom 800M (Bracket Only)		
2	APMDP211000	No Proximity Reader		
2	APMDP231003	Intercom Button		
2	APMDP231004	Cancel Button		
2	APMDP231007	Lost Ticket Button		
2	APMDP251001	NRI Eagle		
2	APMDP261001	UBA10-SS 500 notes Bill Validator		
2	APMDP351002	MK4 Coin hopper - 3 Coins		
0	APMDP291001	No Notes Dispenser		
2	APMDP361000	No Fiscal Printer		
2	APMDP301001	Honey 3310g 2D scan under front panel		
2	APMDP311001	Voice Announcer		
2	APMDP321000	No IP Camera		
2	APMDP331003	Front Door		
2	APMDP381002	DP591		
2	APMDP420001	50 mm standard color		
2	LXDP271001	Magtek Credit Card Insertion Reader		
2	800MKL	Secure VoIP Intercom Module		
2		MacKey Reader with control board for the City pre-paid parking cards		
		DP substation and additional hardware		
0	SG300-10PP	SG302-10P..Cisco SRW2008P-K9-NA 10-port 10/100 PoE Managed Switch		
0	A3851973	SmartRack 12U Wall Mount Rack Enclosure Cabinet with Plexiglass Front Door Insert		
0		DP Sub station Server with LCD monitor, Windows 7, 16GB of RAM, 2xSSD hard drives and RAID 1 configuration. All Licenses included.		

Continued on next page

Qty	Item	Description	Unit Price	Ext. Price
		INSTALLATION AND MOBILIZATION **HUB Installation** **-Install system and make all final terminations** **-Configure and commission system software** **-Train Operator users**		
1		HUB Installation including electrical / wiring by MME Inc,		
		Total 6th & Cherry Garage Cost		$127,650.72
		10th & Cherry Garage Garage		
		ENTRY AND EXIT LANE EQUIPMENT		
		DP 5900-6 EMV Ready Barcode Entry Station		
2	LEDP100003	Entry Station Base platform EMV Ready (DP5900)		
2	LEDP111001B	LCD Graphic display EMV Ready		
2	800MKL	Secure VoIP Intercom Module		
1	LXDP271001	Magtek Credit Card Insertion Reader		
2	LEDP231001	Single Ticket Issue Button		
2	LEDP231003	Intercom Button		
2	LEDP311001	Voice Announcer		
2	LXDP301001	2D scan Honeywell 3310g under f. panel		
		DP 5800-6 EMV Ready Barcode Exit Station		
2	LXDP100003	Exit Station Base platform EMV Ready (DP5800)		
2	LXDP111001	LCD graphic display		
2	LXDP121002	Receipt Printer Axiom - int mounted		
2	800MKL	Secure VoIP Intercom Module		
0	LXDP211001	HID Mini Prox 5365EGP04		
2	LXDP231002	Receipt/Cancel Button		
2	LXDP231003	Intercom Button		
2	LXDP301001	2D scan Honeywell 3310g under f. panel		
12	LXDP311001	Voice Announcer		
2	LXDP271001	Magtek Credit Card Insertion Reader		
2		MacKey Reader with control board for the City pre-paid parking cards		
		NedAp RFID Readers with Hangtags		
4	9945466	NedAp Gen 2 Transit UHF Reader.		
4	7591152	Weather Hood		
4	9875840	ACCESSORY - Gen 2 Transit UHF Adjustable Mounting Set for TRANSIT or uPASS Reach - for Pole or Wall		
4	9943803	ACCESSORY - UHF Pole Mounting Kit (cap mount 1 3/4" diameter pole)		
12		HUB Installation 3 hours per reader		
200	13-17XX-XXXX	NedAp RFID hang tag,		

Continued on next page

Qty	Item	Description	Unit Price	Ext. Price
		HUB Model Tall Parking.Pro Barrier Gate		
4	HUB PRO-M-LC010H0	HUB Model Tall Parking.Pro Barrier Gate w/ 10' Microboom, Fixed Flange, Light Grey, Left Hand		
4	KBB01c	Parts to Convert Straight to Art (8.2 ft clearance-bottom of boom to bottom of gate)		
8		Sawcut Vehicle Detector Loop - Hook-up to barrier gate Includes: Sawcut, wire and seal approximately 6' x 3' (18 Linear ft plus lead in)		
		PAY-ON-FOOT EQUIPMENT		
2	APMDP100001	Base platform		
2	APMDP111003	Color LCD 6,4 "		
2	APMDP181002	115 Volt Power Supply and Heater		
2	APMDP411002	BISCUIT + DP6020		
2	APMDP121002	Axiom Receipt Printer - int. Mounted		
2	APMDP131000	No Printing Unit		
2	APMDP141000	No Magnetic Head		
2	APMDP151005	No Magnetic Stripe Encoding		
2	APMDP171000	Housing color standard		
2	APMDP161000	Overlayr standard		
2	APMDP185002	TCP/IP		
2	APMDP191000	No Keypad		
2	APMDP201003	VoIP Secure Intercom 800M (Bracket Only)		
2	APMDP211000	No Proximity Reader		
2	APMDP231003	Intercom Button		
2	APMDP231004	Cancel Button		
2	APMDP231007	Lost Ticket Button		
2	APMDP251001	NRI Eagle		
2	APMDP261001	UBA10-SS 500 notes Bill Validator		
2	APMDP351002	MK4 Coin hopper - 3 Coins		
0	APMDP291001	No Notes Dispenser		
2	APMDP361000	No Fiscal Printer		
2	APMDP301001	Honey 3310g 2D scan under front panel		
2	APMDP311001	Voice Announcer		
2	APMDP321000	No IP Camera		
2	APMDP331003	Front Door		
2	APMDP381002	DP591		
2	APMDP420001	50 mm standard color		
		Note - LM- Elimitated EMV Readers.		
2	LXDP271001	Magtek Credit Card Insertion Reader		
2	800MKL	Secure VoIP Intercom Module		
2		MacKey Reader with control board for the City pre-paid parking cards		
		DP substation and additional hardware		
0	SG300-10PP	SG302-10P..Cisco SRW2008P-K9-NA 10-port 10/100 PoE Managed Switch		
0	A3851973	SmartRack 12U Wall Mount Rack Enclosure Cabinet with Plexiglass Front Door Insert		
0		DP Sub station Server with LCD monitor, Windows 7, 16GB of RAM, 2xSSD hard drives and RAID 1 configuration. All Licenses included.		

Continued on next page

Qty	Item	Description	Unit Price	Ext. Price
		INSTALLATION AND MOBILIZATION **HUB Installation** **-Install system and make all final terminations** **-Configure and commission system software** **-Train Operator users**		
1		HUB Installation including electrical / wiring by MME Inc,		
		Total 10th & Cherry Garage Cost		$93,395.22
		8th & Cherry Garage		
		ENTRY AND EXIT LANE EQUIPMENT		
		DP 5900-6 EMV Ready Barcode Entry Station		
1	LEDP100003	Entry Station Base platform EMV Ready (DP5900)		
1	LEDP111001B	LCD Graphic display EMV Ready		
1	800MKL	Secure VoIP Intercom Module		
1	LXDP271001	Magtek Credit Card Insertion Reader		
1	LEDP231001	Single Ticket Issue Button		
1	LEDP231003	Intercom Button		
1	LEDP311001	Voice Announcer		
1	LXDP301001	2D scan Honeywell 3310g under f. panel		
		DP 5800-6 EMV Ready Barcode Exit Station		
1	LXDP100003	Exit Station Base platform EMV Ready (DP5800)		
1	LXDP111001	LCD graphic display		
1	LXDP121002	Receipt Printer Axiom - int mounted		
1	800MKL	Secure VoIP Intercom Module		
0	LXDP211001	HID Mini Prox 5365EGP04		
1	LXDP231002	Receipt/Cancel Button		
1	LXDP231003	Intercom Button		
1	LXDP301001	2D scan Honeywell 3310g under f. panel		
1	LXDP311001	Voice Announcer		
1	LXDP271001	Magtek Credit Card Insertion Reader		
1		MacKey Reader with control board for the City pre-paid parking cards		
		NedAp RFID Readers with Hangtags		
2	9945466	NedAp Gen 2 Transit UHF Reader.		
2	7591152	Weather Hood		
2	9875840	ACCESSORY - Gen 2 Transit UHF Adjustable Mounting Set for TRANSIT or uPASS Reach - for Pole or Wall		
2	9943803	ACCESSORY - UHF Pole Mounting Kit (cap mount 1 3/4" diameter pole)		
6		HUB Installation 3 hours per reader		
200	13-17XX-XXXX	NedAp RFID hang tag,		

Continued on next page

Qty	Item	Description	Unit Price	Ext. Price
		HUB Model Tall Parking.Pro Barrier Gate		
2	HUB PRO-M-LC010H0	HUB Model Tall Parking.Pro Barrier Gate w/ 10' Microboom, Fixed Flange, Light Grey, Left Hand		
2	KBB01c	Parts to Convert Straight to Art (8.2 ft clearance-bottom of boom to bottom of gate)		
4		Sawcut Vehicle Detector Loop - Hook-up to barrier gate Includes: Sawcut, wire and seal approximately 6' x 3' (18 Linear ft plus lead in)		
		PAY-ON-FOOT EQUIPMENT		
2	APMDP100001	Base platform		
2	APMDP111003	Color LCD 6,4 "		
2	APMDP181002	115 Volt Power Supply and Heater		
2	APMDP411002	BISCUIT + DP6020		
2	APMDP121002	Axiom Receipt Printer - int. Mounted		
2	APMDP131000	No Printing Unit		
2	APMDP141000	No Magnetic Head		
2	APMDP151005	No Magnetic Stripe Encoding		
2	APMDP171000	Housing color standard		
2	APMDP161000	Overlayr standard		
2	APMDP185002	TCP/IP		
2	APMDP191000	No Keypad		
2	APMDP201003	VoIP Secure Intercom 800M (Bracket Only)		
2	APMDP211000	No Proximity Reader		
2	APMDP231003	Intercom Button		
2	APMDP231004	Cancel Button		
2	APMDP231007	Lost Ticket Button		
2	APMDP251001	NRI Eagle		
2	APMDP261001	UBA10-SS 500 notes Bill Validator		
2	APMDP351002	MK4 Coin hopper - 3 Coins		
0	APMDP291001	No Notes Dispenser		
2	APMDP361000	No Fiscal Printer		
2	APMDP301001	Honey 3310g 2D scan under front panel		
2	APMDP311001	Voice Announcer		
2	APMDP321000	No IP Camera		
2	APMDP331003	Front Door		
2	APMDP381002	DP591		
2	APMDP420001	50 mm standard color		
2	LXDP271001	Magtek Credit Card Insertion Reader		
2	800MKL	Secure VoIP Intercom Module		
2		MacKey Reader with control board for the City pre-paid parking cards		
		DP substation and additional hardware		
0	SG300-10PP	SG302-10P..Cisco SRW2008P-K9-NA 10-port 10/100 PoE Managed Switch		
0	A3851973	SmartRack 12U Wall Mount Rack Enclosure Cabinet with Plexiglass Front Door Insert		
0		DP Sub station Server with LCD monitor, Windows 7, 16GB of RAM, 2xSSD hard drives and RAID 1 configuration. All Licenses included.		

Continued on next page

Qty	Item	Description	Unit Price	Ext. Price
		INSTALLATION AND MOBILIZATION **HUB Installation** **-Install system and make all final terminations** **-Configure and commission system software** **-Train Operator users**		
1		HUB Installation including electrical / wiring by MME Inc,		
		Total 8th & Cherry Garage Cost		$96,746.44
		Running SubTotal		$776,626.92
		Upgrade the proposed DP 11000 PARCS Software to JMS		
1		Upgrade the proposed DP 11000 PARCS Software to JMS .-JMS Upgrade To be ordered with the initial equipment order. Including installation .Total 18 peripherals (8 entry stations / 6 exit station / 12 Pay Station / 2 DP 1400 / 1 Hotel Encoder / 1 Mass Encoder . Server to be provided by the City		
		SubTotal		$27,284.40
1		Extended warranty (year 3,4 and 5) . Including parts, remote support, software updates, 4 preventive maintenance visit per year.	$103,545.00	$103,545.00
		SubTotal		$103,545.00
		Spare Parts		
1		Spare Parts package		
1	LXDP301001	2D scan Honeywell 3310g under f. panel		
1	LXDP271001	Magtek Credit Card Insertion Reader		
1	LXDP121002	Receipt Printer Axiom - int mounted		
1	9945466	NedAp Gen 2 Transit UHF Reader.		
1	APMDP261001	UBA10-SS 500 notes Bill Validator		
1	MSB5K-035	10' Articulating Gate Arm		
1	MSB5N-060	Gate Arm, 10' Straight		
		SubTotal		$7,588.01
		Optional Items not inlcuded in the total project cost **Note- The Optional prices are valid until January 1st 2018 and thereafter are will adjust based on cost to produce labor statistics but will not exceed 3% annual increase of the prices for the remailing 4 years.**		
		Option 1		
1		Installing 18 EMV Readers at all Pay stations (12) and exit stations (6) . (Optional)	$51,280.00	$51,280.00
		Approved Options : Option 1 - YES / NO ;		

Continued on next page

Qty	Item	Description	Unit Price	Ext. Price

TERMS & CONDITIONS

This quotation covers costs that are presently ascertainable. HUB Parking Technology reserves the right to amend this quotation if any unforeseen work is found to be required during the execution of the above scope. This quotation is valid for 60 days.

SubTotal	$915,044.33
Tax	$0.00
Shipping	$2,500.00
Total	$917,544.33

All payments shall be sent to:
HUB PARKING TECHNOLOGY USA INC.
761 Commonwealth Drive
Warrendale, PA 15086

APPROVED

Authorized Signature Date

Name Title

APPROVED

Authorized Signature Date

Name Title

EXHIBIT M

CONTRACTOR'S HARDWARE SALES TERMS

SCHEDULE 1 EQUIPMENT

SCHEDULE 2 PRICES AND PAYMENT SCHEDULE, SOFTWARE LICENSE TERMS

SCHEDULE 1 SOFTWARE

EXHIBIT C INSTALLATION SERVICE TERMS

SCHEDULE 2 PROJECT PLAN

SCHEDULE 3 RATE SCHEDULE AND FEES

Exhibit M

HARDWARE SALES TERMS

1. **EQUIPMENT PROCUREMENT.**

Sale of Equipment. Subject to the terms of the Contract and these Hardware Sales Terms, HUB hereby agrees to sell, assign, convey, transfer and deliver to Customer, and Customer hereby agrees to purchase, receive and accept from HUB, all right (excluding all HUB Intellectual Property Rights), title and interest in and to the hardware equipment, systems and deliverables listed in Schedule 1 of these Hardware Sales Terms (collectively, the "Equipment"). All sales shall be final.

Title to Equipment. Notwithstanding anything to the contrary stated herein, title to and ownership of the Equipment shall remain vested in HUB until receipt by HUB in full of the prices for the Equipment as set forth in Contractor's Proposal and Pricing. Upon receipt of such payment by HUB, title to and ownership of the Equipment shall automatically vest in Customer.

Delivery of Equipment. HUB shall arrange for shipment and delivery of the Equipment F.O.B. Customer's receiving point at Installation Site. .

2. **PAYMENT.** In consideration of the sale of the Equipment, Customer shall pay to HUB the prices as set forth in Contractor's Proposal and Pricing.

3. **SOFTWARE LICENSE AND SERVICES.**

3.1. Software License. Customer acknowledges and agrees that any software that may be embedded in the Equipment as delivered shall be subject to the license grant, restrictions and representation and warranty terms and conditions set forth on Exhibit M Software License Terms of the Agreement.

3.2. Installation Services. Unless Customer has elected to purchase installation services, pursuant to the terms and conditions set forth in Exhibit M "Installation Services Terms" and the Contract, Customer shall be responsible for the installation of the Equipment.

3.3. Other Services. Any other services, such as training or maintenance services, shall be provided by HUB only pursuant to a separate written agreement between the parties.

4. **REPRESENTATIONS AND WARRANTIES.** HUB represents and warrants as follows: (i) for a period of **Twenty Four (24)** months from delivery (the "Warranty Period"), the Equipment will be free from defects in material and workmanship under normal use and will substantially comply and perform in accordance with any documentation or specifications that HUB delivered with the Equipment or that were otherwise agreed upon in writing by the parties; (ii) the Equipment and all of its parts and components are new and unused; (iii) HUB shall not make any substitute for the Equipment of any other model, capacity, or manufacturer without the prior written consent of Customer; and (iv) Customer will acquire good and clear title on the Equipment, free and clear of all liens and encumbrances. With respect to the warranty set forth in clause (i) above, Customer's sole and exclusive remedy for a breach of such warranty, provided that Customer provides HUB with a detailed and accurate written notice of such breach within the Warranty Period, will be for HUB, at HUB's option, to repair or replace the Equipment. In the event HUB determines that it is unable to repair or replace the Equipment, HUB shall refund the purchase price(s) of the Equipment. HUB shall be responsible for all shipping costs related to any Equipment determined by HUB to have been in breach of the warranty set forth in clause (i) above.

SCHEDULE 1
EQUIPMENT

1. **Description of Equipment:**

[Identify each individual piece of Equipment and related component or deliverable by name and version.]

PN	Description	Versions
DP5900-6(LE)	DATAPARK Lane Entry Station STATION LE - The DP Lane Entry Station (LE) is used to control the entry and access of the parking facility by a variety of parker types. Each LE station is equipped with an integral intercom station and NedAp RFID reader. DP equipment allows for barcode technology ticket issuing and processing.	DP2600 v. 2.3.9.7
DP5800-6(LX)	DATAPARK Lane Exit Station LX - The DP Lane Exit Station (LX) allows for payment with credit card, paid ticket from a POF or validation at exit. Each LX station is equipped with an integral intercom sub-station and RFID NedAp reader.	DP2600 v. 2.3.9.7
DP7001M (APS)	DATAPARK Automated Pay Station APS - The DP Automatic Pay station (APS) can accept multiple types of payment: coin, note, credit/debit card, validation. It will dispense change in coin and/or note.	PayStat v.11.1.4.1
DP6001BT (CD)	Coding Station - The Coding Station is a "back-office" station that allows administration staff to create batches of encoded tickets and cards such as discount tickets, day/week passes, etc. It is ideal for creating multiple tickets for shopping center discounts and visitor tickets for business centers, tradeshows, conferences, conventions and hotel stays.	FeeComp v.61.3.3.6
HUB PRO-M-RC010H0	Tall Parking Pro Fixed Flange with Microboom (10' Boom Length) Right Hand Version - Parking Pro-M barriers were specifically designed for highly frequented applications. The Parking Pro-M barriers do not only offer fast opening times, long-life cycle, reliability and quality. Furthermore, they amaze with extraordinary design, extremely low operational costs, easy handling and almost maintenance free technology.	v.0.14r411
800M	VOIP Secure 800 M intercom with Elastic Server - Secure Voice Over IP Intercom will meets the specification included in the RFP document.	v800.01.144

2. Specifications, Performance Standards, and Functional Requirements:

Peripheral Devices
Peripheral devices, such as lane or payment devices, will be networked via TCP/IP to the local network switch and then to the City of Columbia data center. The Parties agree that the City intends to host the software in a virtual environment.

Network Devices
All network devices will be connected to a switch via TCP/IP.

Entering the Facility
The DataPark Lane Entry Station (LE) is used to control the entry and access of the parking facility by a variety of parker types. Each LE station is equipped with an integral intercom station and NedAp RFID reader. DataPark equipment allows for barcode technology ticket issuing and processing.

The LE, and all DataPark, devices receive updated operating system and application software from the server over the network. The Management System server pushes information out to each device and then verifies that all programming was uploaded.

Transient Parkers will either push an illuminated flashing button and be issued a ticket with the time, date, and machine ID encoded on the ticket or insert their credit card. Upon removal of the ticket or credit card read, the device will send a signal to open the gate. Once the parker crosses the closing loop, the gate will close.

If the parker backs out of the lane, the ticket will be retracted and sent to the discarded ticket bin and the transaction will be logged as a Voided Ticket and the gate will close. If the parker pulls out the ticket and then backs out, the ticket will be logged as a Back Out Ticket and the gate will close. If the parker pulls the ticket out, the barrier gate will open. The barrier will continue to stay open as the parker passes over the safety loop. Once the barrier arm returns to the normal position, the transaction will be logged as an Entry Transaction.

Contract Parkers may enter the facility by using their assigned RFID hangtags.

The **DataPark Lane Exit Station (LX)** allows for payment with credit card, paid ticket from a POF or validation at exit. Each LX station is equipped with an integral intercom sub-station and NedAp RFID Reader.

The customer with an entry ticket will enter the exit plaza and the DataPark Lane Exit Station (LX) illuminated display and/or voice annunciation will say "Please scan Ticket". The parker will scan the ticket they received upon entry and the LX will display the amount due. The LX will display "Please scan Validation or insert Credit Card". The customer will insert his credit card and when the fee is satisfied, the credit card will be returned, followed by a receipt printed on a ticket, and a signal will be sent to open the gate. The device will display the amount paid, a receipt will be issued and the credit card returned to the customer. Once the parker has traversed entirely over the safety loop, the gate will close.

Parkers with validations will scan their entry ticket into the LX. The fee will be calculated and the display will show the fee due. The customer will then insert the validation, the fee will be recalculated, display the fee due and prompt the parker to insert his credit card. Once the fee is satisfied and the customer takes their ticket/receipt, the station sends an open signal to the gate.

The **NedAp RFID Reader** will be installed at Exit lane to provide access control for contract parkers.

In order to prevent queuing at exit, parkers may pay for their parking prior to returning to their vehicle and pay at an Automatic PlayStation (Pay-on-Foot). The **DataPark Automatic PlayStation (APS)** can

accept multiple types of payment: coin, note, credit/debit card, validation. Per Client request it will **NOT** dispense change.

Transient Parkers who entered the parking facility by taking a ticket, will scan that same ticket into the APS prior to returning to their vehicle. The fee due will appear on the display and the Parker will satisfy the fee with cash, credit card, debit card and/or validation. Once the fee is satisfied, the paid ticket can be used at the exit station. A programmable grace period will allow the parker to return to their vehicle and exit the facility.

Validations
The Coding Station is a "back-office" station that allows administration staff to create batches of encoded tickets and cards such as discount tickets, day/week passes, etc. It is ideal for creating multiple tickets for shopping center discounts and visitor tickets for business centers, tradeshows, conferences, conventions and hotel stays. One of the benefits of producing bulk validations is that they can be pre-sold before they are used.

VOIP Intercom
We will be using Secure Voice over IP Intercom with Elastic Servers. The proposed intercom system meets the specification included in the RFP document. When a customer requires assistance, the customer presses the help button on the lane device or pay station. The attendant answers the call and enables communication with the customer. The attendant will have the ability to activate the gate remotely or send multiple rates by the click of the mouse on the DataPark computer.

HUB Parking Pro M Barrier Gates
Parking Pro-M barriers were specifically designed for highly frequented applications. The Parking Pro-M barriers do not only offer fast opening times, long-life cycle, reliability and quality. Furthermore, they amaze with extraordinary design, extremely low operational costs, easy handling and almost maintenance free technology.

3. Documentation:

HUB Parking will provide the following user manuals:

1. DataPark Lane Entry Station (LE) User Manual
2. DataPark Lane Exit Station (LX) User Manual
3. DataPark Automatic PlayStation (APS) User Manual
4. DataPark Coding Station User Manual
6. HUB PRO-M-RC010H0 Magnetic Gate User Manual
7. VOIP Secure Intercom User Manual

SCHEDULE 2
PRICES

Please refer to the attached quote

PAYMENT SCHEDULE

1st payment	40% of the project cost with signed contract
2nd payment	50% of the project cost upon equipment delivery
Final payment	Final payment / 10% of the project cost upon the Final Acceptance Date

SOFTWARE LICENSE TERMS

1. GRANT OF LICENSE. Subject to the terms of the Contract and these Software License Terms, and except as may be expressly modified in Schedule 1 of these Software License Terms, HUB hereby grants to Customer, and Customer hereby accepts from HUB, an object code only, perpetual, nonexclusive, worldwide, and nontransferable license (the "License") to use and copy the SOFTWARE products listed in Schedule 1 (the "Software") solely and exclusively for Customer's internal business purposes and the intended purpose of the Software. Customer may make one (1) copy of the Software for its archival purposes. The Software shall be delivered to Customer in a manner as set forth in Schedule 1.

2. RESTRICTIONS. The Software (including without limitation, its structure, organization and source code) constitute valuable trade secrets of HUB and its licensors. Accordingly and except as expressly set forth in Schedule 1, Customer will not, directly or indirectly, without HUB's prior written consent: (i) make more copies of the Software than the number of copies (if any) expressly permitted herein; (ii) cause or permit any reverse engineering, decompilation, modification, translation or disassembly of the Software or otherwise attempt to derive the source code for the Software; (iii) sell, loan, lease, rent, sublicense, distribute, disclose, publish, assign, commercially share (including time share), or otherwise transfer or attempt to transfer any rights in the Software; (iv) use the Software in any manner other than as expressly permitted herein; or (v) do, or permit to be done, anything that would adversely affect HUB's right, title or interest in or to the Software.

3. SERVICES. Unless Customer has elected to purchase installation services, pursuant to the terms and conditions set forth on Exhibit M "Installation Services Terms" of the Agreement, Customer shall be responsible for the installation of the Software. Any other services, such as maintenance and support or training services, shall be provided by HUB only pursuant to a separate written agreement between the parties.

4. LICENSE FEES. In consideration of the License granted hereunder, Customer shall pay to HUB the License fees as set forth in Schedule 2 of these Software License Terms. The Contract Amount in section 3 of the Contract includes all consideration for the Licenses granted hereunder.

5. REPRESENTATIONS AND WARRANTIES. HUB represents and warrants as follows: (i) for a period of **twenty four (24)** months from delivery (the "Warranty Period"), the Software will be free of material programming errors and will operate and conform in accordance with any documentation or specifications that HUB delivered with the Software or that were otherwise agreed upon in writing by the parties; and (iii) any technical documentation delivered to Customer for the Software will be sufficient to allow a reasonably knowledgeable information technology professional to maintain and support the Software, and will accurately describe in terms understandable by a typical end user the functions and features of the Software and the procedures for exercising such functions and features. With RESPECT to the warranty set forth in clause (i) above, Customer's sole and exclusive remedy for a breach of such warranty, provided that Customer provides HUB with a detailed and accurate written notice of such breach within the Warranty Period, will be for HUB, at HUB's option, to repair or replace the Software. In the event HUB determines that it is unable to repair or replace the Software, HUB shall refund any unused portion of the License fees previously paid by Customer hereunder. HUB shall be responsible for all shipping costs related to any Software determined by HUB to have been in breach of the warranty set forth in clause (i) above.

6. GOVERNMENT END USERS. The Software: (i) was developed at private expense, is existing "commercial computer software" and no part of it was developed with government funds; (ii) is a trade secret of HUB for all purposes of the Freedom of Information Act; (iii) is commercial computer software submitted with only those rights provided herein; (iv) in all respects is proprietary data belonging solely to HUB; and (v) is unpublished and all rights are reserved under the copyright laws of the United States.

SCHEDULE 1
SOFTWARE

1. **Licensed Software:**

[Identify each individual Software product licensed hereunder.]

DP 11000 PARS Management Software package includes the following modules:

1. DP Counter
2. DP Revenue Control
3. DP Access Control
4. DP Credit Card
5. DP Event
6. DP Report

2. **Modifications to Scope of License**:

[Identify here any modifications to the scope of the License defined in Section 1]

N/A

3. **Specifications, Performance Standards, and Functional Requirements:**

[Include here any agreed upon specifications, performance standards, and functional requirements for the Software.]

DP 11000 PARS Management Software

The DP11000 PARS Management Software is GUI-based, menu-driven software system through a computer or network of computers and/or servers. The collection, recording, reporting and transmission of information for transactions and device functions are fully reported to the Facility Management System or FMS (and Central Database server, if applicable) as they occur. The operating system of the computers and servers on which the DP11000 operates, is the most recent release of Microsoft Windows operating system.

The software provided by HUB Parking Technology USA, Inc. to operate the PARCS system will be delivered in a ready-to-run form, including all necessary utility programs and documentation. Database Management System (DMS) software is an industry standard such as MS SQL Server 2008 or equivalent for Windows using object-oriented and event-driven programming techniques.

The DP11000 system uses a proprietary database, containing account numbers, card numbers, invoices, payments, etc., which is logically encrypted. The system can be configured to not store credit card information. HUB shall configure the system in a manner that is PCI compliant. Logical OS access control is applied toward accessing it. All other software packages are industry standard to the greatest extent possible. Data exchange with third party software will be possible using standard Open Database Connectivity (ODBC).

- PARCS integrated components as computers and/or servers utilize RAID1 technology as a standard.
- FMS is able to function as "Central Cashier Station". FMS accepts and records parking transactions via media and combination thereof that can be processed at the "Exit Cashier Stations", including credit card (Credit card in/out), debit card, special pass card, and disposable magnetic striped cards/validations.
- DP11000 provides usage of individual multi-level user accounts, with a minimum of 8 access levels, which utilize complex passwords. Individual user accounts indicate that every account used is associated with an individual user and/or process with no use of generic group accounts used by more than one user or process.

The FMS requires the following password complexity is enforced for compliance:

- Passwords must be at least 7 characters, must include both numeric and alphabetic characters and cannot be the same as the last 4 passwords
- Passwords must be changed at least every 90 days
- If an incorrect password is provided 6 times the account should be locked out
- Account lock out duration should be at least 30 minutes (or until an administrator resets it)
- Sessions idle for more than 15 minutes should require re-entry of username and password to reactivate the session.
- PARCS utilizes Windows OS logical access control allowing 50 or more concurrent user profiles to be used, controlled by system administrator.

FMS supports networked alert system with low, medium and high priority customizable alarms. Logical access controls are applied toward user access rights. In addition, the system is capable of forwarding alarms to pre-defined users via e-mail, SMS text message at predetermined times and frequencies.

The system software settings, information, data received or generated by the PARCS are recorded to a Log File that is replicated or backed-up to a data tape or digital storage medium in a readily accessible read-only format. Systems retain/store data for at least 5 years.

The FMS logical access control identifies all employees and managers, and PARCS maintenance personnel, and each Transaction and the data entry (normal or abnormal) is attributed to the individual responsible for an action. The FMS allows the operator to document and explain, in writing, any operational and/or reporting based discrepancies or differences. The FMS logical access control identifies whenever any software program is altered and by whom.

DP11000 utilizes a networked reporting module that allows users to set an automatic batch and/or print of identified reports to pre-defined local and/or network printers.

DP11000 utilizes programmable "Turn around Grace Period", "PIL Courtesy Time", and "Grace Period".

DP11000 supports a scheduled rate change module allowing the accommodation of varying rate structures within single and multiple facilities. The DP11000 incorporated validation program provides for the creation and processing of validations. All validation types are operator configurable and exceed the specified validation types. The validation structure includes, but is not limited to the following parameters:

- Fixed amount
- Fixed time amount deducted from the beginning of time parked
- Fixed time amount deducted from the end of time parked
- Percent calculation type applied as discount percentage of the calculated fee.
- One time Free/Complimentary Exit
- Fee switch to a different fee structure, such as: Fee reduction to a fixed amount or zero if certain time parameter is met
- Fee limitation to a fixed maximum at any time or if certain time parameter is met
- Full validation
- Full validation if parked in nested area
- Fee charged according to a rate table or extra fee added to regular rate if time limit between exit of nested area and exit of main area exceeded
- Free exit to/after time set
- Daily or Event Surcharge

As a fully networked and WEB system, FMS is accessible via secured WEB application, such as IE or VPN and at CMC.

The DP11000 Occupancy Monitoring System provides automatic, remote, and manual control of the gates, full signs, exit directing signs, reversing lane switchovers and other devices. The counting system records and reports every entry of a vehicle into the parking facility and subsequently records further movements into and out of specified nested areas within the parking facility and then records all vehicle exits. The counting system is based on loop triggering events and is a basis for the control of gates, signs, and lane functions at critical entry/exit points throughout the system.

DP11000 utilizes a Global Validation program accessible from FMS and/or CMC, configurable via a logical access system that allows authorized users to create/program global and/or local validations, global and/or local discount coupons, and global and/or local access cards.

System software settings, information, and data received or generated by the PARCS are recorded to a Log File that is replicated or backed-up to a pre-defined remote computer (Database server).

Database Management System (DMS) software is an industry standard such as MS SQL Server 2008 or equivalent for Windows using object-oriented and event-driven programming techniques. DP11000 system uses a logically encrypted, proprietary database, containing account numbers, card numbers, invoices, payments, etc. Logical OS access control is applied toward accessing it. All other software packages are industry standard to the greatest extent possible. Data exchange with third party software will be possible using standard Open Database Connectivity (ODBC).

DP11000 assigns a 17 digit non-resettable number to each transaction that includes lane number, transaction number, date and time of transaction.

4. **Documentation:**

[Identify here all user manuals and other documentation concerning the Software.
HUB Parking will provide the following user manuals:

DP 11000 PARCS Management Software manual

SCHEDULE 2
LICENSE FEES

N/A

INSTALLATION SERVICES TERMS

This Installation Services Terms document ("Installation Services Terms") is appended to, and incorporated by reference into, the Contract between HUB Parking Technology USA, Inc., a Delaware corporation with its principal offices located at 761 Commonwealth Drive, Suite 204, Warrendale, PA 15086 ("HUB") and Customer.

Unless expressly stated otherwise, the terms and conditions set forth in the Contract will apply to any sale under these Installation Services Terms. Unless otherwise defined herein, any capitalized terms herein will have that meaning given to them in the Contract. .

1. **INSTALLATION SERVICES AND PROJECT PLAN.** Subject to the terms of the Contract and these Installation Services Terms, HUB shall install the hardware and/or software listed in Exhibit L of the Contract and Schedule 1 of Exhibit M (collectively, the "Equipment"). HUB shall perform the installation services for the equipment (the "Installation Services") in accordance with the project plan attached as Schedule 2 of these Installation Services Terms (the "Project Plan"). The Project Plan may include: (i) a concise statement of the scope of work and objectives; (ii) detailed descriptions of the relevant installation site (the "Installation Site") and tasks; (iii) the implementation plans and high level work plans that set forth for each task noted therein the planned start date, completion date, level of resources required from each party, and the deliverables (if any) to be delivered upon task completion; (iv) a designation of the responsibility for each task; (v) a schedule for such activity, including any key milestones; (vi) a staffing plan for such activity; and (vii) acceptance criteria. The Project Plan has been prepared by HUB and approved by Customer. The Project Plan may be revised upon the mutual written agreement of the parties. The Project Plan shall remain in effect until (a) it is terminated by mutual agreement of the parties or as otherwise provided in the Agreement, (b) it has expired on its own terms, or (c) the Installation Services have been completed in accordance with the Project Plan, whichever is sooner.

2. **DELIVERY AND INSTALLATION.**

   2.1. HUB shall arrange for delivery of the Equipment to the Installation Site in accordance with the Project Plan. Shipment of the Equipment shall be F.O.B. Customer's receiving point at the Installation Site.

   2.2. HUB shall be responsible for moving the Equipment from Customer's receiving point to the Installation Site and shall bear the risk of loss or damage to the Equipment while in transit from Customer's receiving point to the Installation Site. Customer shall bear all risk of loss or damage to the Equipment after delivery thereof to the Installation Site, unless such loss or damage is due to negligence or willful acts of HUB, its employees, agents or representatives, defects in the Equipment or any cause for which HUB is responsible hereunder. After delivery to the Installation Site, HUB shall install the Equipment as set forth in the Project Plan and bring it to operational status in accordance with its documentation and any other specifications or acceptance criteria as expressly set forth in the Project Plan and the Contract.

3. **MANAGEMENT AND COORDINATION OF PROJECT PLAN.**

   3.1. Project Management. In order to perform the Installation Services as set forth in the Project Plan in an organized, coordinated and efficient manner: (i) Customer shall designate a management official, reasonably acceptable to HUB (the "Project Sponsor") who will have overall responsibility on behalf of Customer for execution of the Project Plan, for coordinating the execution of the Project Plan with HUB, for acting as a day-to-day contact with the Project Executive (as defined below) and for making available to HUB the data, facilities, resources and other support services required from Customer to enable HUB to perform the Installation Services in a timely and accurate manner; and (ii) HUB shall designate a management official, reasonably acceptable to Customer (the "Project Executive"), who will have primary operational responsibility for HUB's performance of the Installation Services, including supervising all HUB personnel and other technical resources used in performing the Installation Services, and will serve as day-to-day contact with the Project Sponsor.

   3.2. Change Management. The Project Sponsor and the Project Executive may propose, accept and implement changes to technical or scheduling aspects of the Project Plan by signing amendments thereto setting forth such changes, provided that such changes do not affect the Installation Services, fees or reimbursements agreed upon hereunder, or materially change the Installation Services. Any change to the Installation Services under the Project Plan, or the fees or reimbursements to be paid to HUB hereunder, must be agreed to by the parties and set forth in writing in an addendum or change order to the Project Plan. Any change that results in an increase in the Contract Amount may only be authorized by the Parties through a contract amendment. If at any time HUB or Customer believes that services or activities that are in addition to or inconsistent with the Installation Services are desirable or

necessary, that party shall notify the other party and shall submit a proposal to the other party that describes the terms of the Project Plan that are affected and the additional or inconsistent services proposed. If such proposal is approved by the other party, the authorized representatives of HUB and Customer shall execute an addendum applicable to the Project Plan and incorporate such proposal into the Project Plan.

3.3. Staff Composition. HUB and Customer each shall appoint an initial staff as set forth in, or otherwise as reasonably required by, the Project Plan. Any proposed changes to staffing will thereafter be discussed by Customer and HUB and the parties will cooperate to minimize any adverse impact on the scheduled time and projected cost of the Installation Services to be completed under the Project Plan. However, each party acknowledges that their respective businesses may, from time to time, require reallocation of personnel and that resignations and personal hardships may require the alteration of project staffs.

3.4. Employees and Subcontractors. Notwithstanding anything to the contrary, HUB reserves the right to determine in its sole discretion which of its personnel shall be assigned to perform the Installation Services and to replace or reassign such personnel; provided, however, that HUB shall, subject to scheduling and staffing considerations, attempt to honor Customer's requests that specific individuals participate in work to be performed under the Project Plan. HUB may employ subcontractors in the performance of the Installation Services as set forth in section 15 of the Agreement.

4. CUSTOMER RESPONSIBILITIES. Customer shall: (i) (reserved)(ii) provide HUB, in a timely fashion, with all information reasonably required for the performance of the Installation Services, and Customer agrees that all such information shall be accurate and that HUB may rely on the accuracy of such information in providing the Installation Services; (iii) provide HUB with reasonable access, and assure reasonable rights of ingress and egress, to Customer's premises as necessary for the performance of the Installation Services; (iv) cooperate fully with HUB in HUB's provision of the Installation Services; (v) provide adequate resources in accordance with the Project Plan to participate in or facilitate the performance of the Installation Services; (vi) participate in any training sessions that HUB, in its reasonable discretion, deems necessary; (vii) timely participate in any meetings for which the Project Plan provides or that HUB, in its reasonable discretion, deems necessary and make Customer's personnel readily available for such meetings; (viii) assign personnel with relevant training and experience to work in consultation with HUB's personnel to execute the Project Plan; (ix) diligently perform any task assigned to Customer in the Project Plan in a diligent and professional manner in accordance with any related provisions set forth in the Project Plan; and (x) preserve, safeguard, and maintain any equipment or other deliverables or property brought onto the Installation Site by HUB in connection with, or otherwise during, the performance of the Installation Services (collectively, the "Property"). If any loss, damage, theft or destruction occurs to the Property during the Installation Services, except as a result of HUB's negligence or other misconduct, Customer shall promptly repair or replace, at Customer's sole cost and expense and to HUB's reasonable satisfaction, the affected Property.

5. SERVICE AND OTHER FEES. Unless provided otherwise in the Project Plan, as compensation for the Installation Services and for the discharge of HUB's related obligations under the Project Plan, Customer shall pay HUB's fees as set forth in the Contract. For noncovered work authorized in writing by the Customer, HUB shall invoice Customer in accordance with the rate schedule attached as Schedule 3 of these Installation services Terms; provided, however, that HUB shall be entitled to change such rate schedule for noncovered work, effective upon thirty (30) days' written notice to Customer at any time during the term of the Agreement. Unless provided otherwise in the Project Plan or in the Contract, Customer shall promptly reimburse HUB for its reasonable expenses, including the actual costs for travel, living and miscellaneous expenses, incurred by HUB in performance of the authorized noncovered work related to Installation Services or otherwise in connection with the execution of the Project Plan.

6. REPRESENTATIONS AND WARRANTIES. HUB represents and warrants as follows: (i) the Installation Services will be performed with promptness and diligence and will be executed in a workmanlike and professional manner, in accordance with the practices and high professional standards used in well-managed operations performing services similar to the Services and in accordance with these Installation Services Terms and the Project Plan; and (ii) HUB shall use adequate numbers of qualified individuals with suitable training, education, experience and skill to perform the Installation Services.

SCHEDULE 2
PROJECT PLAN

PROJECT PLAN OVERVIEW

Immediately after the notice to proceed, an internal meeting will be held to prepare for the project. The Project Manager will be allocated and assumes control of the project.

The Project Manager will prepare the project plan which will include:

- Procurement
- Communications Management Plan
- Project Schedule including Milestones
- Test Plan
- Design and Development Plan
- Change Management Plan
- Procurement Management Plan
- Project Scope (Scope Of Works)
- Risk Assessment
- Safety Plan

At the first meeting with the customer, The Communications Plan, Project Scope, Change Management, Milestones and Schedule will be discussed and agreed.

After this meeting, the HUB Project Manager will complete the plans with the project team. Equipment and services will be ordered during the initial days of Phase 1 in accordance with the Procurement Plan.

HUB uses a web based online project management tool "BASECAMP" as an instrumental tool to communicate the project goals, documentation, questions, and schedules. All participants of the project will receive a login for usage of the system that they can access from a browser.

Basecamp has the ability to control documents, calendars, RFI/Questions, 'to do' lists and schedules. Items such as copies of Gantt charts can be uploaded and made available to the team. When items are uploaded, email notifications are sent out. Additionally, a user can subscribe to a daily digest that is sent out daily.

Procurement Management Plan

The Project Manager will be responsible for management of equipment supply, any selected vendor or external resource. The Project Manager will also measure performance as it relates to the vendor providing necessary goods and/or services and communicate this to the project team.

The Project Manager will identify items to be purchased, ensure that these meet the required schedule, and identify any critical items that may affect milestones and risk assessment.
Sub-Contractor Purchase Orders will also be defined and include:

- Scope of works
- Schedule and milestone requirements
- Site specific installation requirements
- Contractual requirements

Communications Management Plan

The Project Manager will work with the customer to draw up a communication plan. This plan will include project meetings, attendees and frequency. Depending on the meeting type, these meetings will be either via phone / conference call, onsite or internal meeting at our facility.

Schedule and Milestones

HUB Parking is no stranger to working with groups in the coordination, scheduling and commissioning of new parking access and control systems throughout the US and internationally. Recognizing the sensitivity and

importance in delivering and installing systems to meet our customer's expectation, HUB is well aware of ensuring that these efforts are fully communicated with our customers.

The Project Milestones are established with the customer and identified within the project plan along with actions to be taken if changes are required. These milestones are also outlined within the project schedule.

Major milestones will be identified in the Project Plan in the form of a table (sample below).

Task	Month 1	Month 2	Month 3
Milestone - Project Signoff	♦		
Kickoff meeting all stakeholders determine all goals for hardware and software implementation. Define and initiate any development projects if needed.	♦		
Meet with Owner's Representatives and Subcontractors to determine equipment placement and coordinate electrical and concrete work.	♦		
Meet with Owner's IT to determine the availability and timelines for installing network and server equipment	♦		
Produce all necessary shop drawings and deliver to the Owner and Subcontractors		♦	
Equipment manufactured		♦	
Milestone - Equipment Delivery		♦	
Equipment unpacking and integrity check after delivery. Verifying all necessary components is accounted for.		♦	
Completing low voltage cable installations / overhead door		♦	
Deliver Testing Plan and Schedule to the Owner for approval		♦	
Installation of office, server, computer and network hardware		♦	
Bolt down lane equipment, Pay Stations, Entry / Exit Stations		♦	
Complete all low voltage terminations		♦	
Installation and configuration of all software (including server, database and credit cards)			♦
Complete all peripheral and lane controller programming and set up			♦
Commence Testing of Equipment			♦
Milestone - Substantial Project Completion			♦
Personnel Training and Certification on proper operation and maintenance.			♦
Milestone - Go Live			♦

HUB Parking utilizes Microsoft Project to create a schedule for use within the project. The Gantt chart will outline all of the project phases including work processes, resources and milestones. The Project Manager will be responsible for keeping this schedule updated and will circulate it to the project team as detailed in the communication plan.

Project Scope (Scope of Work)

The Scope of Work will be finalized detailing the deliverables and expectations of the project and who is responsible for each part. The Scope will include the items from the RFP response and detail further each deliverable.

Risk Assessment

Once the scope of work is defined, a risk analysis is performed on the project to determine the risk for each process / deliverable.

- What could possibly go wrong?
- What is the likelihood of it happening?
- How will it affect the project?
- What can be done about it?

Each risk is included in the Risk Matrix and assigned a probability and severity, along with a recommended action plan. This register is kept up to date during the life of the project and should an issue arise, the project team is notified.

Example of Risk Assessment Matrix

	[illegible]			[illegible]
Damage to a piece of equipment in transit	1	3	3	Utilize stock equipment in warehouse to replace component
Vender of "X" component not able to supply device to meet scheduled requirement	2	4	8	Alternative vender is already approved. New PO to be created and existing PO canceled.

Multiplying the probability with the severity derives the score. The lowest score = 1 and highest =25. High scores will result in a pre-approved action plan while lower risks are dealt with as the issue occurs or the score increases.

Each risk is scored and the highest results will be allocated an action plan and if necessary, the customer is made aware of the risk.

Design and Development Plan

Each project is evaluated for its requirements. Elements include:

- Software Development
- Infrastructure Requirements
- Conduit Modification Plan

Change Management Plan

Changes occur for several reasons; these can include customer requirements, unforeseen circumstances, or product substitution.

Each change is analyzed for cost and schedule impact. The team will discuss the implications and track these changes. The customer will be notified of these impacts and approval will be required before proceeding.

Each Change Order Request will be given an ID and tracked on the Change Order Log.

Installation

HUB and the subcontractors will meet prior to installation to discuss the installation phase. The Project Manager will then authorize the installation. In accordance with the Project Management Plan and Installation Plan, the installation team will be given the schedule. The customer will be consulted to draw up a traffic plan to ensure a smooth installation to reduce the inconvenience to the customer and or its patrons.

Installation will follow pre-authorized cabling requirements and connections to ensure the equipment is installed, commissioned, tested and placed into service as quickly and conveniently as possible.

Safety Plan

A Safety Plan will be drawn up and reflect all activities and ensure that safety is of the utmost importance. All parties, including subcontractors, will provide input that will ensure that all people visiting the site observe the company, OSHA, and customer specific requirements. The Plan will include safety considerations and requirements for each work process.

Quality Control

For the installation, a quality baseline is determined within the project design specification; it includes installation standards, standard equipment performance, and any customer specific requirements as detailed in the RFP response. This ensures that during testing, expectations are met.

Summary of any arrangements the Firm may be making with any other firm for assistance on this work project.

For all of the civil work (electrical /conduit / cables / concrete) requested in this RFP we are planning to use a local Electrical Company – Mid Missouri Electric, .Inc. located at 1917 Paris Road, Columbia, MO 65201. Contact person Larry Stales, President; phone: 573-875-1545 / email: larry@midmissourielectric.com

SCHEDULE 3
RATE SCHEDULE AND FEES FOR NON-COVERED WORK

Hours of Operation and Service Rates for Non-Covered Work

Normal Business Hours (Mon – Fri 8:30 am to 5:00 pm)	$120.00 per hour / 1 hour minimum
After Hours (Weekdays) (Mon – Fri 5:01 pm – 8:29 am)	$180.00 per hour / 1 hour minimum
Weekends and Holidays (24 hours per day)	$240.00 per hour / 1 hour minimum